(12) PATENT ABRIDGMENT (11) Document No. AU-B-12591/88
(19) AUSTRALIAN PATENT OFFICE (10) Acceptance No. 608812

(54) Title
ROTARY-VALVE RACK AND PINION POWER STEERING GEAR HOUSING

International Patent Classification(s)
(51)[4] **B62D 005/22** **B62D 005/083**

(21) Application No. : **12591/88** (22) Application Date : **03.03.88**

(30) Priority Data

(31) Number (32) Date (33) Country
023784 **09.03.87** **US UNITED STATES OF AMERICA**

(43) Publication Date : **08.09.88**

(44) Publication Date of Accepted Application : **18.04.91**

(71) Applicant(s)
GENERAL MOTORS CORPORATION

(72) Inventor(s)
JOHN HENRY ROBINSON; DONALD ROBERT BURNHAM

(74) Attorney or Agent
PHILLIPS ORMONDE & FITZPATRICK, 367 Collins Street, MELBOURNE VIC 3000

(56) Prior Art Documents
US 4454801

(57) Claim

1. A composite housing for a rotary-valve rack and pinion power steering gear, comprising:

a pinion housing portion fabricated from a light-weight first metal;

a pinion bore formed in the pinion housing portion, the pinion bore being aligned on a pinion axis of the pinion housing portion;

a right circular cylindrical valve housing portion fabricated from a second metal that is more dense and abrasion-resistant than the first metal;

a counterbore formed in an end surface of the pinion housing portion around an end of the pinion bore, the counterbore providing an inner cylindrical surface aligned on the pinion axis;

an injection moulding passage formed in the pinion housing portion;

a first annular groove formed in the inner cylindrical surface of the counterbore and connected to the injection moulding passage;

.../2

an annular neck formed on the valve housing portion and having an outer cylindrical surface;

a second annular groove formed in the outer cylindrical surface of the valve housing portion, the annular neck on the valve housing portion being received in the counterbore in the pinion housing portion with an interference press fit between the inner cylindrical surface and the outer cylindrical surface, and with the first annular groove overlapping at least a portion of the second annular groove and co-operating therewith in defining an annular ring chamber; and

in-situ injection-moulded retaining and seal means in the passage means and in the ring chamber forming a retaining ring redundantly inhibiting withdrawal of the valve housing portion from the pinion housing portion and sealing the interface between the inner and the outer cylindrical surfaces.

3. A method of forming a composite housing for a rotary-valve rack and pinion power steering gear, comprising the steps of:

formir pinion housing portion from a light-weight first metal;

forming a pinion bore in the pinion housing aligned on a pinion axis of the pinion housing portion;

forming a right circular cylindrical valve housing portion from a second metal that is more dense and abrasion-resistant than the first metal;

forming a counterbore in an end surface of the pinion housing portion around an end of the pinion bore defining an inner cylindrical surface aligned on the pinion axis;

forming an injection moulding passage in the pinion housing portion;

forming a first annular groove in the inner cylindrical surface of the counterbore connected to

the injection moulding passage;

forming an annular neck on the valve housing portion having an outer cylindrical surface;

forming a second annular groove in the outer cylindrical surface of the annular neck;

connecting the valve housing portion to the pinion housing portion by press-fitting the annular neck into the counterbore with an interference fit between the inner cylindrical surface and the outer cylindrical surface, and with the first annular groove overlapping at least a portion of the second annular groove and co-operating therewith in defining an annular ring chamber; and

in-situ injection-moulding a retaining and seal ring in the ring chamber, thereby redundantly inhibiting withdrawal of the valve housing portion from the pinion housing portion and sealing the interface between the inner and the outer cylindrical surfaces.

AUSTRALIA

Patents Act

608812

COMPLETE SPECIFICATION
(ORIGINAL)

	Class	Int. Class
Application Number:		
Lodged:		

Complete Specification Lodged:
Accepted:
Published:

Priority

Related Art:

This document contains the amendments made under Section 49 and is correct for printing.

APPLICANT'S REFERENCE: JNBB/LF/3023 Aust.

Name(s) of Applicant(s):

General Motors Corporation

Address(es) of Applicant(s):

Grand Boulevard,
Detroit,
Michigan,
UNITED STATES OF AMERICA.

Address for Service is:

PHILLIPS ORMONDE & FITZPATRICK
Patent and Trade Mark Attorneys
367 Collins Street
Melbourne 3000 AUSTRALIA

Complete Specification for the invention entitled:

ROTARY-VALVE RACK AND PINION POWER STEERING GEAR HOUSING

Our Ref : 85370
POF Code: 1221/1695

The following statement is a full description of this invention, including the best method of performing it known to applicant(s):

JNBB/3023

ROTARY-VALVE RACK AND PINION POWER STEERING GEAR HOUSING

This invention relates to a housing for an automotive rack and pinion power steering gear as specified in the preamble of claim 1.

In US-A-4 454 801 there is described a rotary-valve rack and pinion power steering gear having a single, one-piece die-cast aluminium outer housing which supports a pinion shaft and the rotary valve. One-piece die-cast outer housings are attractive for minimising weight and maximising manufacturing efficiency. However, for the purpose of maximising resistance to abrasion by internal moving parts, such as elements of the rotary valve, and also minimising potential wall porosity around the rotary valve, it would be desirable for the portion of the housing around the rotary valve to be fabricated from a more dense and abrasion-resistant material, such as ferrous metal. For this purpose, rotary-valve rack and pinion power steering gears have been proposed which include separate, bolted-together pinion and valve housings.

The present invention is concerned with providing a composite housing for an automotive rack and pinion power steering gear which represents an improvement over the prior bolted-together housings.

More specifically, the present invention is concerned with providing a composite housing for an automotive rack and pinion power steering gear which is economical to manufacture and which has a valve housing portion of a more dense and abrasion-resistant metal than the remaining portions of the steering gear housing.

Accordingly, by the present invention there is provided a composite housing for a rotary-valve rack and pinion power steering gear, comprising:

a pinion housing portion fabricated from a light-weight first metal;

a pinion bore formed in the pinion housing portion, the pinion bore being aligned on a pinion axis of the pinion housing portion;

a right circular cylindrical valve housing portion fabricated from a second metal that is more dense and abrasion-resistant than the first metal;

a counterbore formed in an end surface of the pinion housing portion around an end of the pinion bore, the counterbore providing an inner cylindrical surface aligned on the pinion axis;

an injection moulding passage formed in the pinion housing portion;

a first annular groove formed in the inner cylindrical surface of the counterbore and connected to the injection moulding passage;

an annular neck formed on the valve housing portion and having an outer cylindrical surface;

a second annular groove formed in the outer cylindrical surface of the valve housing portion, the annular neck on the valve housing portion being received in the counterbore in the pinion housing portion with an interference press fit between the inner cylindrical surface and the outer cylindrical surface, and with the first annular groove overlapping at least a portion of the second annular groove and co-operating therewith in defining an annular ring chamber; and

in-situ injection-moulded retaining and seal means in the passage means and in the ring chamber forming a retaining ring redundantly inhibiting withdrawal of the valve housing portion

from the pinion housing portion and sealing the interface between the inner and the outer cylindrical surfaces.

The invention thereby makes available a new and improved composite housing for a rotary-valve rack and pinion power steering gear.

The new and improved composite housing preferably includes a pinion housing portion fabricated from a light-weight first material, such as aluminium, and a valve housing portion fabricated from a second, more dense and abrasion-resistant material, such as ferrous metal, the pinion housing portion and the valve housing portion being rigidly connected together without the use of bolts by means of an interference press fit which is sealed and redundantly protected against failure by an in-situ injection-moulded plastics retaining ring.

In a preferred embodiment of a power steering gear housing in accordance with the present invention, the pinion housing portion includes a pinion bore aligned on an axis of the housing, and a cylindrical counterbore around the pinion bore in an end surface of the housing. The valve housing portion is a right circular cylinder having a neck at one end which is pressed into the counterbore to rigidly and non-rotatably connect the valve housing portion to the pinion housing portion. Injection-moulding passages in the pinion housing portion connect to a first annular groove in the inner cylindrical surface of the counterbore. An annular groove in the facing surface of the neck of the valve housing portion overlaps the annular groove in the pinion housing portion and co-operates therewith in defining an annular ring chamber. Curable plastics material is injected into the ring

chamber through the moulding passages, and when cured operates as a retaining ring and seal which redundantly prevents separation of the valve housing portion from the pinion housing portion and also inhibits migration of moisture and contamination into the interior of the steering gear.

An inner cylindrical surface on the neck of the valve housing portion supports a sleeve bearing which provides intermediate support for the pinion shaft.

By the present invention there is also provided a method of forming a composite housing for a rotary-valve rack and pinion power steering gear, comprising the steps of:

forming a pinion housing portion from a light-weight first metal;

forming a pinion bore in the pinion housing aligned on a pinion axis of the pinion housing portion;

forming a right circular cylindrical valve housing portion from a second metal that is more dense and abrasion-resistant than the first metal;

forming a counterbore in an end surface of the pinion housing portion around an end of the pinion bore defining an inner cylindrical surface aligned on the pinion axis;

forming an injection moulding passage in the pinion housing portion;

forming a first annular groove in the inner cylindrical surface of the counterbore connected to the injection moulding passage;

forming an annular neck on the valve housing portion having an outer cylindrical surface;

forming a second annular groove in the outer cylindrical surface of the annular neck;

connecting the valve housing portion to the pinion housing portion by press-fitting the annular neck into the counterbore with an interference fit between the inner cylindrical surface and the outer cylindrical surface, and with the first annular groove overlapping at least a portion of the second annular groove and co-operating therewith in defining an annular ring chamber; and

in-situ injection-moulding a retaining and seal ring in the ring chamber, thereby redundantly inhibiting withdrawal of the valve housing portion from the pinion housing portion and sealing the interface between the inner and the outer cylindrical surfaces.

In the drawing:

Figure 1 is a partially broken-away perspective view of a rotary-valve rack and pinion power steering gear having a preferred embodiment of a composite housing in accordance with the present invention; and

Figure 2 is an enlarged sectional view, with parts in elevation, generally along the plane indicated by the line 2--2 in Figure 1, in the direction of the arrows.

With reference now to Figure 1 of the drawing, a rotary-valve automotive rack and pinion power steering gear 10 is illustrated and described herein only to the extent necessary to establish the environment of the composite housing in accordance with the present invention, the steering gear 10 itself being described in detail in the aforesaid US-A-4 454 801.

As is shown in Figure 1 of the drawing, the steering gear 10 includes a power cylinder 12

together with a composite housing 14 in accordance with the present invention. The power cylinder 12 is part of a power-assist fluid motor of the steering gear, the fluid motor further including a piston 16 slidable in the power cylinder 12 and a piston rod 18 rigidly connected to the piston 16. The piston 16 divides the internal volume of the power cylinder 12 into a pair of variable-volume working chambers 20 and 22. The power cylinder 12 is rigidly attached to the left-hand end of a tubular rack guide section 24 of a pinion housing portion 26 of the composite housing 14. The pinion housing portion 26 is fabricated of a light-weight, easily die-cast material such as aluminium. The right-hand end of the piston rod 18 is rigidly connected to the left-hand end, not shown, of a steering rack 28 having an array of rack teeth 30 thereon. The steering rack 28 is supported in the rack guide section 24 for translation in a direction longitudinally of the rack guide section.

As is seen in Figures 1 and 2 of the drawing, the rack guide section 24 is an integral extension of the pinion housing portion 26, which further includes a main body 32 defining a pinion axis 34. The main body 32 has a pinion bore 36 therein aligned on the axis 34. The pinion bore 36 extends between an upper end surface 38 of the main body 32 and a lower end surface 40 thereof. The steering rack 28 crosses and partially overlaps the pinion bore 36. An adjuster plug 42 is slidably disposed in an appropriate bore in the main body behind the steering rack 28 and, under the urging of a spring 44, biases the steering rack towards the pinion bore 36. The main body 32 is enlarged adjacent the upper end surface 38 thereof to provide

sufficient material for a cylindrical counterbore 46 in the end surface 38 around the pinion bore. The counterbore 46 defines an inner cylindrical surface 48 aligned on the axis 34.

The composite housing 14 further includes a rotary valve housing portion 50. The valve housing portion 50 is fabricated as a right circular cylinder from a more dense and abrasion-resistant material, such as ferrous metal, than the material of the pinion housing portion 26. The valve housing portion 50 has a cylindrical wall 52 which terminates at one end in an annular neck 54. The wall 52 has a machined inner surface 56, and the neck 54 has a machined outer surface 58 and a concentric machined inner surface 60. The valve housing portion 50 is aligned on the axis 34, and the neck 54 is press-fitted into the counterbore 46 until a shoulder on the valve housing portion 50 at the end of the neck 54 abuts the upper end surface 38 on the pinion housing portion 26. The diameter of the outer surface 58 exceeds the diameter of the inner surface 48 of the counterbore 46 by a predetermined amount sufficient to ensure maintenance of an interference fit between the two housing portions at all anticipated operating temperatures of the steering gear 10.

A pinion shaft 62, having a plurality of pinion gear teeth 64 thereon, is supported on both the pinion housing portion 26 and the valve housing portion 50 for rotation about the pinion axis 34. The pinion gear teeth 64 mesh with the rack teeth 30 on the steering rack 28. The pinion shaft 62 is supported at one end on the pinion housing portion 26 by means of a ball bearing 66, and is supported at the other end on the valve housing portion 50 by

means of a sleeve bearing 68 on the inner surface 60 of the neck 54.

A stub shaft 70 is aligned on the pinion axis 34 and is supported on the valve housing portion 50 for rotation about the pinion axis by means of a bearing 72 on a ring 73 seated against the inner surface 56 of the wall 52. A torsion rod 74 is disposed within the stub shaft and has one end rigidly connected to the stub shaft outside the valve housing portion 50 and the other end spline-connected at 76 to the pinion shaft 62.

A rotary valve 78 is disposed in the valve housing portion 50, and includes a valve sleeve 80 rotatable about the axis 34 relative to the inner cylindrical surface 56 of the valve housing portion. The valve sleeve 80 is connected to the pinion shaft 62 by way of a radial pin 82, shown in Figure 2, whereby the valve sleeve rotates as a unit with the pinion shaft. The valve sleeve 80 has a plurality of outer grooves 84 facing the inner cylindrical surface 56, and the grooves 84 are flanked by a corresponding plurality of seal rings 86 disposed in appropriate grooves in the valve sleeve and slidably engaging the inner cylindrical surface 56 of the valve housing portion 50.

As is best seen in Figure 2, an innermost end 88 of the stub shaft 70 within the valve housing portion 50 projects into an annular flange 90 on the adjoining end of the pinion shaft 62. A lost-motion connection 92 is established between the innermost end 88 and the flange 90 to permit limited rotation of the stub shaft relative to the pinion shaft 62 but to interconnect the two in the event that relative rotation exceeds a predetermined included angle.

In addition, the innermost end 88 of the

stub shaft is rotatably journalled on a cylindrical end 94 of the torsion rod 74 within the stub shaft by means of a sleeve bearing 98.

An outer surface 100 of the stub shaft 70 within the valve housing portion operates as the spool of the rotary valve 78, and to that end has a plurality of axially extending grooves 102 therein which co-operate with a corresponding plurality of internal grooves 104 in the sleeve to selectively pressurise and exhaust the working chambers 20 and 22 of the fluid motor by way of a pair of conduits 106, shown in Figure 1, which extend between the power cylinder 12 and appropriate fittings, not shown, on the valve housing portion 50.

The dense and abrasion-resistant material from which the valve housing portion 50 is fabricated resists abrasion by the valve sleeve 80 and the seal rings 86, and has superior porosity characteristics which render the valve housing portion virtually impermeable to the pressurised fluid around the rotary valve 78 throughout the service life of the power steering gear 10.

As is best seen in Figure 2, the main body 32 of the pinion housing portion 26 has a plurality of radially extending injection-moulding passages therein, only a single passage 108 being illustrated in Figure 2, which passages communicate with a first annular groove 110 in the inner cylindrical surface 48 of the counterbore 46. A second annular groove 112 in the outer cylindrical surface 58 on the neck 54 of the valve housing portion 50 faces and overlaps the first annular groove 110. The first and second annular grooves 110 and 112 co-operate to form a hollow annular ring chamber. A quantity of curable plastics material 114, such as polyamide material

(nylon), is injected under pressure into the moulding passages 108 and into the ring chamber. After curing, this material forms a retaining ring 116 between the pinion housing portion 26 and the valve housing portion 50. The retaining ring 116 operates as a back-up for the interference fit between the pinion housing portion 26 and the valve housing portion 50, to prevent relative separation of these two.

In addition, because the injected material is forced into intimate contact with all surfaces defining the ring chamber, the retaining ring 116 also acts as a moisture and contamination-inhibiting seal at the interface between the inner cylindrical surface 48 of the counterbore 46 on the pinion housing portion 26 and the outer cylindrical surface 58 on the neck 54 of the valve housing portion 50.

Finally, because the injected material interlocks with surface irregularities in the groove 112, due to shrinkage during cure, the retaining ring 116 functions as a redundant anti-rotation lock between the valve housing portion 50 and the pinion housing portion 26.

To summarise, therefore, in the described embodiment of a housing for a rotary-valve rack and pinion power steering gear in accordance with the present invention a composite housing (14) of the steering gear comprises a pinion housing portion (26) made of a first metal such as aluminium and a rotary-valve housing portion (50) made of a more dense metal such as ferrous metal. The valve housing portion has a neck pressed into a bore in the pinion housing portion, with facing grooves (112 to 114) in the valve housing portion and the pinion housing portion respectively being filled with an

injection-moulded plastics retaining ring (116) that acts as a retainer and a seal.

The claims defining the invention are as follows:

1. A composite housing for a rotary-valve rack and pinion power steering gear, comprising:
a pinion housing portion fabricated from a light-weight first metal;

a pinion bore formed in the pinion housing portion, the pinion bore being aligned on a pinion axis of the pinion housing portion;

a right circular cylindrical valve housing portion fabricated from a second metal that is more dense and abrasion-resistant than the first metal;

a counterbore formed in an end surface of the pinion housing portion around an end of the pinion bore, the counterbore providing an inner cylindrical surface aligned on the pinion axis;

an injection moulding passage formed in the pinion housing portion;

a first annular groove formed in the inner cylindrical surface of the counterbore and connected to the injection moulding passage;

an annular neck formed on the valve housing portion and having an outer cylindrical surface;

a second annular groove formed in the outer cylindrical surface of the valve housing portion, the annular neck on the valve housing portion being received in the counterbore in the pinion housing portion with an interference press fit between the inner cylindrical surface and the outer cylindrical surface, and with the first annular groove overlapping at least a portion of the second annular groove and co-operating therewith in defining an annular ring chamber; and

in-situ injection-moulded retaining and seal means in the passage means and in the ring

chamber forming a retaining ring redundantly inhibiting withdrawal of the valve housing portion from the pinion housing portion and sealing the interface between the inner and the outer cylindrical surfaces.

2. A composite housing according to claim 1, in which the annular neck on the valve housing portion includes an inner cylindrical surface that is aligned on the pinion axis when the annular neck is received in the counterbore, and forms a bearing support for a pinion shaft of the rack and pinion steering gear in the pinion housing portion.

3. A method of forming a composite housing for a rotary-valve rack and pinion power steering gear, comprising the steps of:

forming a pinion housing portion from a light-weight first metal;

forming a pinion bore in the pinion housing aligned on a pinion axis of the pinion housing portion;

forming a right circular cylindrical valve housing portion from a second metal that is more dense and abrasion-resistant than the first metal;

forming a counterbore in an end surface of the pinion housing portion around an end of the pinion bore defining an inner cylindrical surface aligned on the pinion axis;

forming an injection moulding passage in the pinion housing portion;

forming a first annular groove in the inner cylindrical surface of the counterbore connected to the injection moulding passage;

forming an annular neck on the valve housing portion having an outer cylindrical surface;

forming a second annular groove in the outer cylindrical surface of the annular neck;

connecting the valve housing portion to the pinion housing portion by press-fitting the annular neck into the counterbore with an interference fit between the inner cylindrical surface and the outer cylindrical surface, and with the first annular groove overlapping at least a portion of the second annular groove and co-operating therewith in defining an annular ring chamber; and

in-situ injection-moulding a retaining and seal ring in the ring chamber, thereby redundantly inhibiting withdrawal of the valve housing portion from the pinion housing portion and sealing the interface between the inner and the outer cylindrical surfaces.

4. A composite housing for a rotary-valve rack and pinion power steering gear according to claim 1, substantially as herein described with reference to the accompanying drawing .

5. A method of forming a composite housing for a rotary-valve rack and pinion power steering gear according to claim 3, substantially as herein described with reference to the accompanying drawing.

DATED: 22 JANUARY, 1991

PHILLIPS ORMONDE & FITZPATRICK
Attorneys For:
GENERAL MOTORS CORPORATION David B Fitzpatrick

0048

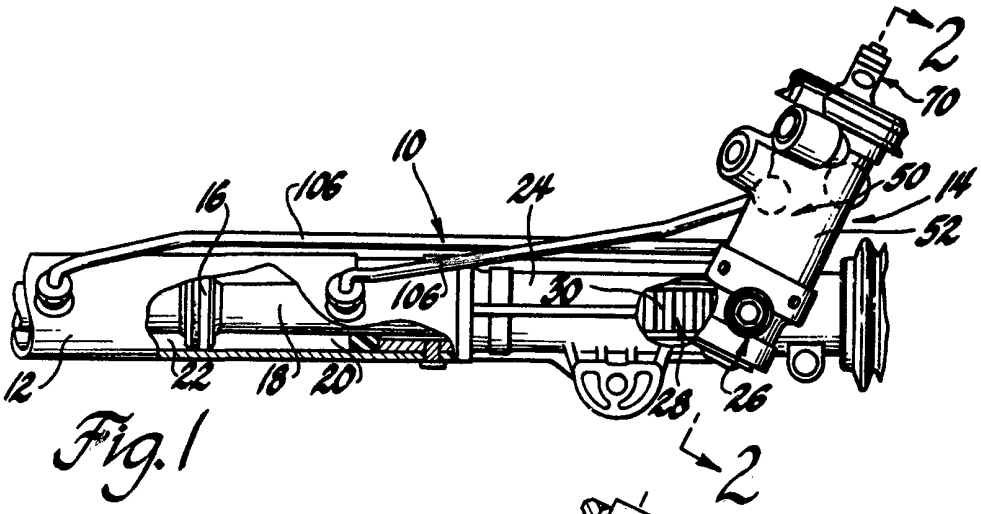
2
70
10
16
106
24
50
14
52
106
30
12
22
18
20
28
26
2

Fig. 1

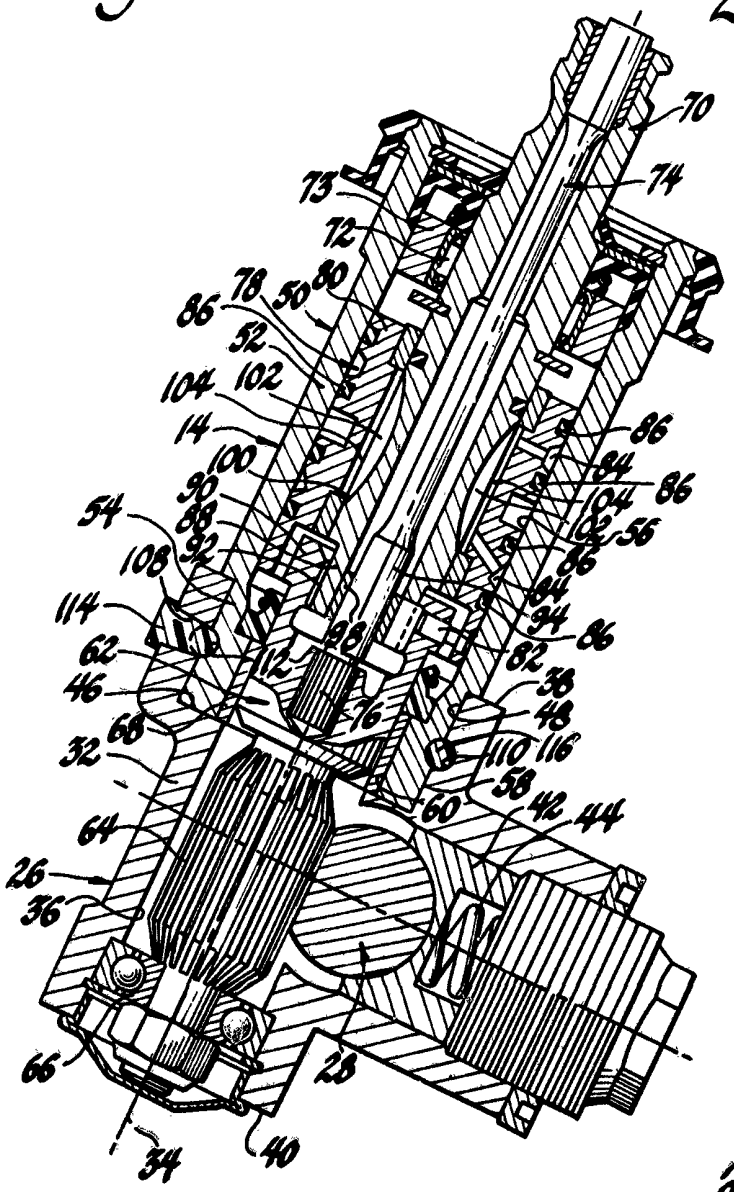
70
74
73
72
80
78
50
86
52
104
102
14
100
90
88
54
92
108
114
62
46
68
32
64
26
36
66
34
40
28
86
84
104
86
102
56
86
84
94
86
82
38
48
110
116
58
60
42
44
98
112
76

Fig. 2