Oct. 21, 1924. 1,512,071

F. G. WHITTINGTON

SIGNAL HEAD FOR TEMPERATURE INDICATORS

Filed March 9, 1922

Fig. 1.

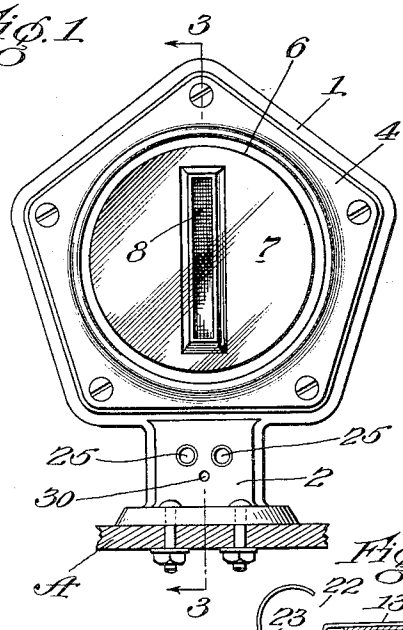

Fig. 2.

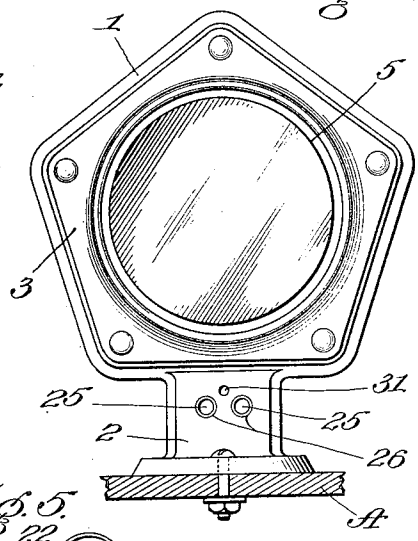

Fig. 5.

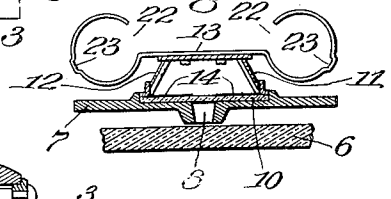

Fig. 3.

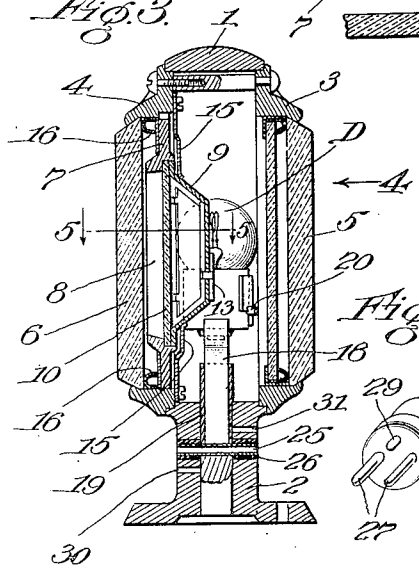

Fig. 6.

Fig. 4.

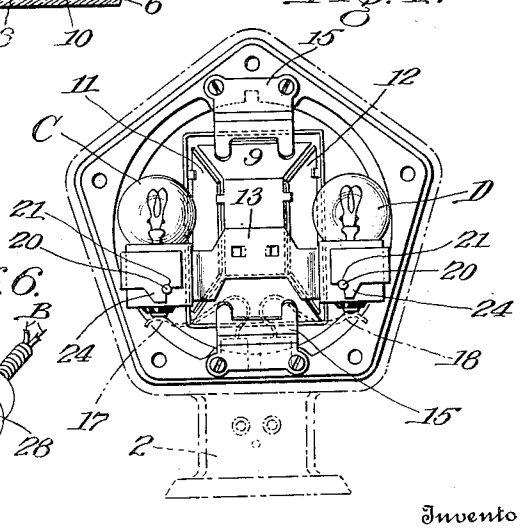

Inventor:

Frederick G. Whittington.

By Burton & Burton

his Attorneys:

Witness:

F. J. Gathmann

Patented Oct. 21, 1924. 1,512,071

UNITED STATES PATENT OFFICE.

FREDERIK G. WHITTINGTON, OF EVANSTON, ILLINOIS, ASSIGNOR TO STEWART-WARNER SPEEDOMETER CORPORATION, OF CHICAGO, ILLINOIS, A CORPORATION OF VIRGINIA.

SIGNAL HEAD FOR TEMPERATURE INDICATORS.

Application filed March 9, 1922. Serial No. 542,425.

To all whom it may concern:

Be it known that I, FREDERIK G. WHITTINGTON, a citizen of the United States, and a resident of Evanston, in the county of Cook and the State of Illinois, have invented certain new and useful Improvements in Signal Heads for Temperature Indicators, of which the following is a specification, reference being had to the accompanying drawings, forming a part thereof.

The purpose of this invention is to provide an improved form of signal head to operate in conjunction with a thermally responsive device for indicating temperature conditions in an internal combustion engine, particularly when employed in a motor vehicle. It consists in various features and elements of construction hereinafter described and shown in the drawings, as indicated by the claims.

In the drawings:

Figure 1 is a rear face view of the signal head showing the side presented to the automobile driver for advising him of engine conditions.

Figure 2 is a front face view of the same.

Figure 3 is a vertical section taken as indicated at line 3—3 on Figure 1.

Figure 4 is an elevation of the signal lamps assembled on their mounting as viewed from the interior of the casing looking in the direction of the arrow, 4, on Figure 3,—the general outline of the casing being indicated in broken lines.

Figure 5 is a transverse detail section taken as indicated at line 5—5 on Figure 3.

Figure 6 is a detail perspective view of an attachment block.

The signal device embodying this invention comprises a signal head mounted in view of the driver or operator of the vehicle or engine, and arranged to display signal lights of different colors, corresponding to different engine temperatures, these lights being connected in electric circuits which are controlled by a temperature responsive device (not shown) in the nature of a thermostat preferably mounted directly against the metal body of the engine for experiencing substantially the engine temperature as more fully shown and described in my copending application, Serial No. 420,330, filed October 29, 1920. The present invention is directed to a type of construction which permits the electric light bulbs which are used as signal lamps to be of clear glass and interchangeable, although the signal light displayed to the engine operator is rendered colored by the use of colored transmitting media or screens of glass or other suitable translucent material. The signal head itself may be mounted on the radiator cap of an automobile or upon the cowl or hood of the body, or the fender, or in any other convenient location from which it may be readily observed by the driver seated at the steering wheel.

In the drawings, a fragment of a wall or part is indicated at A, and this may be understood to be a portion of such radiator cap, fender or body wall as may be convenient for supporting the signal head. The head is connected by a pair of circuit wires, B, preferably formed into a cable and leading from the thermally responsive element in the engine (not shown). These two wires, B, serve to energize one or the other of a pair of signal lamps, C and D.

The signal head containing the two lamps, C and D, is preferably made as a casing composed of a peripheral frame portion, 1, supported upon a stem or base, 2, and provided with front and rear frame castings, 3 and 4, each carrying a cover glass as indicated at 5 and 6. Within the chamber thus formed, an opaque wall, 7, is secured adjacent the rearwardly facing cover glass, 6, and is formed with a vertically extending slot or window, 8, through which the colored signal light is to be displayed. Secured to the inner side of the wall, 7, is a box or chamber, 9, opening toward the window, 8, and separated therefrom by a translucent light-diffusing screen, 10, preferably of "ground" or etched glass. The oblique side walls of the box, 9, are both formed with windows to which are fitted color screens, 11 and 12, which may be of green and red glass respectively, and a bracket, 13, is attached to the rear wall for supporting the lamps, C and D, adjacent these color screens respectively, just outside the box, 9. The light of either lamp is thus transmitted through its corresponding color screen to the interior of the box, 9, and thence passes through the diffusing screen or glass, 10, to produce a glow of the desired color at the window, 8.

Preferably, to intensify this glow the interior walls of the box, 9, are finished with a white coating, tending to reflect rather than absorb the light rays, and the portions of the glass, 10, at either side of its central part which registers at the window, 8, are silvered to form mirrors, 14, which tend to throw back the colored light against the back wall of the box from which it is then reflected through the window, 8. The box or chamber, 9, is secured to the casing part, 4, by spring clips, 15, which thus serve also to hold the wall, 7, in position against the cover glass, 6, preferably with a suitable metallic bezel ring, 16, interposed.

The bracket, 13, consists simply of a flat strip bent into circular curves at its ends to form sockets to embrace the bases of the lamps, C and D. Spring contact arms, 17 and 18, are rooted in suitable insulating material, 19, in the stem or base, 2, and their yielding end portions extend to engage the central contacts of the lamp bases, and also to force said bases upwardly so that their locking pins, 20, shall engage the notches, 21, formed in the under edges of the curved arms of the bracket, 13, as shown in Figure 8. To permit insertion or withdrawal of the lamps, these sockets are formed with gaps at 22, diametrically opposite grooves, 23, which accommodate the pins, 20, as the lamp bases are moved in or out. Downwardly projecting lugs, 24, on the lower edges of the sockets, serve to arrest rotation of the lamps as the pins reach the notches, 21.

The front and rear faces of the stem, 2, are preferably flat, and the contact arms, 18, are connected with tubular conductors, 25, set in insulating bushings, 26, in this stem so as to present their open ends at both the said flat faces. This permits the contact points, 27, of the attaching plug, 28, to be inserted from either face of the signal head, according to convenience in locating the wires, B; but to insure that the lamps, C, and D, shall be properly connected to the contacts of the thermally responsive device (not shown) the plug is furnished with a positioning pin, 29, and the front and rear faces of the stem, 2, are formed with recesses, 30 and 31, respectively located above and below the tubular connectors, 26, so that the plug must be turned through half a revolution to correspond with the proper connectors when it is transferred from front to back of the stem or vice versa.

I claim:

1. In a device for the purpose indicated, a main supporting member comprising a through-and-through opening, and front and rear face members mounted on said rim member constituting front and rear closures for said through-and-through opening, the front closure member having a glazed opening approximately coextensive with said through-and-through opening of the supporting member; the rear closure member having a window of limited extent at its central part; the main supporting member having inleads for the wires of a lamp energizing circuit; the cavity which is enclosed by the two closure members comprising a first and a second chamber, and a partition which separates said chambers, said partition being mounted on the second mentioned of said closure members at a marginal portion thereof encompassing said window therein; a plurality of lamps in the first chamber, the partition having a like plurality of openings, said openings being situated laterally with respect to the fore-and-aft zone of said window and adjacent to said lamps, respectively, and translucent screens occupying said openings.

2. A signal head comprising a casing having its cavity comprising two chambers and an opaque partition separating the chambers; the outer wall of the first chamber having a glazed opening; a plurality of removably mounted electric lamps in said first chamber for emitting a light beam through said glazed opening; the outer wall of the second chamber having a single window of limited extent, the partition having a plurality of openings at areas situated laterally with respect to the fore-and-aft zone of said window, and differently colored translucent media occupying said openings respectively; the lamp mounting means in the first chamber being extended for carrying the lamp bulbs in said first chamber adjacent to said colored media respectively, and separate electric contacts in the casing for co-operating with said lamps, respectively.

3. In the construction defined in claim 1, foregoing, the areas of the partition in which the translucent screens are respectively positioned being oblique to the fore-and-aft zone of the window, whereby the light beams emitted laterally with respect to said window are directed there toward and therethrough.

4. In the construction defined in claim 2, foregoing, the portion of the partition in which the colored media respectively are positioned, being oblique to the fore-and-aft zone of the window; whereby the light beams emitted laterally with respect to the window are directed toward the latter.

5. In the construction defined in claim 1, foregoing, the lamp supports being mounted on the partition.

6. In the construction defined in claim 2, foregoing, the lamp supports being mounted on the partition at a portion thereof intermediate the openings having the colored media.

7. A signal head comprising a casing enclosing a plurality of removably mounted

electric lamps having substantially similar colorless bulbs; a light diffusing chamber in the casing formed with a single window in a wall of the casing, said chamber having an opaque wall directly opposite said window and laterally situated portions adjacent to said opaque wall comprising differently colored translucent media; a bracket secured to said opaque wall outside the chamber formed at its opposite ends to support said electric lamps adjacent said colored media, and separate electrical contact arms in the casing to cooperate with the lamps respectively.

In testimony whereof, I have hereunto set my hand at Chicago, Illinois, this 6th day of March, 1922.

FREDERIK G. WHITTINGTON.