US00RE45622E

(19) **United States**
(12) **Reissued Patent**
Kroll

(10) **Patent Number: US RE45,622 E**
(45) **Date of Reissued Patent: Jul. 28, 2015**

(54) **CROSS-SHAPED DISPLAY STAND**

(71) Applicant: **William F. Kroll**, Boca Raton, FL (US)

(72) Inventor: **William F. Kroll**, Boca Raton, FL (US)

(21) Appl. No.: **29/463,816**

(22) Filed: **Mar. 12, 2014**

Related U.S. Patent Documents

Reissue of:

(64) Patent No.: **Des. 658,908**
Issued: **May 8, 2012**
Appl. No.: **29/400,201**
Filed: **Aug. 24, 2011**

(51) **LOC (10) Cl.** **06-04**

(52) **U.S. Cl.**
USPC **D6/674**; D6/300

(58) **Field of Classification Search**
USPC D6/300–314, 674; D99/5, 23, 27; D11/125, 157, 122; D26/4, 94; D20/15; 211/133, 121, 152, 174, 211/176.1, 85.6, 441.1, 442.2, 450, 451, 211/454, 455, 456
See application file for complete search history.

(56) **References Cited**

U.S. PATENT DOCUMENTS

D67,289	S	*	5/1925	Ladewich	D99/23
D103,027	S	*	2/1937	Slattery	D99/27
D137,421	S	*	3/1944	Rasmussen	D99/23
D159,891	S	*	8/1950	Chevalier	D99/27
D160,900	S	*	11/1950	Suhren	D6/450
D168,686	S	*	1/1953	Hunter	D6/450
D256,398	S		8/1980	Mitchell	
D338,081	S	*	8/1993	Klaffer	D26/94
D338,315	S		8/1993	Larson	
D370,282	S	*	5/1996	Grether	D26/4
D408,653	S	*	4/1999	Dotson et al.	D6/450
D412,461	S	*	8/1999	McGrew	D11/122
D431,206	S	*	9/2000	Byers	D11/125
D440,734	S	*	4/2001	Berry	D99/23
D443,970	S	*	6/2001	Stucker	D99/27
D481,223	S	*	10/2003	Locker et al.	D6/470
D518,939	S	*	4/2006	Borgerding	D99/5
D578,275	S	*	10/2008	Shantz et al.	D99/17
D618,135	S	*	6/2010	Horst	D11/157
D619,926	S	*	7/2010	Letney	D11/157
D649,594	S	*	11/2011	Yi et al.	D20/15
D654,828	S		2/2012	Piric	
D685,675	S		7/2013	Dubow	

* cited by examiner

Primary Examiner — Phillip S Hyder
(74) *Attorney, Agent, or Firm* — Mark D. Bowen; Malin Haley DiMaggio & Bowen, P.A.

(57) **CLAIM**

The ornamental design for a cross-shaped display stand, as shown and described.

DESCRIPTION

FIG. **1** is a front perspective view of a cross-shaped display stand in accordance with the present invention;
FIG. **2** is a bottom perspective view thereof;
FIG. **3** is a front *elevation* view thereof*, with the rear view being identical*;
FIG. **4** is a right side *elevation* view thereof, with the left side view being **[**identical**]** *a mirror image*;
FIG. **5** is a top *plan* view thereof; **[**and,**]**
FIG. **6** is a bottom *plan* view thereof**[.]***;*
FIG. 7 is a front perspective view of a second embodiment of the cross-shaped display stand in accordance with the present invention;
FIG. 8 is a bottom perspective view thereof;
FIG. 9 is a front elevation view thereof, with the rear view being identical;
FIG. 10 is a right side elevation view thereof, with the left side view being a mirror image;
FIG. 11 is a top plan view thereof; and,
FIG. 12 is a bottom plan view thereof.
The dot-dash broken lines in FIGS. 7 through 12 represent the boundaries between claimed and non-claimed subject matter.

1 Claim, 8 Drawing Sheets

Matter enclosed in heavy brackets [ ] appears in the original patent but forms no part of this reissue; matter printed in italics indicates the additions made by reissue.

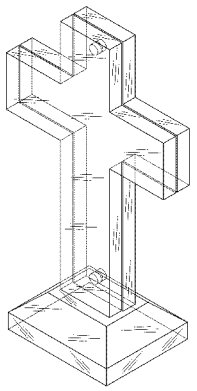

(AMENDED)

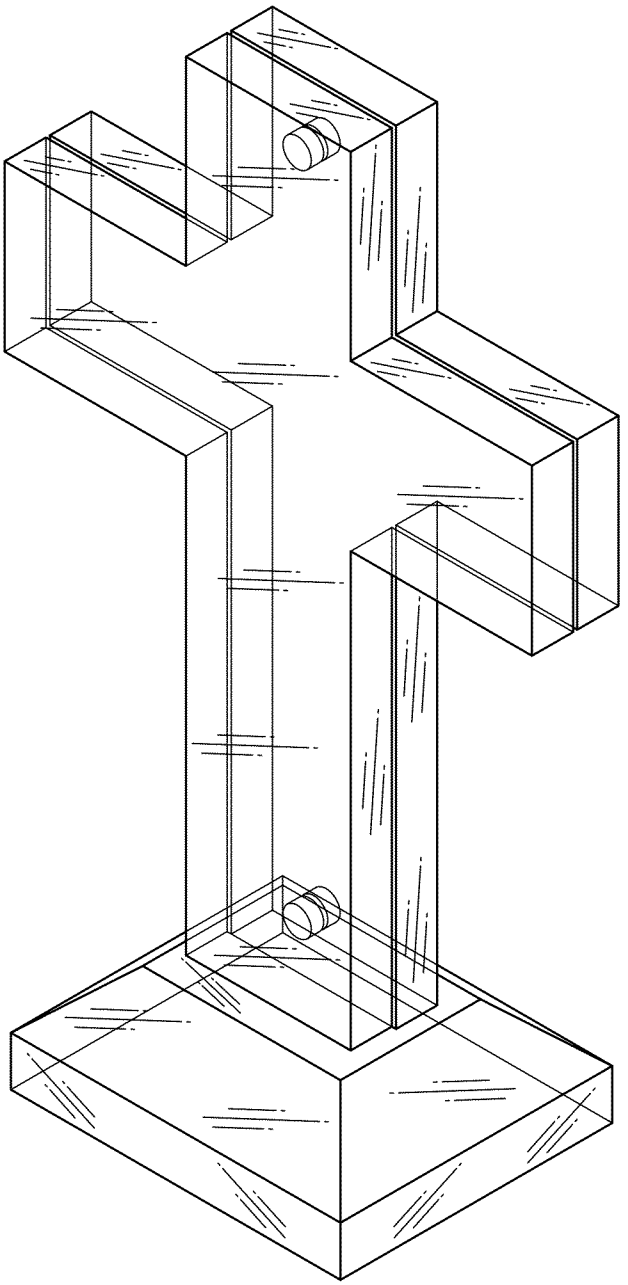

FIG. 1
(AMENDED)

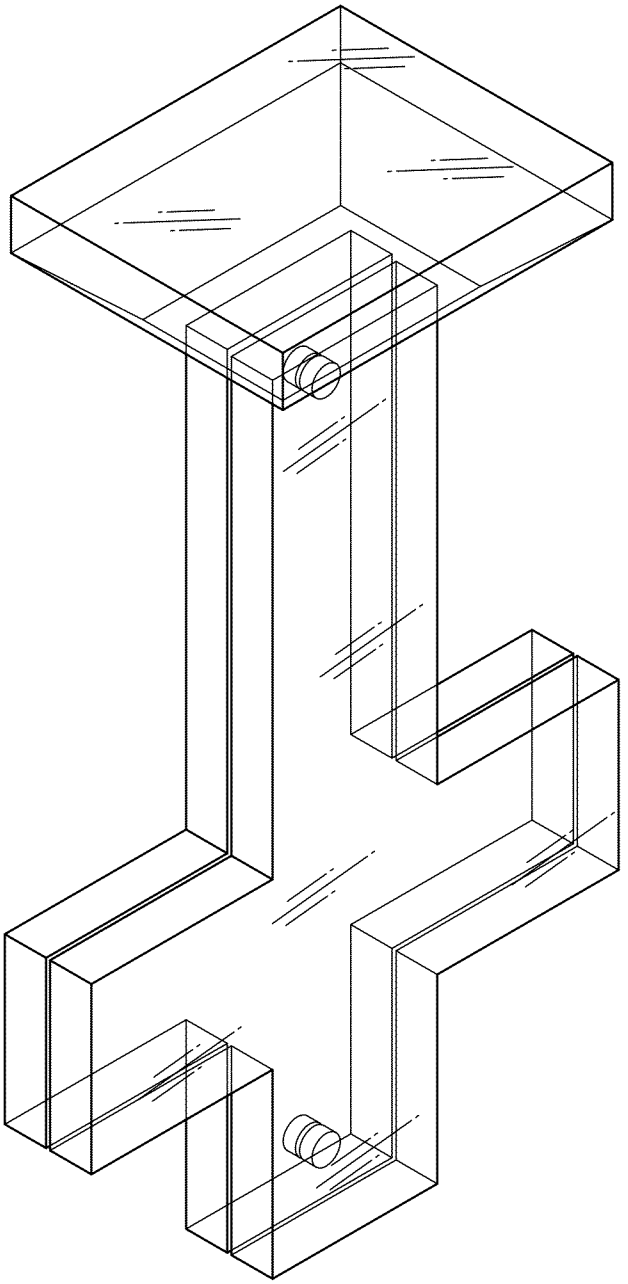

FIG. 2
(AMENDED)

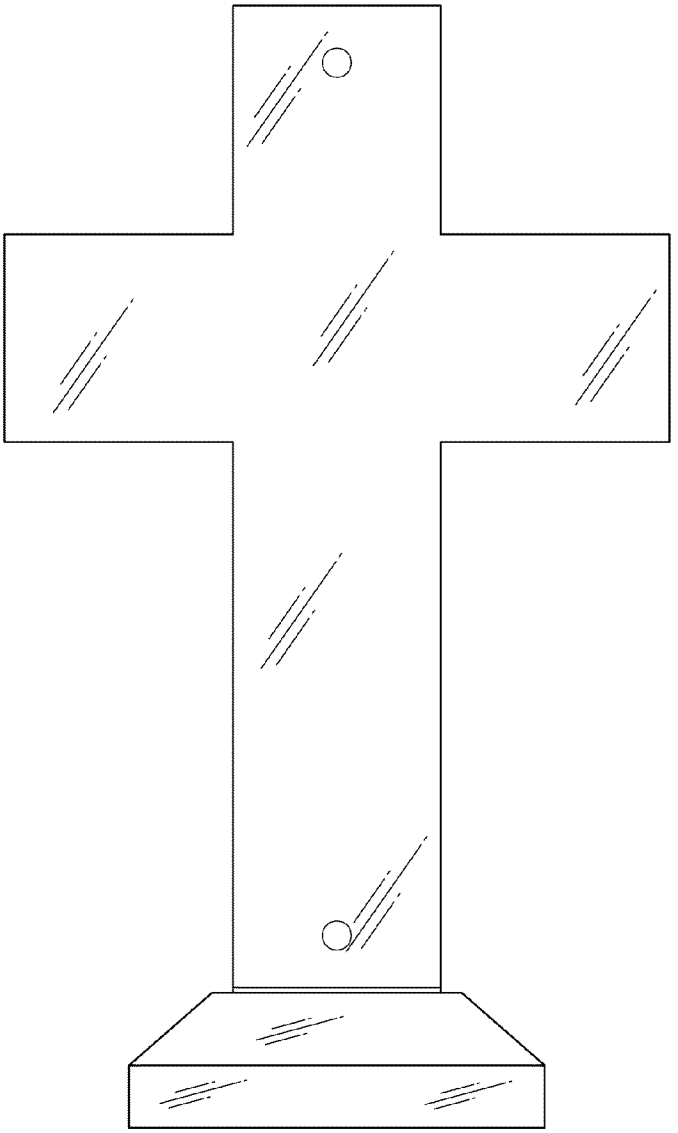

FIG. 3
(AMENDED)

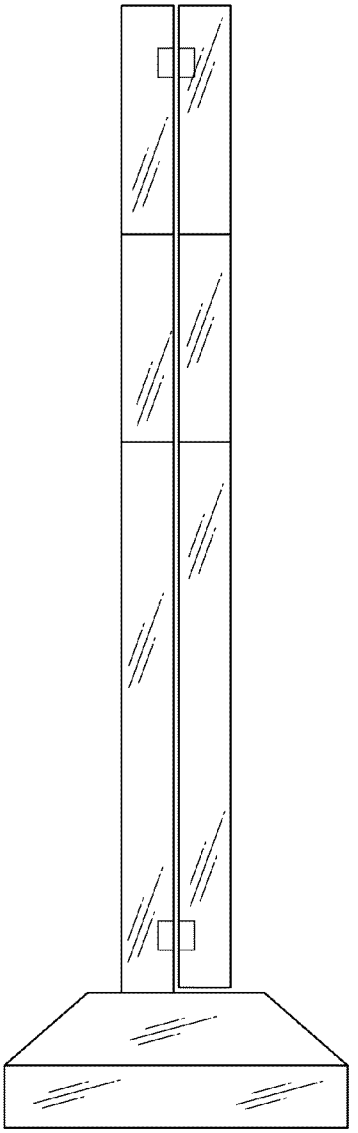

FIG. 4
(AMENDED)

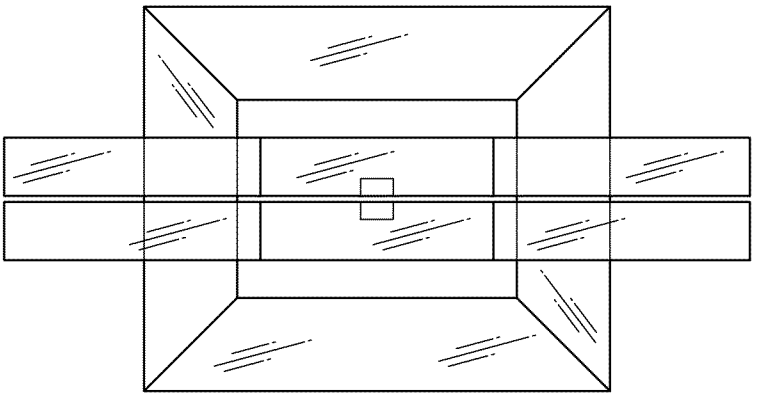

FIG. 5
(AMENDED)

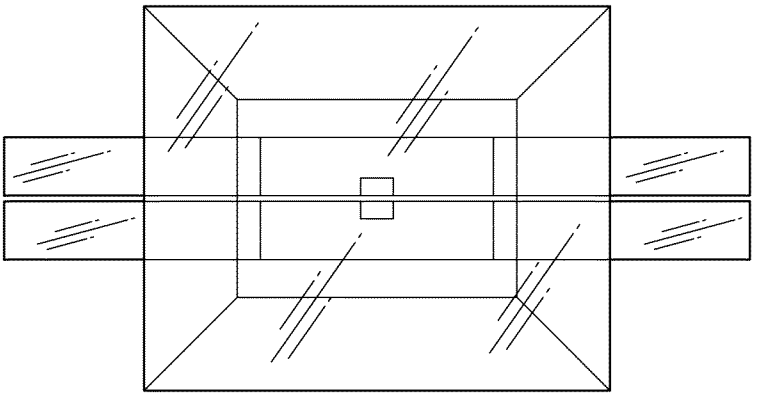

FIG. 6
(AMENDED)

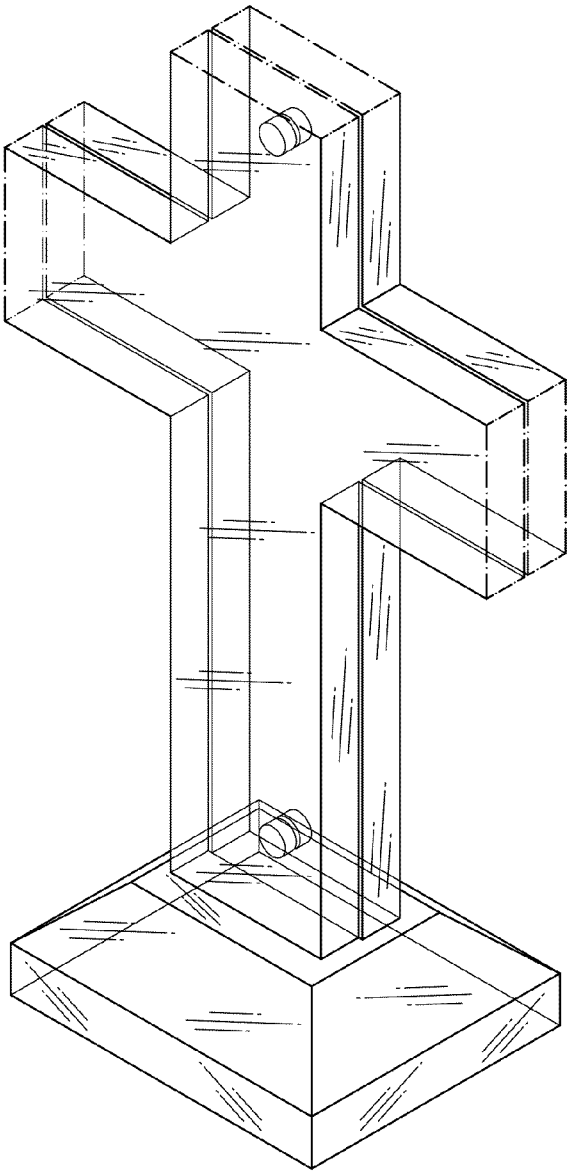

FIG. 7
(NEW)

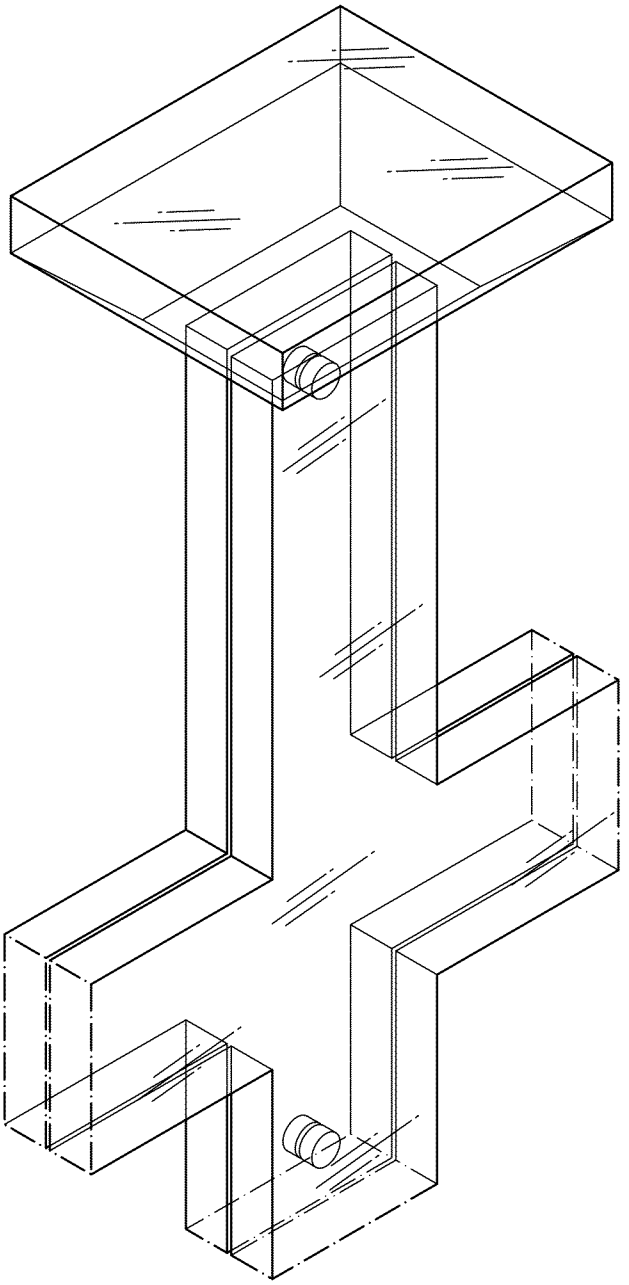

FIG. 8
(NEW)

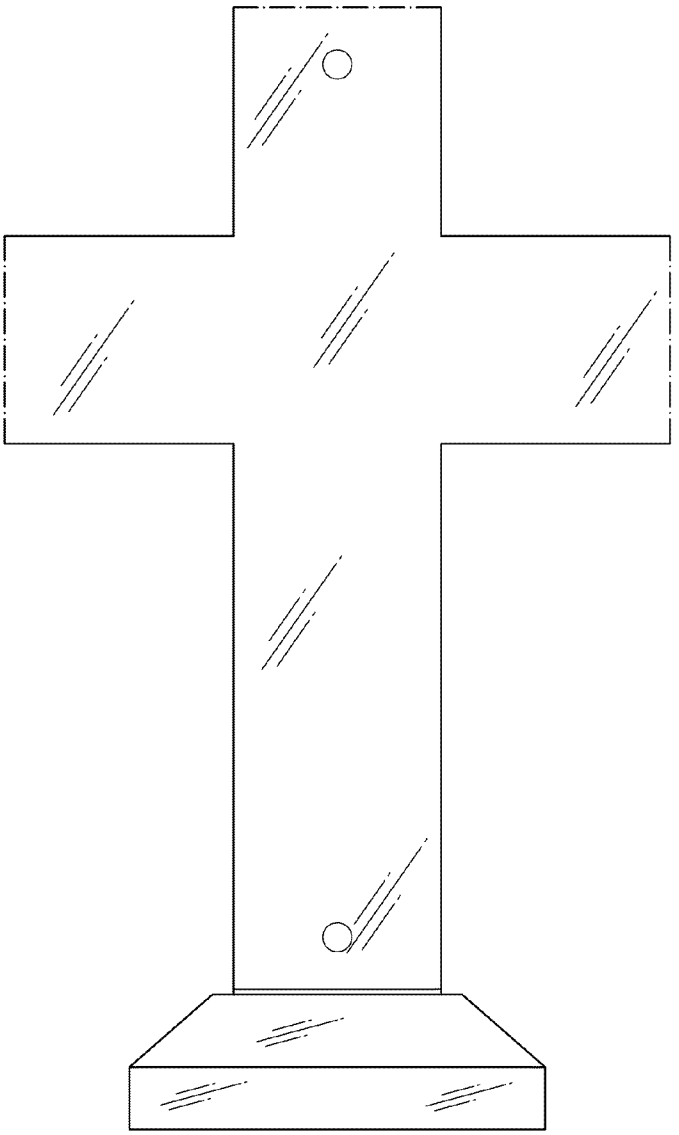

FIG. 9
(NEW)

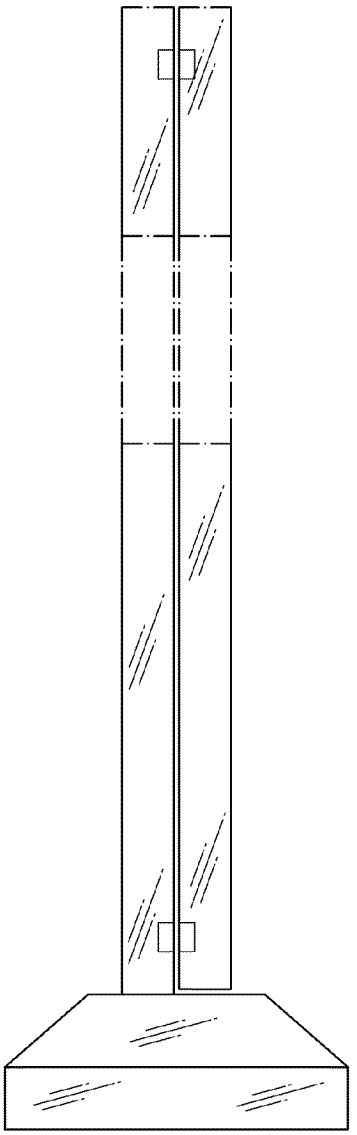

FIG. 10
(NEW)

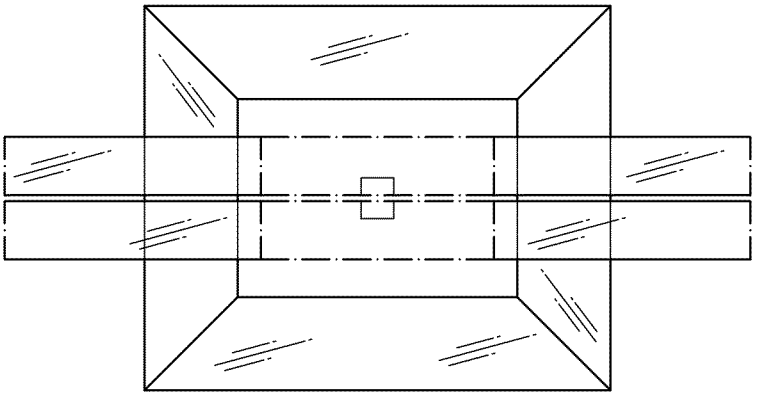

FIG. 11
(NEW)

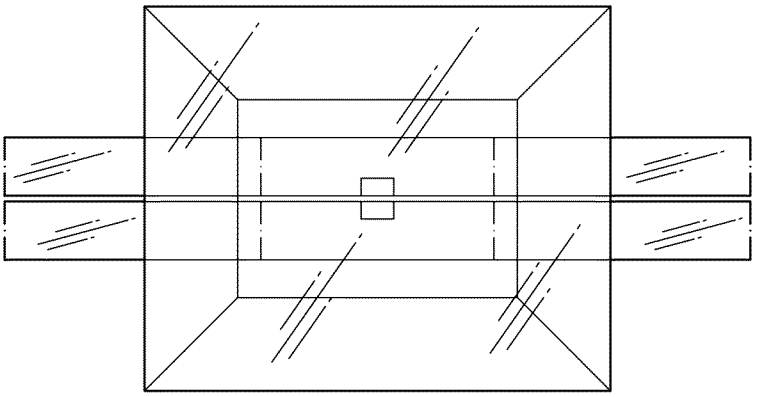

FIG. 12
(NEW)