Office de la Propriété Intellectuelle du Canada
Un organisme d'Industrie Canada

Canadian Intellectual Property Office
An agency of Industry Canada

CA 2611434 C 2012/12/11

(11)(21) **2 611 434**

(12) **BREVET CANADIEN**
CANADIAN PATENT

(13) **C**

(86) Date de dépôt PCT/PCT Filing Date: 2005/05/03
(87) Date publication PCT/PCT Publication Date: 2006/11/09
(45) Date de délivrance/Issue Date: 2012/12/11
(85) Entrée phase nationale/National Entry: 2007/10/15
(86) N° demande PCT/PCT Application No.: US 2005/015259
(87) N° publication PCT/PCT Publication No.: 2006/118570

(51) Cl.Int./Int.Cl. *E21B 43/22* (2006.01)

(72) Inventeurs/Inventors:
PFEIFFER, ROBERT S., US;
ULRICH, GLENN, US;
VANZIN, GARY, US;
DANNAR, VERLIN, US;
DEBRUYN, ROLAND P., US;
DODSON, JAMES B., US

(73) Propriétaire/Owner:
LUCA TECHNOLOGIES, INC., US

(74) Agent: RIDOUT & MAYBEE LLP

(54) Titre : GENERATION DE COMBUSTIBLE GAZEUX BIOGENIQUE DANS DES DEPOTS HYDROCARBONES GEOLOGIQUES

(54) Title: BIOGENIC FUEL GAS GENERATION IN GEOLOGIC HYDROCARBON DEPOSITS

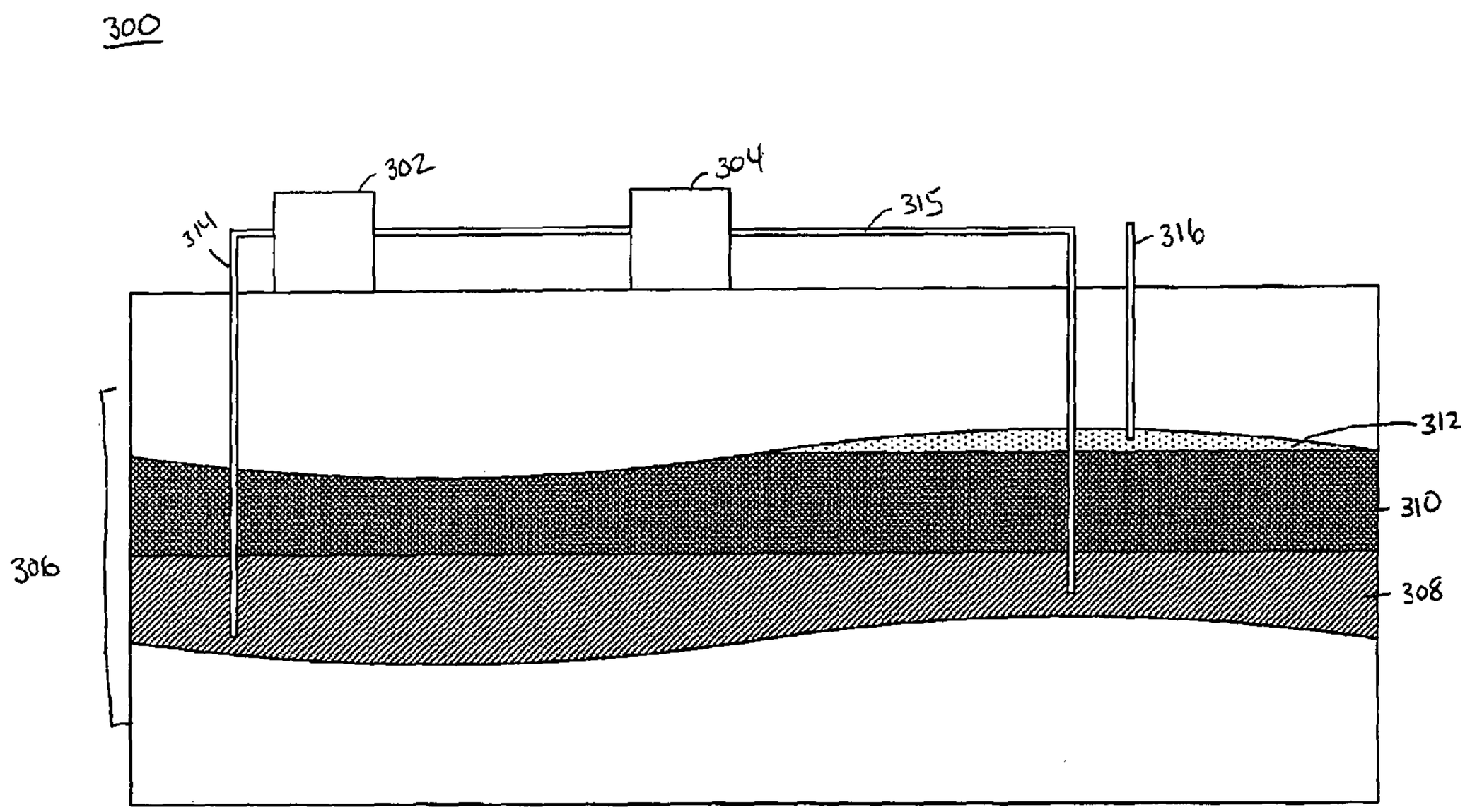

(57) Abrégé/Abstract:
A process for introducing microorganisms to carbonaceous material in an anaerobic environment is described. The process includes the step of extracting formation water from a geologic formation, and removing at least a portion of an extractable material from the formation water to make amended formation water. The process may further include introducing the amended formation water to the carbonaceous material. Also, a process for increasing biogenic hydrocarbon production in a geologic formation containing a carbonaceous material is described. The process includes extracting formation water from the formation, removing at least a portion of one or more hydrocarbons from the formation water to make amended formation water, and reintroducing the amended formation water to the geologic formation.

(12) INTERNATIONAL APPLICATION PUBLISHED UNDER THE PATENT COOPERATION TREATY (PCT)

(19) World Intellectual Property Organization
International Bureau

(43) International Publication Date
9 November 2006 (09.11.2006)

PCT

(10) International Publication Number
WO 2006/118570 A1

(51) International Patent Classification:
E21B 43/22 (2006.01)

(21) International Application Number:
PCT/US2005/015259

(22) International Filing Date: 3 May 2005 (03.05.2005)

(25) Filing Language: English

(26) Publication Language: English

(71) Applicant *(for all designated States except US)*: **LUCA TECHNOLOGIES, LLC.** [US/US]; 1625 Broadway, Suite 2700, Denver, CO 80202 (US).

(71) Applicant and
(72) Inventor: **PFEIFFER, Robert, S.** [US/US]; 5970 N. Belmont Way, Parker, CO 80108 (US).

(72) Inventors; and
(75) Inventors/Applicants *(for US only)*: **ULRICH, Glenn** [US/US]; 5091 Pine Ridge Drive, Golden, CO 80403 (US). **VANZIN, Gary** [US/US]; 12134 W. 85th Ave, Arvada, CO 80005 (US). **DANNAR, Verlin** [US/US]; 271 Bailey Gulch Road, Sheridan, WY 82801 (US). **DEBRUYN, Roland, P.** [CA/US]; 3870 White Bay Drive, Highlands Ranch, CO 80126 (US). **DODSON, James, B.** [US/US]; 257 Lead Queen Drive, Castle Rock, CO 80108 (US).

(74) Agents: **BERNARD, Eugene** et al.; Townsend and Townsend and Crew LLP, Two Embarcadero Center, Eighth Floor, San Francisco, CA 94111-3834 (US).

(81) Designated States *(unless otherwise indicated, for every kind of national protection available)*: AE, AG, AL, AM, AT, AU, AZ, BA, BB, BG, BR, BW, BY, BZ, CA, CH, CN, CO, CR, CU, CZ, DE, DK, DM, DZ, EC, EE, EG, ES, FI, GB, GD, GE, GH, GM, HR, HU, ID, IL, IN, IS, JP, KE, KG, KM, KP, KR, KZ, LC, LK, LR, LS, LT, LU, LV, MA, MD, MG, MK, MN, MW, MX, MZ, NA, NI, NO, NZ, OM, PG, PH, PL, PT, RO, RU, SC, SD, SE, SG, SK, SL, SM, SY, TJ, TM, TN, TR, TT, TZ, UA, UG, US, UZ, VC, VN, YU, ZA, ZM, ZW.

(84) Designated States *(unless otherwise indicated, for every kind of regional protection available)*: ARIPO (BW, GH, GM, KE, LS, MW, MZ, NA, SD, SL, SZ, TZ, UG, ZM, ZW), Eurasian (AM, AZ, BY, KG, KZ, MD, RU, TJ, TM), European (AT, BE, BG, CH, CY, CZ, DE, DK, EE, ES, FI, FR, GB, GR, HU, IE, IS, IT, LT, LU, MC, NL, PL, PT, RO, SE, SI, SK, TR), OAPI (BF, BJ, CF, CG, CI, CM, GA, GN, GQ, GW, ML, MR, NE, SN, TD, TG).

[Continued on next page]

(54) Title: BIOGENIC FUEL GAS GENERATION IN GEOLOGIC HYDROCARBON DEPOSITS

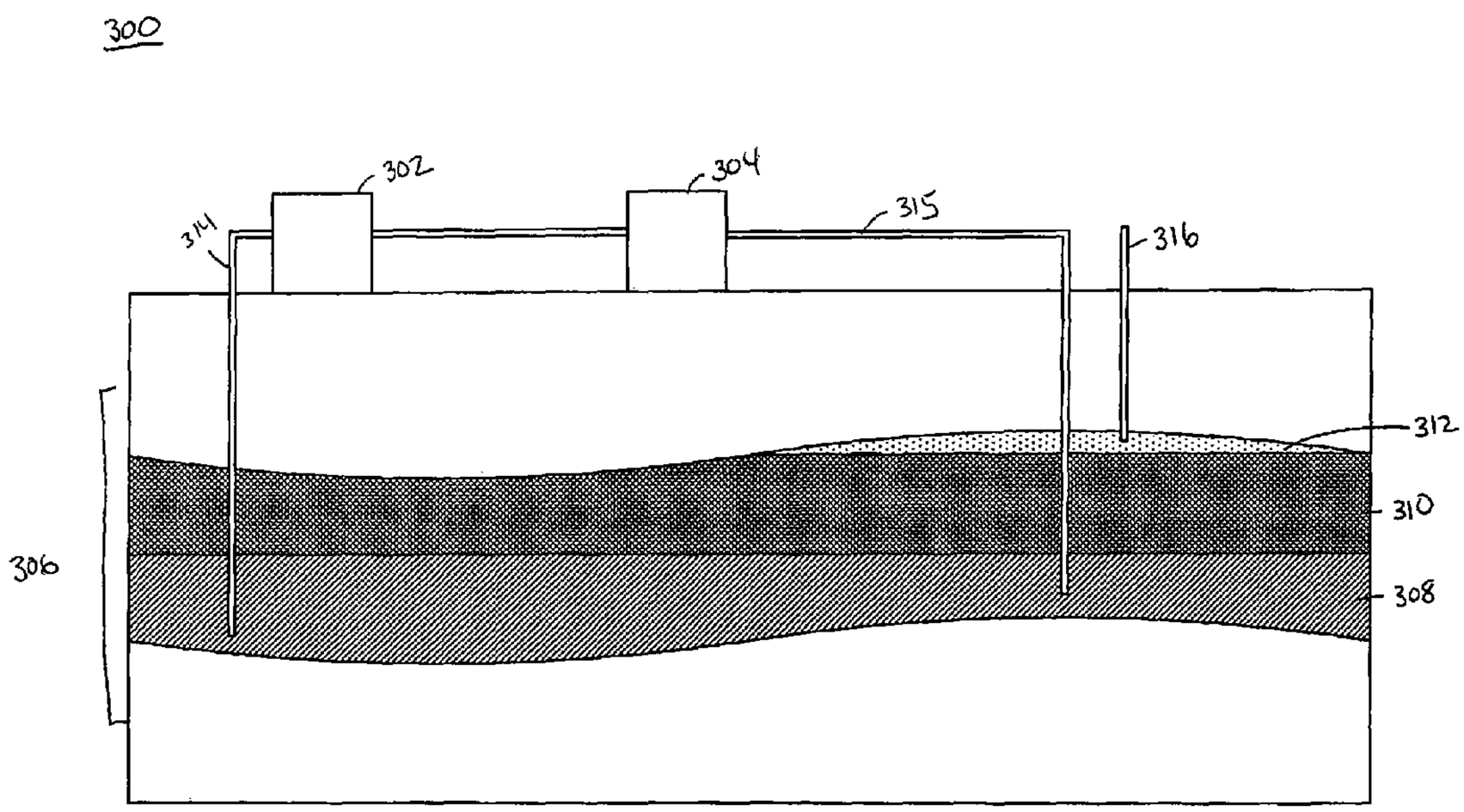

(57) Abstract: A process for introducing microorganisms to carbonaceous material in an anaerobic environment is described. The process includes the step of extracting formation water from a geologic formation, and removing at least a portion of an extractable material from the formation water to make amended formation water. The process may further include introducing the amended formation water to the carbonaceous material. Also, a process for increasing biogenic hydrocarbon production in a geologic formation containing a carbonaceous material is described. The process includes extracting formation water from the formation, removing at least a portion of one or more hydrocarbons from the formation water to make amended formation water, and reintroducing the amended formation water to the geologic formation.

WO 2006/118570 A1

WO 2006/118570 A1

Published:
— *with international search report*

For two-letter codes and other abbreviations, refer to the "Guidance Notes on Codes and Abbreviations" appearing at the beginning of each regular issue of the PCT Gazette.

BIOGENIC FUEL GAS GENERATION IN GEOLOGIC HYDROCARBON DEPOSITS

FIELD OF THE INVENTION

[0001] The present invention relates to the transport of formation water within, or between, hydrocarbon containing geologic formations. Specifically, the invention relates to systems and methods of extracting and transporting formation water such that microorganisms present in the formation water remain viable.

BACKGROUND OF THE INVENTION

[0002] The formation water present in subterranean geologic formations of oil, coal, and other carbonaceous materials is normally considered an obstacle to the recovery of materials from those formations. In coal mining, for example, formation water often has to be pumped out of the formation and into remote ponds to make the coal accessible to mining equipment. Similarly, formation water has to be separated from the crude oil extracted from a subterranean field and dumped into a pool or holding tank. The extraction, separation and storage of the formation water add costs to recovery processes, and generate a by-product regarded as having little value.

[0003] Further investigation, however, has revealed that even extracted formation water can support active communities of microorganisms from the formation. The presence of these microorganism in the formation environment were known from previous recovery applications, such as microbially enhanced oil recovery (MEOR), where the microorganisms naturally generate surface active agents, such as glycolipids, that help release oil trapped in porous substrates. In MEOR applications, however, it was generally believed that the microorganisms were concentrated in a boundary layer between the oil and water phases. The bulk formation water was believed to be relatively unpopulated, because it lacked a hydrocarbon food source for the microorganisms. More recent studies have shown that robust populations of microorganisms do exist in the bulk formation water, and can even survive extraction from the geologic formation under the right conditions.

[0004] The discovery of active populations of microorganisms in bulk formation water has come at a time when new applications are being envisioned for these microorganisms. For years, energy producers have seen evidence that materials like methane are being produced biogenically in formations, presumably by microorganisms metabolizing carbonaceous substrates. Until recently, these observations have been little more than an academic curiosity, as commercial production efforts have focused mainly on the recovery of coal, oil, and other fossil fuels. However, as supplies of easily recoverable natural gas and oil start to dwindle, and interest grows using more environmentally friendly fuels like hydrogen and methane, biogenic production methods for producing these fuels are starting to receive increased attention.

[0005] Unfortunately, the techniques and infrastructure that have been developed over the past century for energy production (*e.g.*, oil and gas drilling, coal mining, *etc.*) may not be easily adaptable to commercial-scale, biogenic fuel production. Conventional methods and systems for extracting formation water from a subterranean formation have focused on getting the water out quickly, and at the lowest cost. Little consideration has been given to extracting the water in ways that preserve the microorganisms living in the water. Similarly, there has been little development of methods and systems to harness microbially active formation water for enhancing biogenic production of hydrogen, methane, and other metabolic products of the microbial digestion of carbonaceous substrates. Thus, there is a need for new methods and systems of extracting, treating, and transporting formation water within, between, and/or back into geologic formations, such that microbial activity in the water can be preserved and even enhanced.

BRIEF SUMMARY OF THE INVENTION

[0006] Embodiments of the invention relate to processes for introducing microorganisms to carbonaceous material in an anaerobic environment. The processes may include extracting formation water from a geologic formation, and removing at least a portion of an extractable material from the formation water to make amended formation water. The processes may further include introducing the amended formation water to the carbonaceous material.

[0007] Embodiments of the invention also relate to processes for increasing biogenic hydrocarbon production in a geologic formation containing a carbonaceous material. The processes may include extracting formation water from the formation, and removing at least a

portion of one or more hydrocarbons from the formation water to make amended formation water. The processes may further include reintroducing the amended formation water to the geologic formation.

[0008] Embodiments of the invention may still further relate to processes for transporting formation water between geologic formations. The processes may include extracting the formation water from a first formation, and removing at least a portion of a hydrocarbon from the formation water to make amended formation water. The processes may also include transporting the amended formation water to a second geologic formation, and introducing the amended formation water to the carbonaceous material in the second geologic formation

[0009] Additional embodiments and features are set forth in part in the description that follows, and in part will become apparent to those skilled in the art upon examination of the specification or may be learned by the practice of the invention. The features and advantages of the invention may be realized and attained by means of the instrumentalities, combinations, and methods described in the specification.

BRIEF DESCRIPTION OF THE DRAWINGS

[0010] Fig. 1 is a flowchart illustrating a method of intraformation transport of formation water according to embodiments of the invention;

[0011] Fig. 2 is a flowchart illustrating a method of interformation transport of formation water according to embodiments of the invention;

[0012] Fig. 3 shows a system for intraformation transport of formation water according to embodiments of the invention;

[0013] Fig. 4 shows a system for interformation transport of formation water according to embodiments of the invention; and

[0014] Fig. 5 is a plot of the percentage of methane in the headspace of a sealed coal container over time for three levels of added formation water.

DETAILED DESCRIPTION OF THE INVENTION

[0015] Systems and methods for the transport of anaerobic formation water from a subterranean geologic formation are described. "Anaerobic" formation water is characterized

as having little or no dissolved oxygen, in general no more than 4mg/L, preferably less than 2mg/L, most preferably less than 0.1mg/L, as measured at 20 degrees C and 760mmHg barometric pressure. During application of the present invention, higher levels of dissolved oxygen, greater than 4mg/L, can be tolerated without appreciably degrading microorganism performance, for limited times or in certain locations such as a surface layer in a storage or settling tank. Dissolved oxygen can be measured by well-known methods, such as by commercially-available oxygen electrodes, or by the well-known Winkler reaction.

[0016] The formation water may be extracted and then reintroduced into the same formation (*i.e.*, intraformation transport), or introduced into a different formation (*i.e.*, interformation transport). The formation water may be analyzed to determine the chemical composition of the water, and to ascertain whether microorganisms are present. When microorganisms are present, they may also be identified by genus and/or species.

[0017] The formation water may be amended based on the analysis of the compounds and microorganisms present in the native water. These amendments may include changing the composition of the formation water to enhance the growth of one or more species of the microorganisms present. For example, the amendments may include adjusting the microorganism nutrient levels, pH, salinity, oxidation potential (Eh), and/or metal ion concentrations, among other compositional changes to the formation water. The amendments may also include filtering and/or processing the formation water to reduce the concentration of one or more chemical and/or biological species.

[0018] Amended or unamended, the extracted formation water is transported back to the same formation, or a different formation. For example, intraformation transport may include cycling the formation water through the formation one or more times, where the water may be extracted from the formation, amended, and returned to the formation in a continuous loop process. Interformation transport may include, for example, extracting formation water from a first formation and transporting it to a second subterranean formation that has carbonaceous materials, but little or no native formation water and/or microorganisms. The aqueous environment introduced to the previously dry second formation creates conditions for microorganism populations to grow and convert the carbonaceous material into hydrogen, smaller hydrocarbons (*e.g.*, butane, propane, methane), and other useful metabolites.

[0019] Referring now to Fig. 1, a flowchart is shown that illustrates a method of intraformation transport of formation water according to embodiments of the invention. The

method starts with the accessing the formation water 102 in a geologic formation. The geologic formation may be a previously explored, carbonaceous material containing, subterranean formation, such as a coal mine, oil field, natural gas deposit, carbonaceous shale, natural gas, etc. In many of these instances, access to the formation water can involve utilizing previously mined or drilled access points to the formation. For unexplored formations, accessing the formation water may involve digging, or drilling through a surface layer to access the underlying water.

[0020] Once the formation water is accessed, it may be extracted from the formation 104. The extraction may involve bringing the formation water to the surface using one or more hydrologic pumping techniques. These techniques may include pumping the formation water to the surface using a pumping device that harnesses electrical, mechanical, hydraulic, pneumatic, and/or fluid-expansion type forces, among other modes of action.

[0021] The extracted formation water may be analyzed 106 to ascertain information about the chemical and biological composition of the water. Chemical analyses may include spectrophotometry, NMR, HPLC, gas chromatography, mass spectrometry, voltammetry, and other instrumentation and chemical tests. The tests may determine the presence and concentrations of elements like carbon, phosphorous, nitrogen, sulfur, magnesium, manganese, iron, calcium, zinc, tungsten, and titanium, among others. The tests may also detect the presence and concentrations of polyatomic ions, such as PO4<2">, NH4<+>, NO2<">, NO3<">, and SO4<">, among others. Biological analyses may include techniques and instrumentation for detecting genera and/or species of one or more microorganisms present in the formation water. These test may include genus and/or species identification of anaerobes, aerobes, microaerophiles, etc. found in the formation water.

[0022] The formation water may also be amended 108 by, for example, altering one or more physical (e.g., temperature), chemical, or biological characteristics of the water. As noted above, the amendments may include adjustments to the chemical composition of the formation water, including the increase or decrease of a microorganism nutrient level, pH, salinity, oxidation potential (Eh), and/or metal ion concentration, among other chemical species. For example, changes in microorganism nutrient levels may include changes in formation water concentration of ammonia nitrite, calcium chloride, magnesium carbonate, sodium nitrate, potassium nitrate, di-sodium hydrogen phosphate,

ferric chloride, manganese chloride, zinc chloride, boric acid, copper acetate, sodium molybdate, sodium carbonate, yeast extract, and/or peptone among other nutrients. It may also include changes in nutrient assisting compounds like nitrilotriacetic acid.

[0023] Changes in the biological characteristics of the formation water may include increasing or decreasing the population of one or more genera and/or species of microorganism in the water. Genera whose population in the formation water may be controlled include, Thermotoga, Pseudomonas, Gelria, Clostridia, Moorella, Thermoacetogenium, Methanobacter, Bacillus, Geobacillus, Methanosarcina, Methanocorpusculum, Methanobrevibacter, Methanothermobacter, Methanolobus, Methanohalophilus, Methanococcoides, Methanosalsus, Methanosphaera, Granulicatella, Acinetobacter, Fervidobacterium, Anaerobaculum, Ralstonia, Sulfurospirullum, Acidovorax, Rikenella, Thermoanaeromonas, Desulfovibrio, Dechloromonas, Acetogenium, Desulfuromonas, Ferribacter, and Thiobacillus, among others.

[0024] Whether amended or not, the extracted formation water may be reintroduced back into the geologic formation 110. The formation water may be reintroduced at or near the location where the water is extracted, or at a position remote from the extraction location. The remote position may or may not be in fluid communication with the extraction location {e.g., a cavity in the formation that is hydraulically sealed from the point where the formation water is extracted).

[0025] The formation water may be maintained in an anaerobic state during the extraction, pumping, transport, storage, etc., by using a closed system throughout and displacing the

oxygen present in the system with an inert gas, such as argon, substantially pure nitrogen, and/or helium, among other inert gases. The system may also be pressurized with the inert gas to reduce the amount of ambient oxygen that enters the system. Embodiments of anaerobic formation water extraction, transport and storage systems may include low pressure pumps (*e.g.*, vein, fin, and/or rotary pumps, which may use needle, ball and/or butterfly valves) that may be submersible in the subterranean formation water deposit. The conduits and storage elements of the system may be made of oxygen impermeable and chemically inert materials that minimize the diffusion of free oxygen and other contaminants into the anaerobic formation water. Examples of these materials may include butyl rubber, viton, glass, copper, steel, and stainless steel, among other materials.

[0026] Fig. 2 shows another flowchart illustrating a method of interformation transport of formation water according to embodiments of the invention. Similar to embodiments of methods of intraformation transport shown in Fig. 1, interformation transport may include accessing the formation water 202 in a first geologic formation, and extracting the water 204 from the first formation. The extracted formation water may be analyzed 206, and amended 208 by altering one or more physical, chemical, and/or biological characteristics of the water.

[0027] The formation water may then be transported to a second geologic formation 210. A variety of mechanisms are contemplated for transporting the formation water between the two geologic formations. These include pumping the water through a pipeline that is in fluid communication between the formations. They also include filling containers (e.g., barrels) with formation water and transporting them by vehicle (*e.g.*, car, truck, rail car) to the second formation site. Alternatively, a vehicle designed for the transport of fluids (*e.g.*, a tanker truck, tanker rail car, *etc.*) may be filled with the formation water at the first formation site and driven (or pulled) to the second formation site.

[0028] When the formation water arrives at the second formation site, it is introduced into the second geologic formation 212. The second geologic formation may be a dry formation, where the formation water is pumped into a cavity, network of channels, *etc.* having little or no detectable levels of native formation water. Alternatively, substantial amounts of native formation water may be present in the second formation, and the water from the first formation is mixed with this native water as it is introduced into the second formation.

[0029] Fig. 3 shows a system 300 for intraformation transport of formation water according to embodiments of the invention. The system 300 may include a pump system 302 and

amendment system 304 that are positioned on the surface above a subterranean geologic formation 306. The geologic formation 306 may include a formation water layer 308 that sits below a liquid hydrocarbon layer 310 (e.g., a crude oil layer), which, in turn, may sit below a gas layer 312 (e.g., a natural gas layer). A conduit 314 may be inserted into the formation and positioned such that a distal end of conduit 314 receives formation water from layer 308 and transports it to pump 302 on the surface. In some examples, the conduit 314 may be part of a previous system used to recover hydrocarbons for the formation.

[0030] The pump system 302 used to bring the formation water to the surface may include one or more pumping devices such as dynamic pumping devices, reciprocating displacement pumping devices, and rotary displacement pumping devices, among others.

[0031] Dynamic pumping devices may include centrifugal pumps, such as axial flow centrifugal pumps, mixed flow and/or radial flow pumps, peripheral pumps, and combinations of these pumps. Axial flow pumps may include single-stage or multi-stage, closed impeller, open impeller (*e.g.*, fixed-pitch or variable-pitch) and combinations of these pumps. Mixed flow and/or radial flow centrifugal pumps may include single suction or double suction, self-priming, non-priming, single-stage, or multi-stage, open-impeller, semiopen-impeller, closed-impeller, and combinations of these types of pumps. Peripheral centrifugal pumps may include single-stage or multi-stage, self-priming or non-priming, and combinations of these types of pumps. Dynamic pumps may also include jet pumps, gas lift pumps, hydraulic ram pumps, and electromagnetic pumps, among other types of dynamic pumps.

[0032] Reciprocating displacement pumping devices may include piston or plunger pumps, including steam pumps (*e.g.*, simplex, duplex, triplex or multiplex steam pumps). These pumps may also include power pumps (*e.g.*, single-acting or double-acting; simplex, duplex, triplex, multiplex, and combinations of these power pumps). Also included are pumps utilizing check valves, whether fixed, mobile, or a combination of these characteristics, and may further include hinged barriers, mobile balls or mobile pistons of appropriate shape, with associated containment devices. Also included in reciprocating displacement pumping devices are diaphragm pumps, including simplex, duplex and multiplex, fluid-operated, mechanically-operated, and combinations of these type of pumps.

[0033] Rotary displacement pumping devices include pumps equipped with a single rotor, including vane, piston, flexible member, screw and peristaltic pumps. These pumps may also

include pumps equipped with multiple rotors, including gear, lobe, circumferential piston, and screw pumps.

[0034] At least part of pump system 302 may be submerged in a pool of formation water in a subterranean formation. In operation, the submerged pump may agitate the formation water, causing dissolved methane and other gases to be released and rise to the top of the formation. Thus, in some embodiments the pump system 302 may include a gas collection system (not shown) at the well head to transport the released gases out of the formation.

[0035] When formation water exits pump system 302 it may be transported to an amendment system 304 where the water may be analyzed and/or amended before being reintroduced back into the formation 306. The analysis components of the system 304 may include chemical and biological measurement instrumentation (not shown) used to provide data on the chemical and biological composition of the formation water. The system 304 may also include components and equipment to change the physical, chemical and biological composition of the formation water. For example, the system 304 may include components to increase or decrease the temperature of the water. The system may also include components and equipment to filter the formation water to remove selected chemical and/or biological species. The amendment system 304 may also include components for increasing or decreasing a microorganism nutrient level, pH, salinity, oxidation potential (Eh), and/or metal ion concentration, among other chemical changes to the water.

[0036] Formation water passing through the pump system 302 and amendment system 304 may then be transported thorough pipeline 315 back into the formation 306. In the embodiment shown, the formation water is reintroduced into the same formation water layer 308, but at a different point from where the water was originally extracted. Alternatively, the formation water may be introduced back into the formation at another layer, such as where an end of the conduit 316 opens to the gas layer 312.

[0037] Referring now to Fig. 4, a system 400 for interformation transport of formation water according to embodiments of the invention is shown. The System 400 include a pump system 402 and amendment system 404 positioned above a first geologic formation 406.

Formation water may be extracted by pump system 402 from a formation water layer 408 through conduit 414, and analyzed and amended in amendment system 404. The amended formation water may then be loaded into vehicle 418 which can travel between the first formation 406 and the second geologic formation 420.

[0038] When vehicle 418 is filled with formation water it can travel to pumping system 422 positioned above the second formation 420. An outlet (not shown) on vehicle 418 may be leaktightly connected to the pump unit 422 and the formation water may be delivered to a subterranean cavity 424 above a hydrocarbon bed 426, in the second formation 420, via conduit 428. In alternative embodiments (not shown) the vehicle 418 may include pumping equipment on-board to pump the formation water into the cavity 424, without the use of an on-site pumping system 422. In more alternative embodiments, the vehicle 418 may be replaced by a transport pipeline (not shown) that transports the formation water directly between the first and second formations 408 and 420.

EXPERIMENTAL

[0039] Experiments were done to measure how changes in the levels of formation water can effect methane production from coal extracted under anaerobic conditions from a subterranean coal seam. Formation water was also recovered from the formation under anaerobic conditions (i.e., the formation water samples were not exposed to ambient air).

[0040] Three coal samples of coal were taken from the Dietz Coal seam (North West quadrant of the Powder River Basin). All three samples were placed in 125 ml serum bottles that were sealed in an anaerobic environment of argon gas. No formation water was added to the first sample bottle, while 0.2 ml of formation water was injected into the second sample bottle, and 2.0 ml of formation water is injected into the third sample bottle. The percentage of methane measured in the headspace above the coal in the bottles was then measured over a 1 year period. Fig. 5 shows the plot of the percentage of methane over time for the three samples.

[0041] Fig. 5 clearly demonstrates that the addition of formation water stimulates the production of methane from the coal samples. Additional radiocarbon labeling studies provided strong evidence that the methane was being biogenically produced. Thus, this

experiment shows that formation water can stimulate the biogenic production of methane from carbonaceous substrates like coal.

[0042] The Experiment shows that the addition of the formation water increased the percentage of methane nearly three-fold in about 150 days. The present invention contemplates systems and methods for amending and transporting formation water to carbonaceous materials in formations on commercial scales. A proportional scaling of the resulting increase in methane production will make these formations, which include dormant oil and coal fields, commercially viable sources of methane, hydrogen, and other metabolites from the microbial digestion of carbonaceous substrates.

[0043] Having described several embodiments, it will be recognized by those of skill in the art that various modifications, alternative constructions, and equivalents may be used without departing from the scope of the invention, as defined by the claims. The scope of the claims should not be limited by the preferred embodiments set forth in the examples, but should be given the broadest interpretation consistent with the description as a whole.

[0044] Where a range of values is provided, it is understood that each intervening value, to the tenth of the unit of the lower limit unless the context clearly dictates otherwise, between the upper and lower limits of that range is also specifically disclosed. Each smaller range between any stated value or intervening value in a stated range and any other stated or intervening value in that stated range is encompassed. The upper and lower limits of these smaller ranges may independently be included or excluded in the range, and each range where either, neither or both limits are included in the smaller ranges is also encompassed within the invention, subject to any specifically excluded limit in the stated range. Where the stated range includes one or both of the limits, ranges excluding either or both of those included limits are also included.

[0045] As used herein and in the appended claims, the singular forms "a", "an", and "the" include plural referents unless the context clearly dictates otherwise. Thus, for example, reference to "a process" includes a plurality of such processes and reference to "the electrode" includes reference to one or more electrodes and equivalents thereof known to those skilled in the art, and so forth.

[0046] Also, the words "comprise," "comprising," "include," "including," and "includes" when used in this specification and in the following claims are intended to specify the

presence of stated features, integers, components, or steps, but they do not preclude the presence or addition of one or more other features, integers, components, steps, acts, or groups.

CLAIMS

What is claimed is:

1. A process for introducing microorganisms to carbonaceous material in an anaerobic environment, the process comprising:

extracting formation water comprising microorganisms from a geologic formation;

removing at least a portion of an extractable material from the formation water to make amended formation water; and

introducing the amended formation water to the carbonaceous material.

2. The process of claim 1, wherein the extractable material comprises a hydrocarbon, carbon dioxide, or a sulfur compound.

3. The process of claim 1, wherein the process further comprises adding a growth enhancer to the amended formation water.

4. The process of claim 1, wherein the process further comprises adding an additional microorganism to the amended formation water.

5. The process of claim 1, wherein the anaerobic environment comprises the geologic formation from which the formation water is extracted.

6. The process of claim 1, wherein the anaerobic environment comprises a subterranean formation remotely located from the geologic formation.

7. The process of claim 1, wherein the carbonaceous material is selected from the group consisting of coal, oil, kerogen, peat, lignite, oil shale, tar sands, bitumen, and tar.

8. The process of claim 2, wherein the hydrocarbon removed from the formation water is selected from the group consisting of methane, propane, ethane, butane and oil.

9. The process of claim 1, wherein the formation water is extracted through a well bore formed in the geologic formation.

10. The process of claim 9, wherein the well bore was used previously to extract oil or natural gas from the geologic formation.

11. The process of claim 1, wherein additional water is introduced to the carbonaceous material following the introduction of the amended formation water.

12. The process of claim 11, wherein the additional water comprises unamended formation water.

13. A process for increasing biogenic hydrocarbon production in a geologic formation containing a carbonaceous material, the process comprising:

extracting formation water comprising microorganisms from the formation;

removing at least a portion of one or more hydrocarbons from the formation water to make amended formation water, and

reintroducing the amended formation water to the geologic formation.

14. The process of claim 13, wherein one or more microorganisms are present in the amended formation water.

15. The process of claim 14, wherein the one or more microorganisms include at least one species that is not indigenous to the geologic formation.

16. The process of claim 13, wherein the formation water is extracted through a first well drilled into the formation, and the amended formation water is reintroduced through a second well drilled into the formation.

17. The process of claim 16, wherein the first and second well are fluidly coupled by a conduit and pump that circulates the formation water from the first to the second well.

18. The process of claim 17, wherein the conduit diverts the formation water to an extraction unit where the hydrocarbons are removed, before transferring the amended formation water to the second well.

19. The process of claim 18, wherein the amended formation water leaving the extraction unit is transferred to an addition unit that adds at least one additive to the amended formation water before the conduit transfers the amended water to the second well.

20. The process of claim 13, wherein additional water is introduced to the geologic formation following the reintroduction of the amended formation water.

21. The process of claim 20, wherein the additional water comprises unamended formation water.

22. A process for transporting formation water between geologic formations, the process comprising:

extracting the formation water comprising microorganisms from a first formation;

removing at least a portion of a hydrocarbon from the formation water to make amended formation water;

transporting the amended formation water to a second geologic formation; and

introducing the amended formation water to the carbonaceous material in the second geologic formation.

23. The process of claim 22, wherein the amended formation water includes at least one microorganism that is not indigenous to the second geologic formation.

24. The process of claim 22, wherein the amended formation water is transported to the second geologic formation with a vehicle.

25. The process of claim 22, wherein the amended formation water is transported to the second geologic formation through a pipeline.

26. The process of claim 22, wherein additional water is introduced in the second geologic formation following the introduction of the amended formation water.

27. The process of claim 26, wherein the additional water comprises unamended formation water.

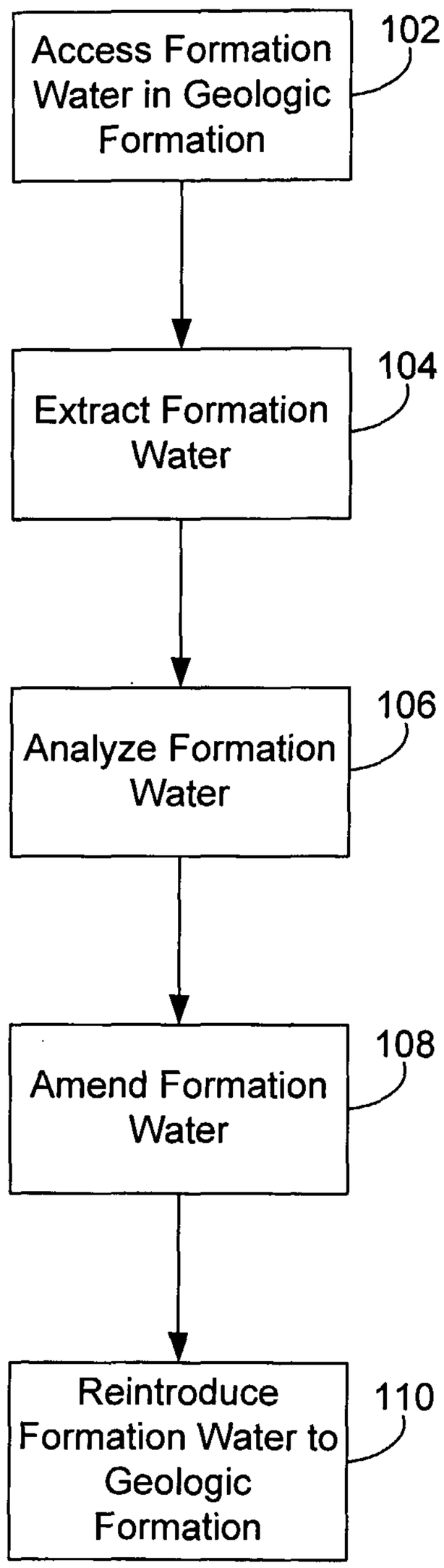
Access Formation Water in Geologic Formation
102
Extract Formation Water
104
Analyze Formation Water
106
Amend Formation Water
108
Reintroduce Formation Water to Geologic Formation
110

Fig. 1

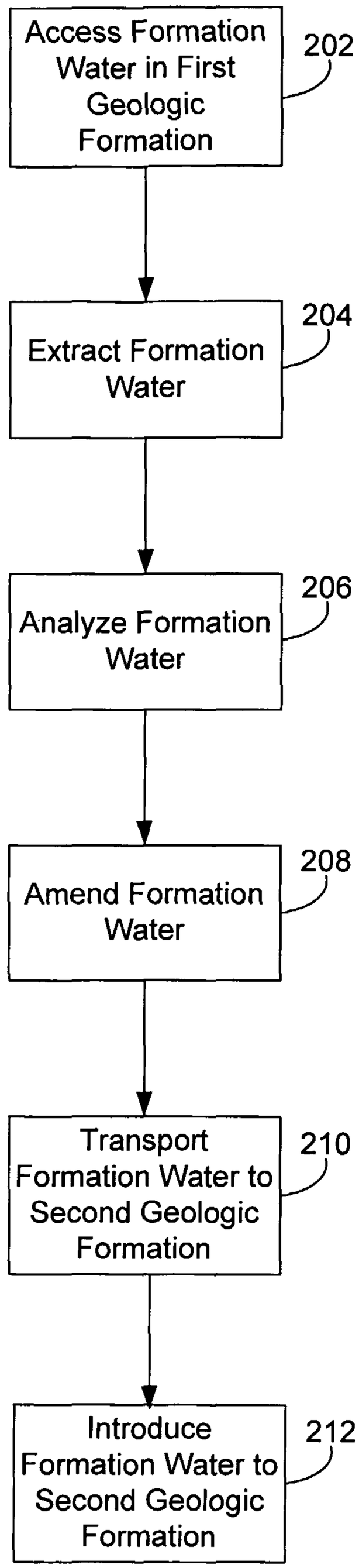
Access Formation Water in First Geologic Formation
202
Extract Formation Water
204
Analyze Formation Water
206
Amend Formation Water
208
Transport Formation Water to Second Geologic Formation
210
Introduce Formation Water to Second Geologic Formation
212

Fig. 2

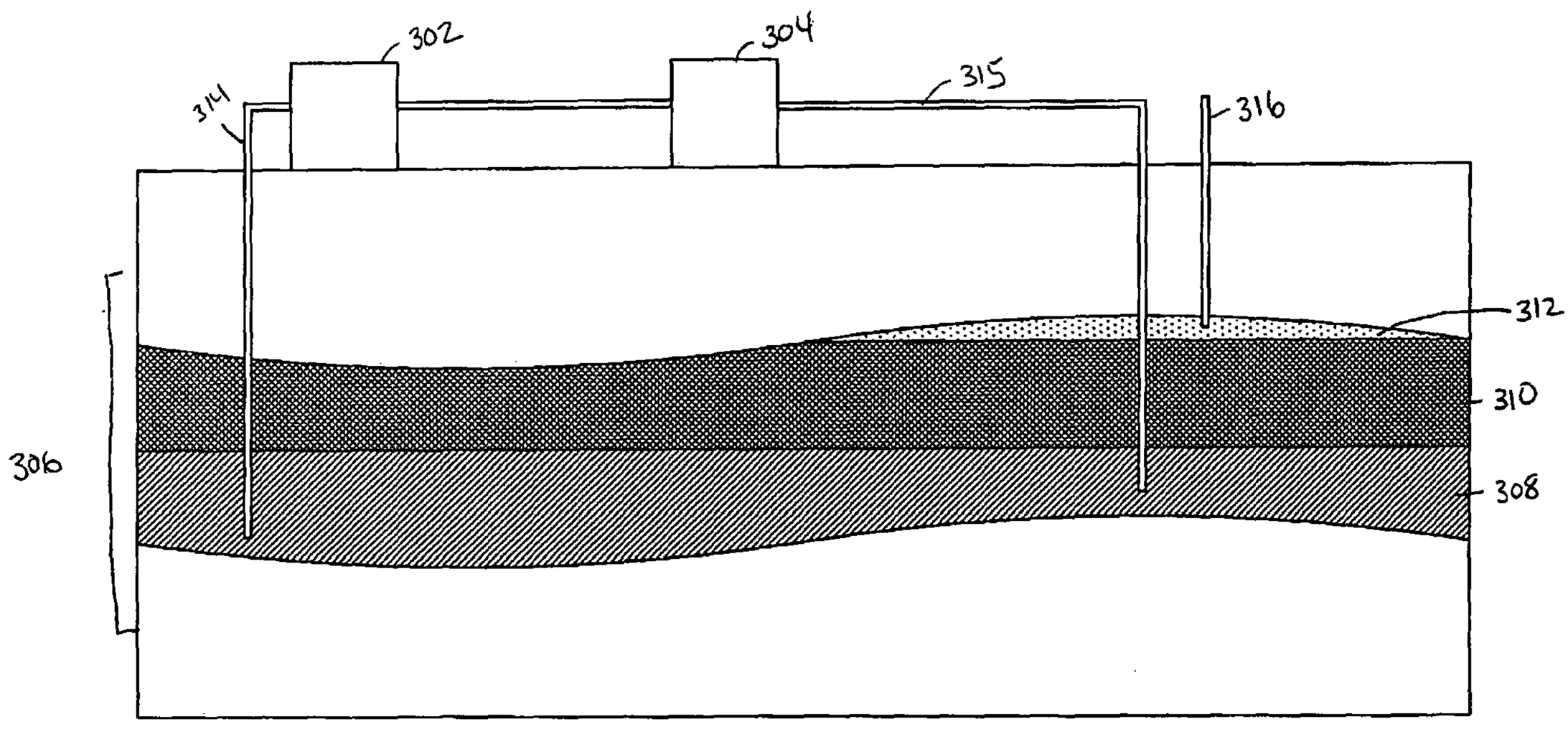

Fig. 3

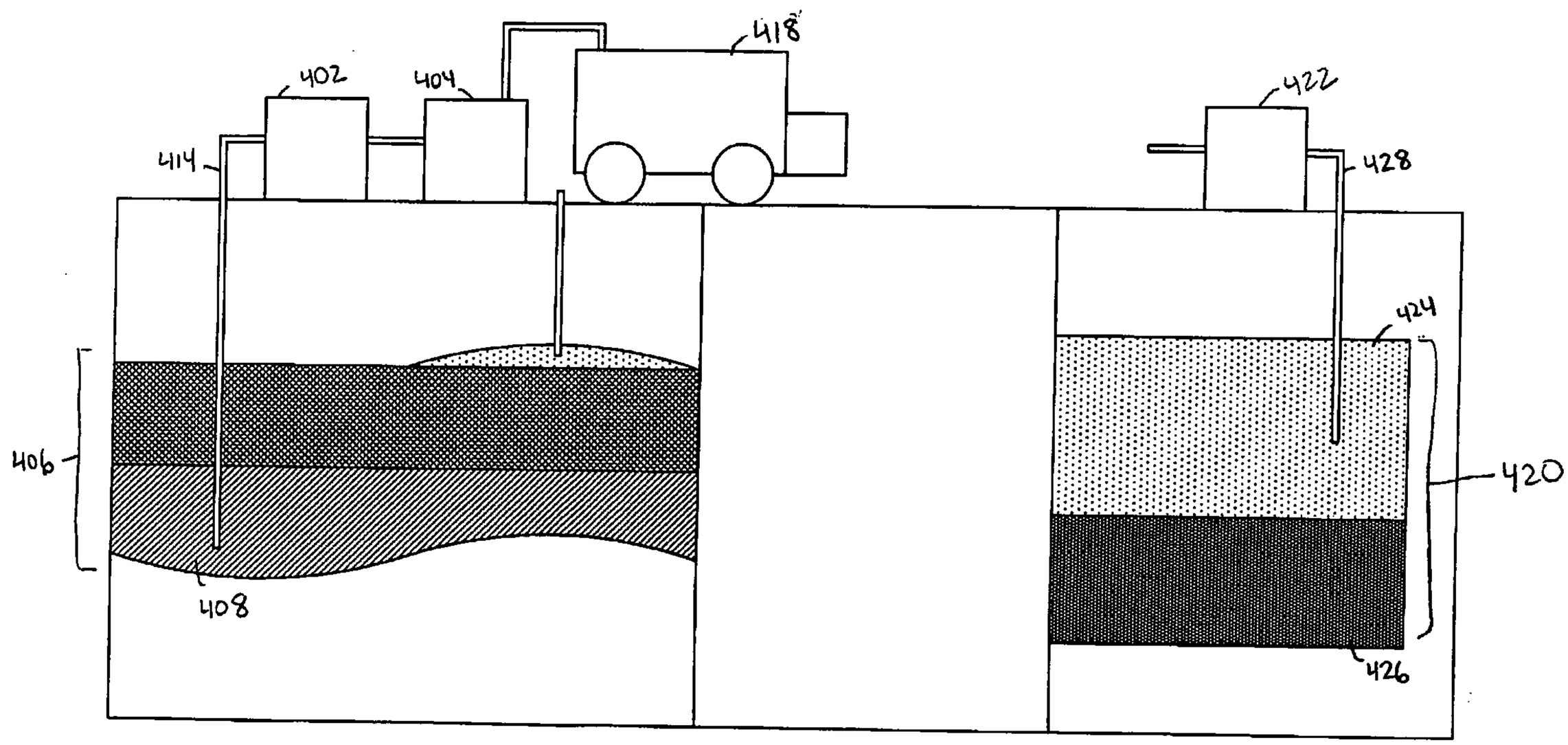

Fig. 4

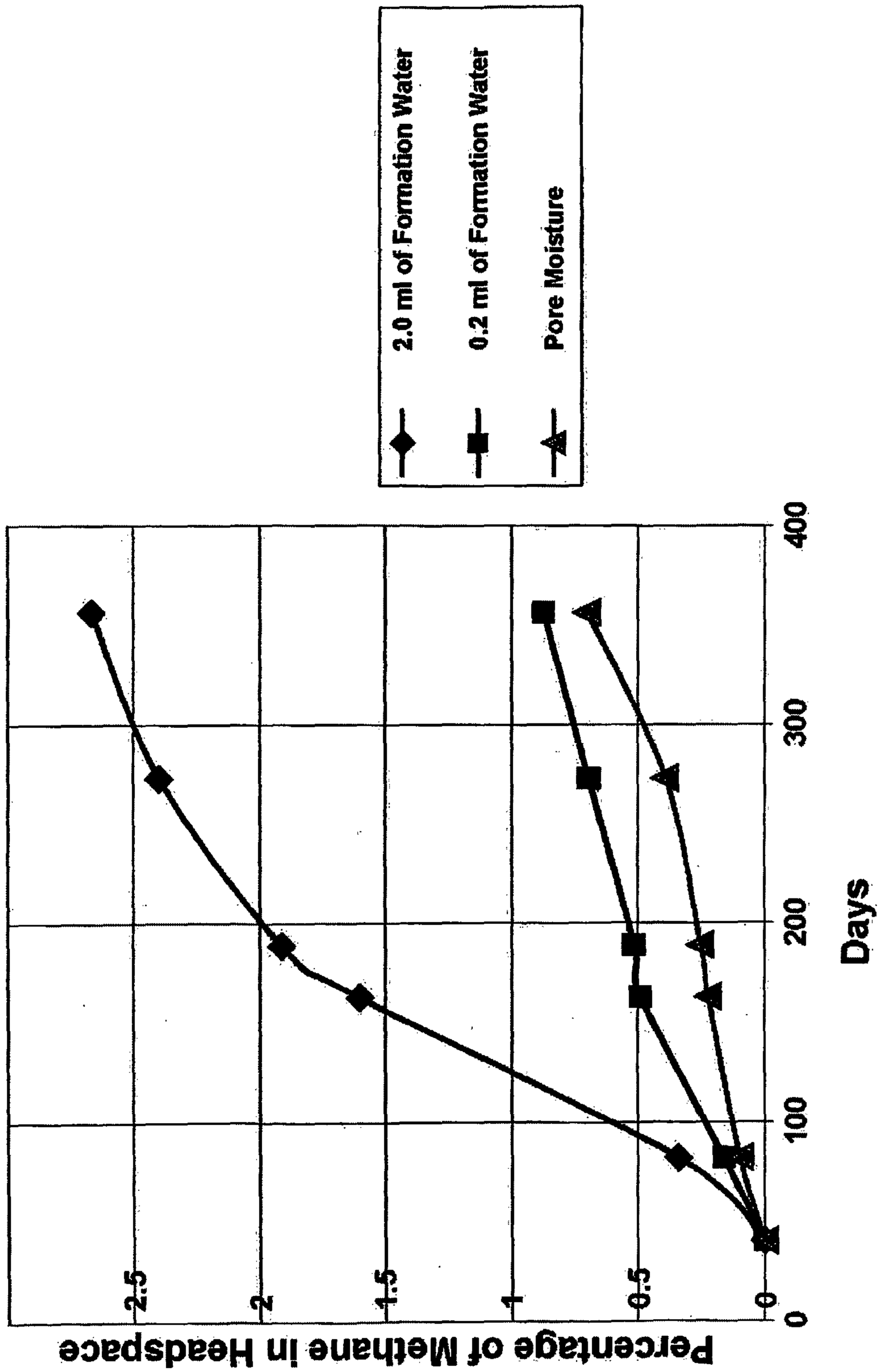
2.0 ml of Formation Water
0.2 ml of Formation Water
Pore Moisture
Percentage of Methane in Headspace
2.5
2
1.5
1
0.5
0
0
100
200
300
400
Days

Fig. 5
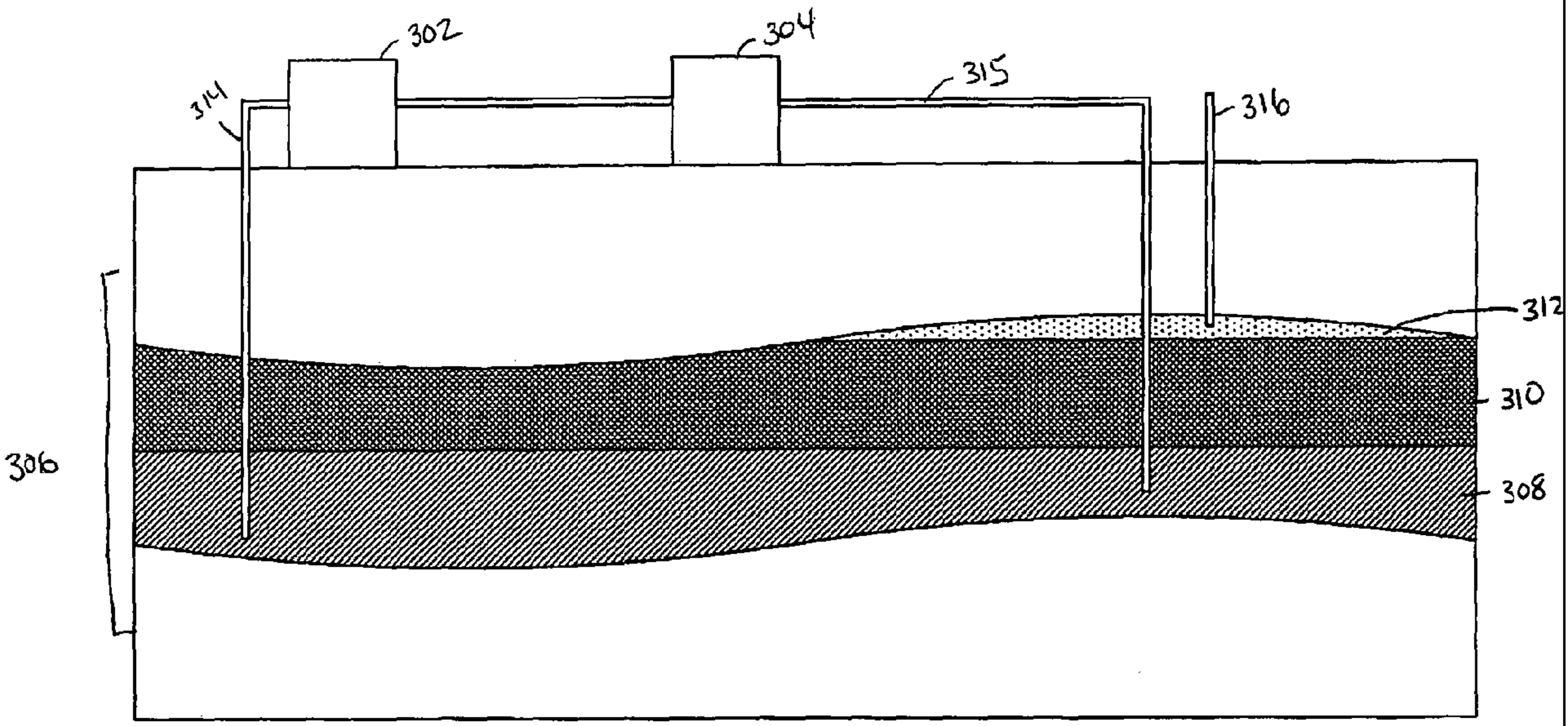
300