Dec. 2, 1941. H. BLANN 2,264,738

MACHINE FOR APPLYING CLOSURES

Filed March 26, 1940 3 Sheets-Sheet 1

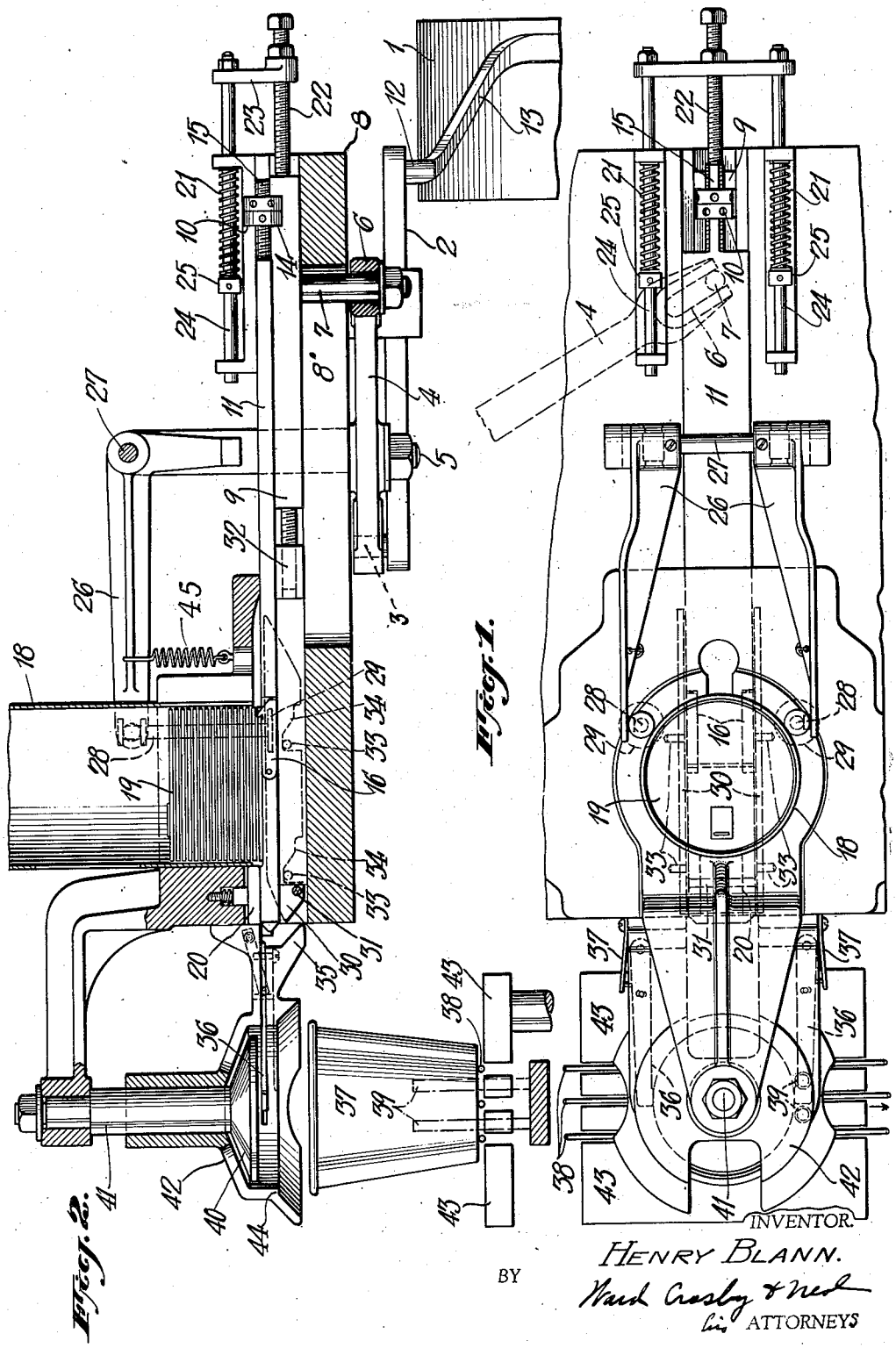

Fig. 1.

Fig. 2.

INVENTOR.
HENRY BLANN.
BY Ward Crosby & Neal
ATTORNEYS

Dec. 2, 1941. H. BLANN 2,264,738

MACHINE FOR APPLYING CLOSURES

Filed March 26, 1940 3 Sheets-Sheet 2

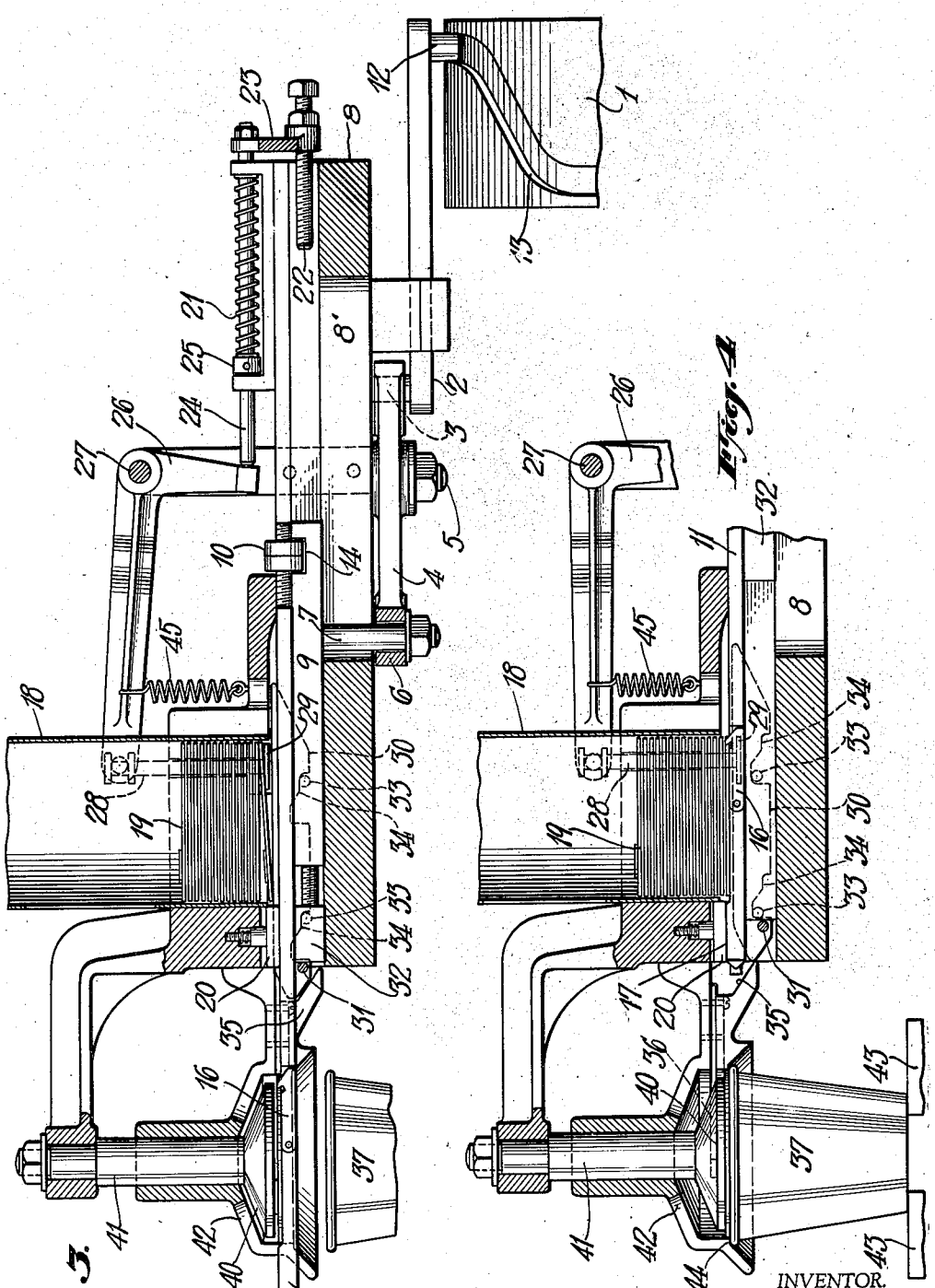

Fig. 3.

Fig. 4

INVENTOR.

HENRY BLANN.

BY

Ward Crosby & Neal

his ATTORNEYS

Dec. 2, 1941. H. BLANN 2,264,738

MACHINE FOR APPLYING CLOSURES

Filed March 26, 1940 3 Sheets-Sheet 3

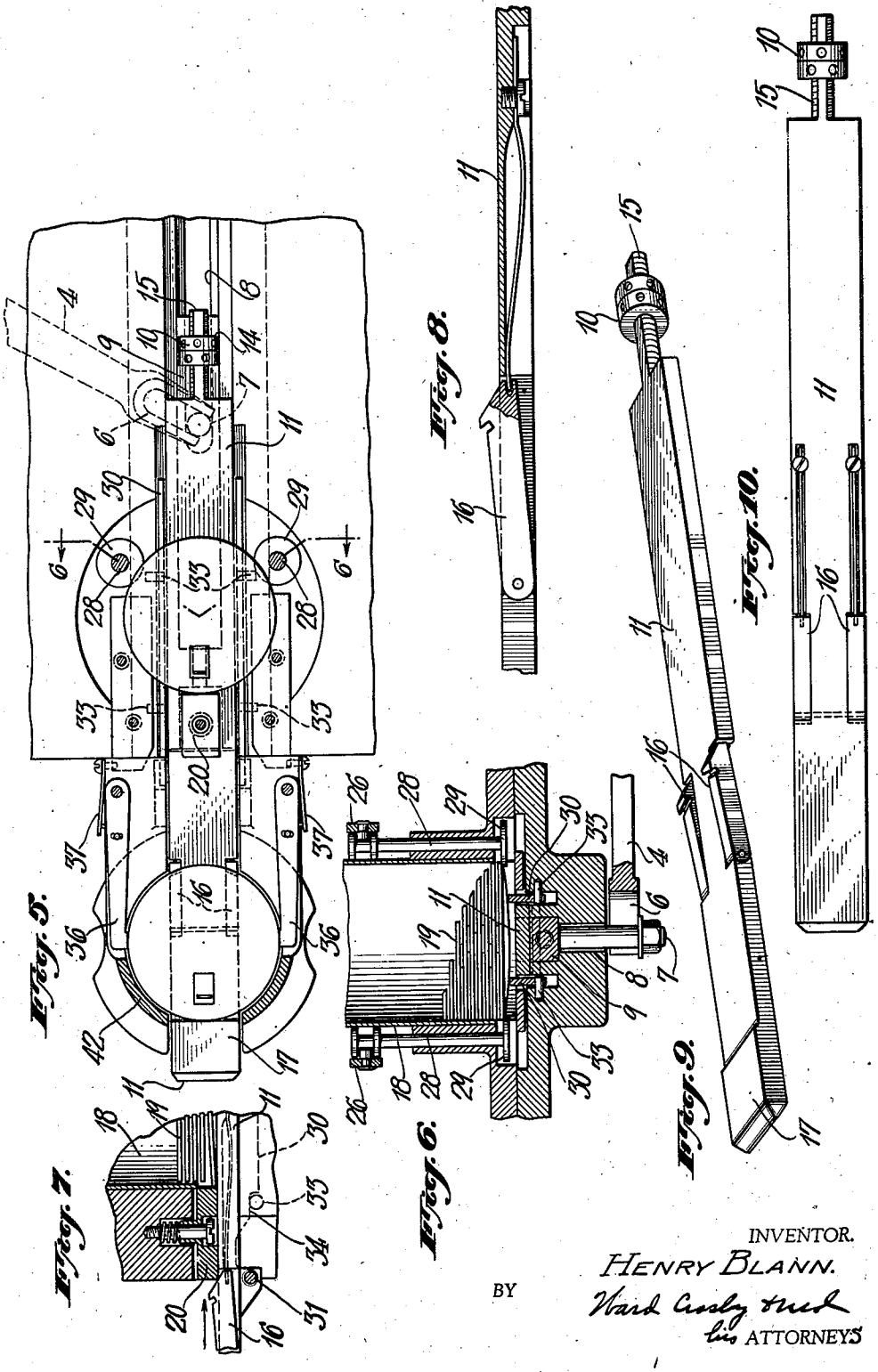

INVENTOR.
HENRY BLANN.

BY Ward Crosby & Neal
his ATTORNEYS

Patented Dec. 2, 1941 2,264,738

UNITED STATES PATENT OFFICE

2,264,738

MACHINE FOR APPLYING CLOSURES

Henry Blann, Flushing, N. Y., assignor to Lily-Tulip Cup Corporation, New York, N. Y., a corporation of Delaware

Application March 26, 1940, Serial No. 326,003

2 Claims. (Cl. 226—92)

This invention relates to a machine for applying disc-like closure or cover elements to the tops of receptacles containing food or the like.

Such a machine preferably is so constructed as to be fully automatic in operation. The filled containers are usually conveyed to the machine in a continuous series, being moved towards it on a conveyor belt or like means. The closure discs are stacked up one upon another and stored ready for use in the magazine of the machine. As the containers pass the machine, the discs are one at a time withdrawn from the magazine, projected outward, and held centered over a container which has stopped momentarily in its travel so as to receive a disc which is then pressed into place on the container to seal the contents therein. As soon as one container has been sealed, it moves away from the machine and another is brought into position under a second disc which meanwhile has been extracted from the magazine and centered so as to be in proper position for sealing the second container. Heretofore great difficulty has been experienced in regulating the disc feeding mechanism with respect to the quantity of containers being conveyed thereto. It often happened that two discs, which were stuck together in the magazine, would both be extracted together, resulting either in jamming the operation of the machine or placing two discs on one container. For example, in such machines a serious difficulty heretofore has been that with disc closures having pull tabs, these tabs have jammed the feed, thus causing interruption of the machine.

The invention, in particular, relates to means operating in conjunction with the usual discharge mechanism of such a machine in such manner as to assure that one and only one disc at a time is withdrawn from the magazine.

This invention is primarily aimed at overcoming these difficulties in operation. Other features and advantages of the device, however, will be apparent from the following description considered in relation to the drawings, in which:

Fig. 1 is a top plan view of the machine and a portion of the container conveyor system, showing the relative position of the parts when the machine is in what will be referred to as the rearward position, which is after a container has been sealed and is about to be conveyed away from the machine.

Fig. 2 is a side elevational view of the mechanism in the position indicated in Fig. 1, partially in cross section, and showing a closure disc about to be extracted from the magazine for sealing the next container.

Fig. 3 is a view similar to Fig. 2, but with the parts in a different position in the cycle of operation and showing the next container positioned beneath the closure disc which has been moved into sealing position and which will be referred to as the forward position of the machine.

Fig. 4 is a similar view of a portion of the mechanism and shows the relationship of the various parts during the actual sealing operation.

Fig. 5 is a plan view, partly in section, of the machine in its forward position showing further details of the relationship of the parts as depicted in Fig. 3.

Fig. 6 is a vertical sectional view taken along the line 6—6 of Fig. 5 looking in the direction of the arrows and shows in more detail certain novel features of the invention.

Fig. 7 is an enlarged side elevational view, in cross section, showing a detail of the withdrawal opening leading from the magazine.

Figs. 8, 9 and 10 show in detail the extracting means by which the discs are engaged and withdrawn from the magazine.

A detailed description of the various parts of the machine and their mode of operation is as follows: Referring to Figs. 1, 2 and 3, the motive power for actuating the device is suitably supplied as by a cylindrical cam 1 having a cam groove 13 in which is positioned a cam roller 12 carried on the under side of the rear end of a cam rod 2 mounted for reciprocation in a suitable guide carried by the top plate 8 of the machine frame. The opposite end of cam rod 2 is pivotally attached by a pin 3 to an arm 4 which is pivotally mounted on the fulcrum stud 5. The arm 4 is provided at its driving end with open jaws or fork 6 which engage with a stud 7 rigidly secured to a reciprocable shuttle member 9 and extending downwardly through a slotted opening 8' in the plate 8. Hence it will be seen that upon rotation of the cam 1, the shuttle 9 will be reciprocated rearwardly (Fig. 2) as the cam rod 2 is moved forward, and forwardly (Fig. 3) as the cam rod 2 is moved rearwardly.

It will be seen from Figs. 2 and 3 that the shuttle bar 9 is mounted for reciprocation in a guideway formed in the frame top 8. Positioned directly above and parallel with the shuttle 9 is what will be referred to as a slide bar 11, towards the rear of which is a set screw adjustment 10, adjustably movable along a screw thread 15. This screw adjustment 10 snugly fits into a notch

14, cut through the upper surface of the shuttle 9, so as to transfer motion backward and forward to the slide bar 11, and cause it to move correspondingly with the shuttle while at the same time allowing for any desired longitudinal adjustment between the two.

Referring to Figs. 8, 9 and 10, it will be seen that this bar 11 has two hinged, spring-actuated, draw fingers 16, 16, one located on either side and towards the front end thereof. At the extreme forward end of the bar is an elevated surface 17, the purpose of which will be subsequently described in connection with the operation of the machine.

When the slide bar is moved to the backward extent of its travel, as shown in Figs. 1 and 2, the fingers 16, 16 are positioned beneath and towards the rear of a magazine 18 which contains the stack of discs 19, and the fingers are so located and adjusted as to engage with a rear rim portion of the bottom-most disc in the magazine. Immediately in front of the magazine, and held in a raised position by the elevated surface 17, is a spring actuated gate 20 which tends to move downward to obstruct an open slot provided at the front lower portion of the magazine and through which the discs are normally withdrawn, Figs. 2 and 7.

Immediately behind the shuttle 9, and in contacting alignment therewith, is a set screw 22, the forward end of which is adjustably offset from a triangular shaped plate 23, in the upper corners of which there are two relatively fixed striker rods 24, 24, which extend forward and are slidably mounted on the frame of the machine. Two compression springs 21, 21, working against respective set collars 25, 25 locked on corresponding rods 24, 24, tend to normally force the rods, plate, and set screw forward. This forward motion causes each rod to strike against the lower extremity of the rocker arms 26, 26, which moves them about the pivot point 27, against the relatively similar force of the springs 45—45, to raise the lift plungers 28, 28, each provided with a widened lift foot 29 at its lower extremity. These lift feet 29, 29 (Fig. 6), when raised, engage with the bottom of the stack of discs 19 and elevate them slightly, the purpose of which will subsequently be explained in more detail.

In addition to the set of lift feet 29, the machine embodies another set of members for elevating the stack of discs above the level at which the draw fingers 16, 16 can engage with the bottom-most disc. These members are the sliding lift bars 30, 30 located below the magazine and one on either side of the shuttle and slide bar 9. These are connected together by the cross pin 31, and slide back and forth together in grooves formed in the frame of the machine (Figs. 1 and 6). As the shuttle approaches its forward position, the front portion 32 thereof strikes against and carries forward the cross pin 31 which moves the bars 30 to their forward position (Fig. 3). As the bars move forward, two sets of fixed pins 33, 33, mounted in the frame of the machine, engage with corresponding cam curves 34 cut through the bars 30 to lift the bars into elevated position (Figs. 3, 6 and 7). When thus raised, the upper surface of each bar is considerably higher than the top of the slide bar 11, thus lifting the stack of discs in the magazine to a position above the reach of the draw fingers 16, 16, so that when the lift bars 30 are holding up the stack of discs the slide bar 11 may move backward and forward any number of times without the fingers 16, 16 engaging a disc and drawing it out from the bottom of the magazine.

While the forward movement of the shuttle will lift the bars into elevated position, any subsequent movement of the shuttle will be ineffectual to change the position of the bars which remain raised until a cup, in the process of being sealed, lifts a set of trip arms 35, which engage with the forward edge of the bars 30 and slide them backwards, allowing them to drop downward so that the fingers 16, 16 may upon their next initial forward movement engage the bottom-most disc for withdrawal from the magazine.

When a disc has been engaged by the fingers, it is withdrawn through the gate 20 and carried forward to the position shown in Figs. 3 and 5 where it is engaged by another set of fingers 36, 36, one on each side of the disc, which are urged inward by the springs 37, so as to firmly grip the opposite edges of the disc and hold it stationary directly above the container 37 when the slide bar moves backward again (Fig. 7).

The containers, which have previously been filled, are placed on the belts 38 (Figs. 1 and 2) which convey them to the sealing station where each in its turn is momentarily stopped by two bars 39 which rise upwards, in timed relation with the operation of the machine, to intercept the passage of the container. Positioned above the container and fixedly mounted to the frame of the machine is a disc-feed mandrel 40 corresponding approximately in diameter with that of the discs. Vertically slidable on a supporting shaft 41 of this mandrel is a cap member 42 which projects downward and flares out conically below the mandrel. The fingers 36, 36 and the trip arms 35 are mounted directly upon a portion of this cap member and move vertically up and down therewith.

After the container has been stopped in its horizontal movement by the bars 39, two plates 43, which also operate in timed relation with the rest of the machine, rise up and, engaging the bottom edges of the container (Fig. 4), lift it upwards until, guided into place by the conically flaring projections of the cap member, the upper rim of the container abuts against an inner flange 44, which causes the member 42 to be lifted upward by the container. This brings the disc which is gripped by the fingers 36 into contact with the face of the mandrel which then, while the container continues to rise, presses the disc out of engagement with the fingers and into sealing engagement with the mouth of the container. As will be seen from comparing Figs. 3 and 4, the upward movement of the trip arms 35 has moved the lift bars 30 rearward allowing them to fall and lower the stack of discs 19, so that the fingers 16 when next moved forward will again engage with the bottom-most disc.

After the container has been sealed, the plates 43 and the bars 39 are lowered, allowing the sealed container to once more rest on the belts 38 and be conveyed away from the machine.

As can be seen from the preceding description, it was the presence of the container below the mandrel which caused the member 42 to rise, actuate the trip arms 35, and press the disc from between the fingers 36. If for some reason no cup has been conveyed to the sealing station, the upward movement of the plates 43 would have been without any effect upon the disc dispensing mechanism: that is to say, the disc would have remained positioned between the fingers 36 and

the lift bars 30, not having been released, would continue to prevent the withdrawal of another disc from the magazine until a container had risen to receive the disc already awaiting it.

While the above feature assures that discs are withdrawn only when required, the lift feet 29, quite an independent device which is in continuous operation, assure that when blanks are allowed to be withdrawn from the magazine, only one at a time may be withdrawn.

As previously described, the movement of the shuttle 9, as it starts forward accompanied by the slide bar 11, allows the compressed springs 21 to expand and urge the striker rods 24 forward against the arm 26 which is impelled upward rather suddenly, so as to draw up the lift plungers and feet 29 with somewhat of a jerk each time the shuttle and slide bar move forward. This continued jerking upward of the stack of discs tends to loosen any discs which may have become stuck together. Even after this loosening action, and especially when the magazine has a great quantity of discs piled up, there is a tendency, due to the downward pressure of the discs, that the bottom-most disc when being withdrawn by the fingers 16 will frictionally pull one or more adjacent discs along with it. In order to overcome this tendency, the weight of the stack is removed from the bottom-most disc almost immediately after the disc starts forward. The device is so adjusted through the set screw 22 that as soon as the fingers 16 (Fig. 1) have moved the bottom disc far enough forward to clear the lift feet 29, the rods 24 strike the arms 26 to lift the weight of the stack off the bottom disc which is being drawn out from the magazine.

When the shuttle moves back to the rearward position (Fig. 2), the relatively stronger springs 21 are again compressed, allowing the relatively weaker springs 45 to return the lift feet 29 (Fig. 6) downward and out of engagement with the bottom of the stack.

Having thus described my invention with particularity with reference to its preferred form, it will be obvious to those skilled in the art, after understanding my invention, that other changes and modifications may be made therein without departing from the spirit and scope of my invention, and I aim in the appended claims to cover such changes and modifications as are within the scope of the invention.

What I claim is:

1. In a machine of the character described, the combination of means for holding a supply of covers in vertical stack formation, means for feeding the bottom-most cover from said stack to a sealing station, spaced apart vertically movable feet positioned adjacent the rear of and beneath said stack for vertical movement, means for lifting said feet to raise said stack positioned thereover, and control means for said lifting means actuated by the forward movement of said feeding means, said control means being so constructed and arranged that said bottom-most cover being fed is moved forward beyond said feet before said feet are lifted to raise the remainder of said stack.

2. In a machine of the character described, the combination of means for holding a supply of covers in vertical stack formation, means for feeding the bottom-most cover from said stack to a sealing station, means for inhibiting the feeding of a cover until the preceding one has been applied, and means operating in timed relation to said feeding means for lifting the remainder of said stack after said feeding means has commenced to feed the bottom-most cover therefrom said lifting means comprising an upwardly movable member having a horizontally extending foot portion at its lower end and positioned beneath the stack so that when raised said foot portion engages with a rearward bottom portion of the stack to lift it upwards, said lifting means also comprising spring means for raising said foot portion and being constructed and arranged so as to be controlled by the position of said feeding means for exerting an intermittent lifting force upon said foot portion, and a second spring means constructed and arranged to exert a relatively constant and relatively weaker force upon said foot portion to restore it to its downward position alternately of said lifting periods.

HENRY BLANN.