(No Model.) 3 Sheets—Sheet 1.

F. H. SHELTON.

GAS GENERATOR.

No. 563,328. Patented July 7, 1896.

Fig. 1.

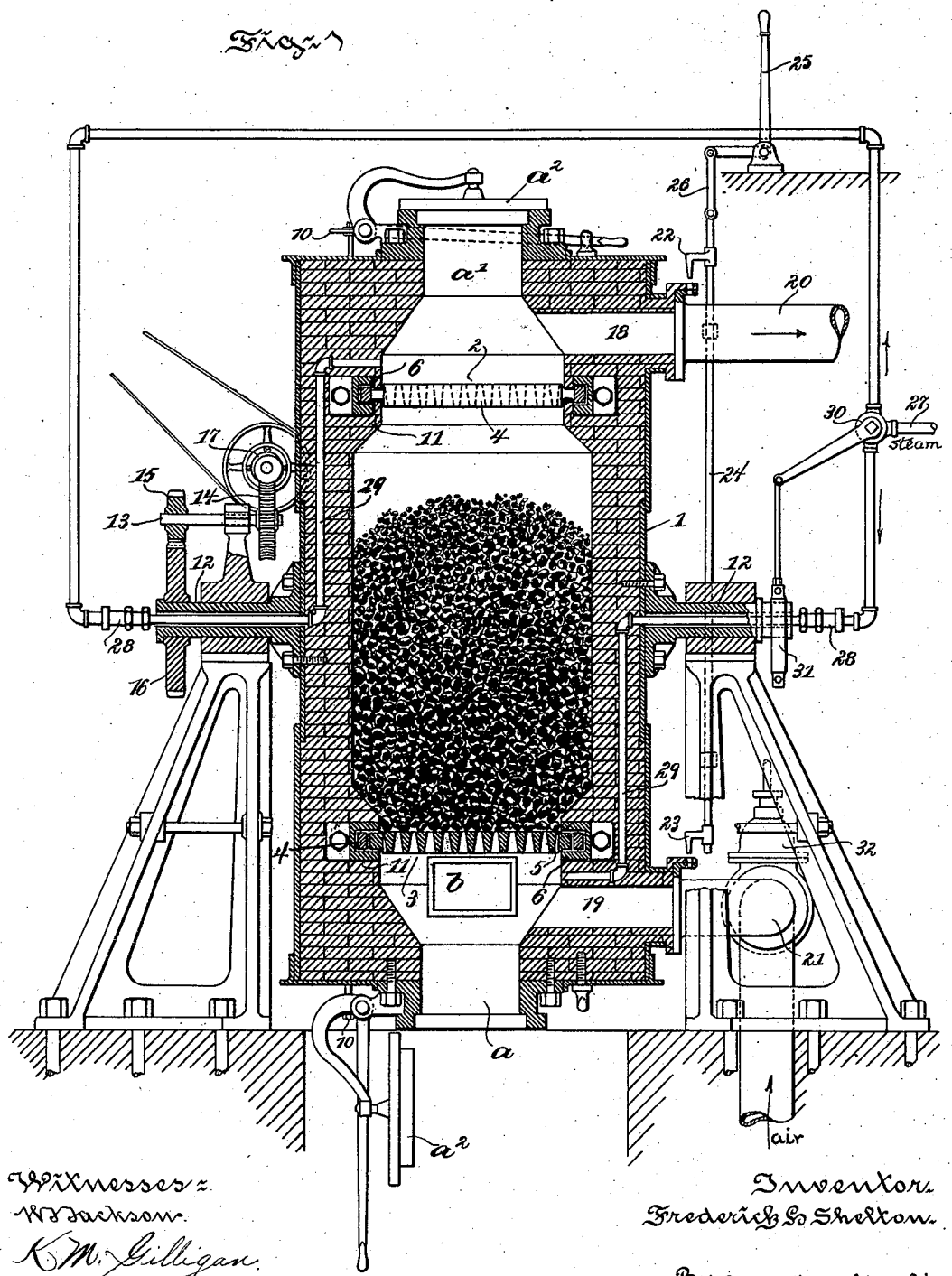

Witnesses:
W. Jackson.
K. M. Gilligan.

Inventor:
Frederick H. Shelton.
By Augustus B. Stoughton
Attorney.

THE NORRIS PETERS CO., PHOTO-LITHO., WASHINGTON, D. C.

(No Model.) 3 Sheets—Sheet 2.

F. H. SHELTON.

GAS GENERATOR.

No. 563,328. Patented July 7, 1896.

Fig. 2.

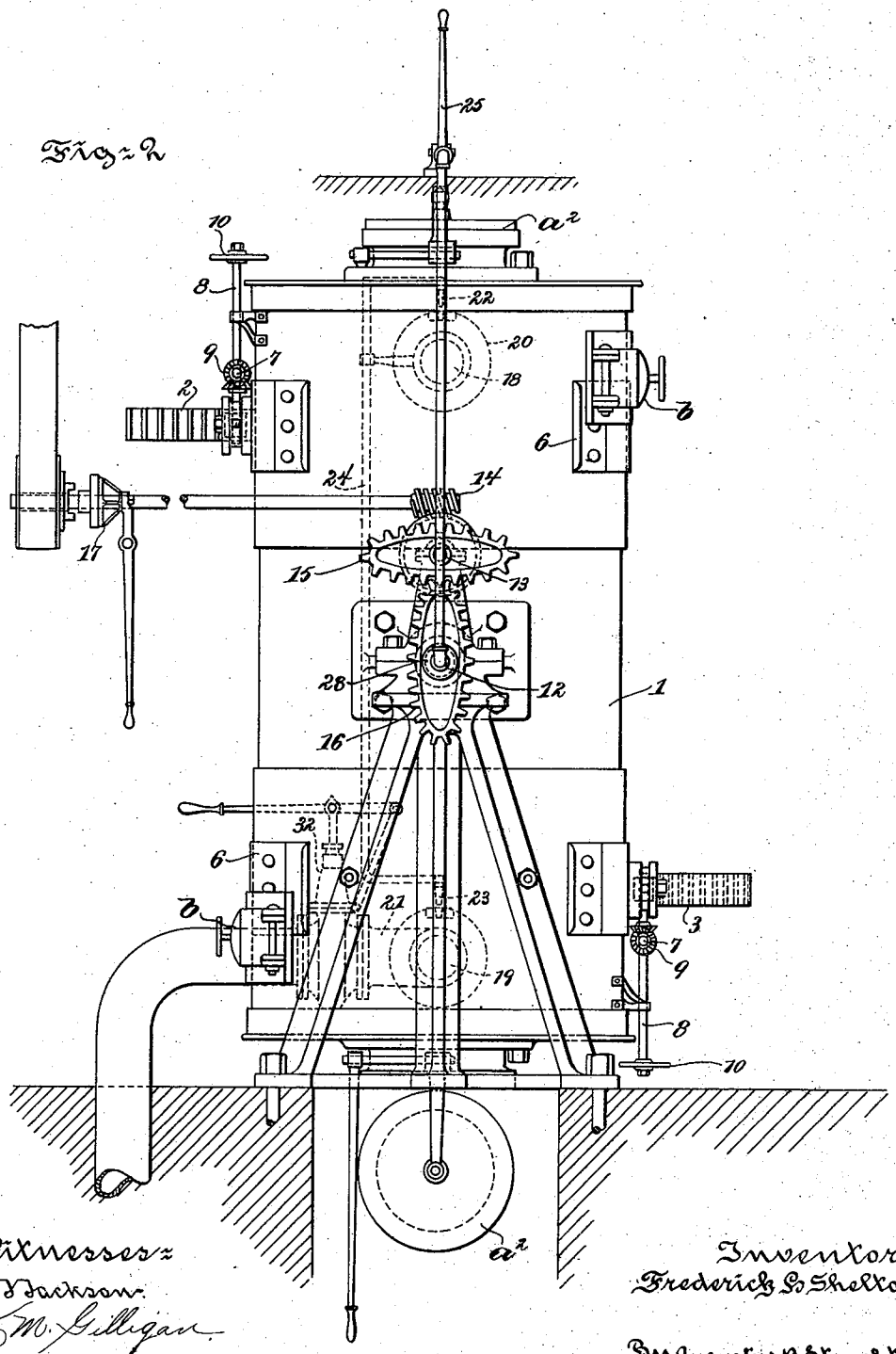

Witnesses:
W. J. Jackson.
K. M. Gilligan.

Inventor:
Frederick S. Shelton.
By Augustus B. Stoughton
Attorney.

THE NORRIS PETERS CO., PHOTO-LITHO., WASHINGTON, D. C.

(No Model.) 3 Sheets—Sheet 3.

F. H. SHELTON.

GAS GENERATOR.

No. 563,328. Patented July 7, 1896.

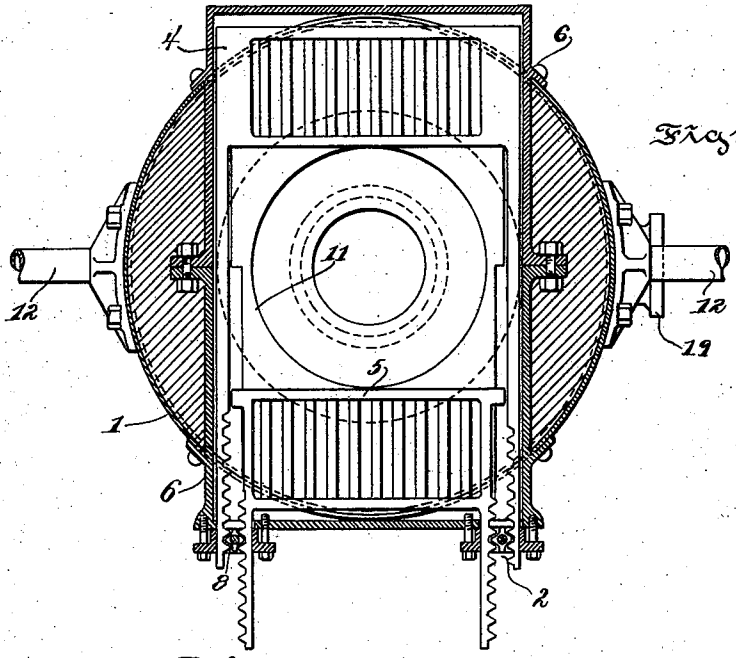

Fig. 3

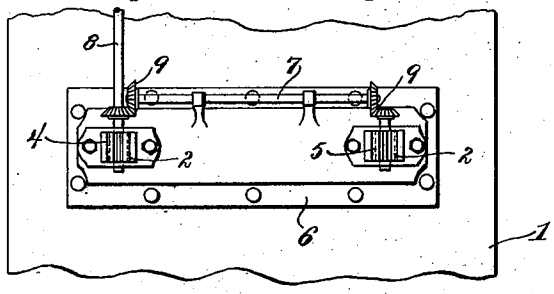

Fig. 4

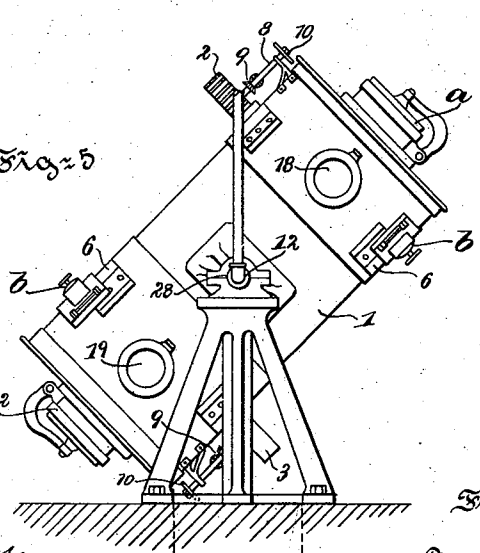

Fig. 5

Witnesses:
W. J. Jackson.
K. M. Gilligan.

Inventor.
Frederick H. Shelton.
By Augustus B. Stoughton
Attorney.

THE NORRIS PETERS CO., PHOTO-LITHO., WASHINGTON, D. C.

UNITED STATES PATENT OFFICE.

FREDERICK H. SHELTON, OF PHILADELPHIA, PENNSYLVANIA, ASSIGNOR TO THE UNITED GAS IMPROVEMENT COMPANY, OF SAME PLACE.

GAS-GENERATOR.

SPECIFICATION forming part of Letters Patent No. 563,328, dated July 7, 1896.

Application filed March 2, 1896. Serial No. 581,486. (No model.)

To all whom it may concern:

Be it known that I, FREDERICK H. SHELTON, a citizen of the United States, residing at the city of Philadelphia, in the county of Philadelphia and State of Pennsylvania, have invented certain new and useful Improvements in Gas-Generators, of which the following is a specification.

The principal object of my present invention is to reduce the consumption of fuel by promoting combustion, by obviating caking of the fire, by preventing the existence of a comparatively cool or dead layer of fuel at the base of the generator, and by enhancing the facilities for removing clinker.

To these ends my invention comprises the improvements hereinafter described and claimed.

The nature, characteristic features, and scope of my invention will be more fully understood from the following description, taken in connection with the accompanying drawings, forming part hereof, in which—

Figure 1 is a central sectional view of apparatus embodying features of my invention. Fig. 2 is a side elevational view of the same. Fig. 3 is a sectional view showing a plan of one of the grates illustrated in Fig. 1. Fig. 4 is an elevational view of a portion of the apparatus illustrated in Fig. 3, and Fig. 5 is a view illustrative of the mode of operation of apparatus embodying features of my invention.

For the sake of description I have shown my invention in application to a generator adapted for use in connection with apparatus of the Lowe type for producing water-gas, but it is applicable to other types of gas-producing apparatus.

In the drawings, 1 is a pivotally-supported generator or combustion chamber which may be turned upside down for the purpose of pouring the fire and thus breaking up cakes of fuel and presenting the same in new relations, whereby combustion is materially promoted and the formation of comparatively hot and cold layers is prevented.

2 and 3 are movable grates disposed above and below the fire and adapted to be brought into operative and inoperative positions. Referring to Figs. 3 and 4, each of these grates comprises two parts or sections 4 and 5, adapted to slide in suitable ways which may be formed in or upon a casting 6, that is built into or otherwise connected with the generator 1. As shown, these grate-sections are provided with racks with which suitable pinions mesh. These pinions in turn may be operated through the intervention of shafts 7 and 8, bevel-gears 9, and hand-wheels 10. The interior walls of the generator 1 may be contracted or boshed, as at 11, in order to afford spaces for the accommodation of the grate-sections in such manner that when drawn into inoperative position they are not unduly exposed to the heat of the fire. The respective ends of the generator are provided with suitable openings, as a and a', adapted to discharge into the ash-pit, and with means, as clapper-valves a^2, for closing them. The opening a or a', which is at the top, is useful for charging in fuel and for permitting of the removal of clinker from the walls adjacent to that end of the generator. I may also provide doors, as b, which are useful when the generator is not operated by turning it upside down and at other times if required.

To turn the generator upside down, one of its trunnions 12 may be provided with a gear-wheel to which power is applied.

For the sake of a description of what I believe to be the best embodiment of my invention, I have shown a counter-shaft 13, to which power is applied by means of a suitably-driven worm 14, and which is provided with an elliptical gear-wheel 15, that meshes with an elliptical gear-wheel 16, and I have also shown a clutch 17 for controlling the operation of these parts. The elliptical gear-wheels present advantages in that motion is transmitted by them slowly to the trunnion in starting and more rapidly thereafter, whereby safety and economy in the application of power to the movement of a heavy generator are insured.

The generator may be provided with twin openings 18 and 19, adapted to come into alinement with an outlet-pipe 20, for example, for gas, and an inlet-pipe 21, for example, for air.

In the embodiment of my invention illus-

trated in the drawings I have shown coupling devices, as wedges 22 and 23, adapted to penetrate openings in ears or lugs connected, respectively, with the generator and with the pipes 20 and 21, so that these wedges afford means for coupling and uncoupling the generator and pipes to prevent leakage or movement during gas-making. Moreover, these wedges are shown in connection with a rod 24, which may be shifted through the intervention of a hand-lever 25 and link 26. If desired, communication may be had with the interior of the generator by way of its trunnions. In the drawings I have shown a pipe 27, that may be used for establishing such communication for the introduction of steam. This pipe 27 is branched, and each branch is provided with a stuffing-box and swivel pipe-joint 28. From the stuffing-box tubes, pipes, or ducts 29 extend through the walls of the generator or otherwise to appropriate points of discharge, for example, to points outside of the grates. If desired, I may provide a three-way cock 30 for directing communication from the pipe 27 by way of either of its branches. This valve 30 may be operated manually or its lever may be connected with the strap of an eccentric 31, which moves with the generator, so that when the generator is turned upside down communication is automatically established from the pipe 27 by way of the branch and duct which leads to and discharges beneath the fire.

The mode of operation of apparatus embodying features of my invention may be described in connection with the accompanying drawings as follows: Air is introduced by way of the pipe 21 until the fire is brought to the required state of incandescence, whereupon the supply of air is shut off, for example, by means of the valve 32. Steam is then permitted to traverse the pipe 27, for example, by opening an appropriate valve, (not shown,) whereupon steam from this pipe 27 is directed by the valve 30 to the branch pipe that discharges beneath the fire. In this connection it may be stated that one of the grates underlies and supports the fire and that the other is in an inoperative position, as shown in Fig. 3, and is protected from the heat of the fire by the walls of the generator. Prior to the succeeding blast, or as soon as the fire has commenced to cake or has commenced to form disadvantageously into layers of different temperatures, the attendant in charge may shut off the steam and air and cause the generator to be turned upside down, as illustrated in Fig. 5. For this purpose he would operate the lever 25, so as to uncouple and subsequently couple the inlet and outlet fittings and shift the grate which was in inoperative position into operative position and the grate which was in operative position into inoperative position by means of the hand-wheels 10, and would operate the clutch 17 for effecting the desired movement of the generator. Afterward he would proceed to operate the generator in its new position in any appropriate manner, for example, as above described. By turning the generator upside down at appropriate times economical combustion of the fuel and beneficial results in the production of gas are attained, because caking of fuel and the formation of comparatively cool layers at the bottom of the fire are avoided by the pouring action to which the fuel is subjected. The pouring action forms compared with the present old style of stationary generator a fresh and increased mixture of the hot or live fuel with the cooler or dead fuel, thus promoting fresh combustion. In addition by turning the generator upside down the comparatively live fuel at the top is brought to the bottom and beneath the comparatively dead portion, so that upon the next application of the blast this dead portion is in best position for rekindling.

It will be obvious to those skilled in the art to which my invention appertains that modifications may be made in details without departing from the spirit thereof. Hence I do not limit myself to the precise construction and arrangement of parts hereinabove set forth, and illustrated in the accompanying drawings; but,

Having thus described the nature and objects of my invention, what I claim as new, and desire to secure by Letters Patent, is—

1. In combination, a generator, grates and means for introducing a blast at its top and bottom ends, and means for turning the generator upside down, substantially as described.

2. In combination, a gas-generator provided with trunnions, bearings adapted to support said trunnions, means for turning the generator upside down, means for introducing a blast, and a grate near each end of the generator, substantially as described.

3. A pivotally-supported gas-generator provided at or near its extremities with movable grates adapted to be shifted into operative and inoperative positions, substantially as described.

4. In combination a pivotally-supported gas-generator provided near its top and bottom ends with openings and grates, means for turning the generator upside down, and pipe connections fixed in respect to the top and bottom ends of the generator and adapted to correspond with the openings at each end thereof, substantially as described.

5. In combination a gas-generator having an opening near its end, means for turning the gas-generator upside down, a fixed pipe connection adapted to correspond with said opening, and devices for coupling and uncoupling the generator and pipe connection to permit of the generator's turning, substantially as described.

6. In combination, a pivotally-supported generator provided at or near its ends with inlet-pipe connections, a valve for said pipe connections, and mechanism connected with

the generator and operated by its turning to control said valve, substantially as described.

7. In combination, a pivotally-supported generator provided at its ends with twin openings and near its ends with movable grates, valves for said openings, and means for turning the generator upside down, substantially as described.

8. In combination, a pivotally-supported generator boshed and provided with recesses near its ends, and grates adapted to said recesses and protected by the boshed portions of the generator, substantially as described.

9. In combination, a generator having at its ends grates and blast connections for gas-making, means for turning the generator, fixed pipe connections located near the top and bottom of the generator and adapted for coöperation with said blast connections and grates, and means for pivotally supporting the generator, substantially as described.

10. In combination, a pivotally-supported generator, movable grates located at or near its ends and adapted to be shifted into operative and inoperative positions, and means for shifting said grates, substantially as described.

11. In combination, a pivotally-supported generator, grates near each end of the generator, and pipe connections through its point of support to its grates, substantially as described.

In testimony whereof I have hereunto signed my name.

FREDERICK H. SHELTON.

Witnesses:

F. H. MACMORRIS,

THOS. A. JAMES.