(19) Europäisches Patentamt
European Patent Office
Office européen des brevets

(11) **EP 1 780 483 A1**

(12) **EUROPEAN PATENT APPLICATION**
published in accordance with Art. 158(3) EPC

(43) Date of publication:
02.05.2007 Bulletin 2007/18

(21) Application number: **05758333.8**

(22) Date of filing: **07.07.2005**

(51) Int Cl.:
F25D 11/00 *(2006.01)*

(86) International application number:
PCT/JP2005/012556

(87) International publication number:
WO 2006/011344 (02.02.2006 Gazette 2006/05)

(84) Designated Contracting States:
DE FR GB IT

(30) Priority: **29.07.2004 JP 2004221611**

(71) Applicant: **SHARP KABUSHIKI KAISHA**
Osaka-shi, Osaka 545-8522 (JP)

(72) Inventors:
- **FUKAYA, Mizuho**
  Yao-shi, Osaka 581-0068 (JP)
- **CHEN, Wei**
  Yamatokoriyama-shi, Nara 639-1141 (JP)
- **TATSUMI, Hiroshi**
  Shiki-gun, Nara 636-0304 (JP)

(74) Representative: **Brown, Kenneth Richard**
R.G.C. Jenkins & Co.
26 Caxton Street
London SW1H 0RJ (GB)

(54) COOLING BOX

(57) The controller (86) of a cooling box is configured such that when the temperature (Th) of the warm head of a Stirling refrigerating machine (30) exceeds a reference temperature (Th1), it maximizes the speed of a heat radiation fan (53) and the output of a circulation pump (61), and minimizes the output of the Stirling refrigerating machine (30). If the temperature (Th) of the warm head exceeds a critical temperature (Th2) even after this control, it stops the Stirling refrigerating machine (30). Therefore, as compared with the case of stopping the Stirling refrigerating machine (30) immediately after the temperature (Th) of the warm head has exceeded the critical temperature (Th2), the reliability of the cooling box can be improved.

FIG.3

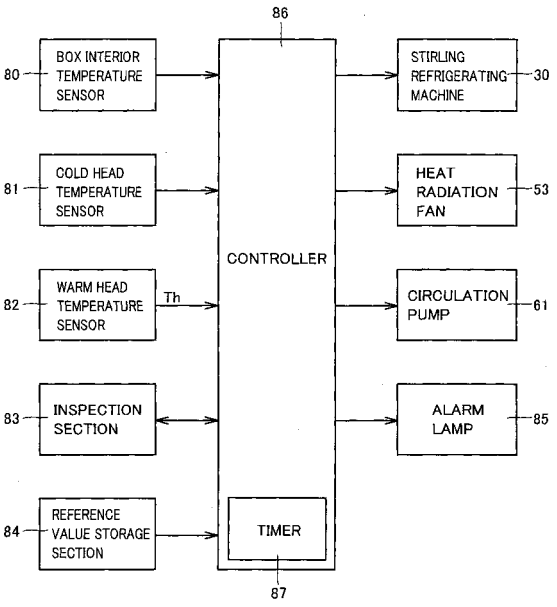

EP 1 780 483 A1

Description

Technical Field

[0001] The present invention relates to a cooling box, and particularly to a cooling box incorporating a Stirling refrigerating machine.

Background Art

[0002] In recent years, adverse effects of the chlorofluorocarbons on the global environment have been pointed out, and as a cooling box that does not use the chlorofluorocarbons, one provided with a Stirling refrigerating machine has attracted attention. In this cooling box, the space inside the box is cooled by cold heat of the cold head of the Stirling refrigerating machine, while hot heat of the warm head of the Stirling refrigerating machine is radiated to the environment outside the box (see, for example, Japanese Patent Laying-Open No. 2002-221384).
Patent Document 1: Japanese Patent Laying-Open No. 2002-221384

Disclosure of the Invention

Problems to be Solved by the Invention

[0003] In such a cooling box, if the temperature of the warm head of the Stirling refrigerating machine increases by some reason to reach a critical temperature, it may be possible to stop the Stirling refrigerating machine immediately. With this control method, however, the operation of the cooling box will be stopped abruptly, which leads to impairment of reliability of the cooling box.
[0004] Accordingly, a primary object of the present invention is to provide a cooling box of high reliability.

Means for Solving the Problems

[0005] A cooling box according to the present invention is a cooling box incorporating a Stirling refrigerating machine, which includes: temperature detection means for detecting a temperature of a warm head of the Stirling refrigerating machine; and control means for controlling such that an increase of the temperature of the warm head is restricted before the Stirling refrigerating machine is stopped, in response to the event that the temperature detected by the temperature detection means has exceeded a predetermined reference temperature.
[0006] Preferably, a heat radiator receiving hot heat from the warm head of the Stirling refrigerating machine via a refrigerant and performing heat radiation to an environment outside the box; and a heat radiation fan promoting the heat radiation of the heat radiator are further provided. The control means maximizes the quantity of air supplied by the heat radiation fan in response to the event that the temperature detected by the temperature detection means has exceeded the reference temperature and, thereafter, reduces an output of the Stirling refrigerating machine when the temperature detected by the temperature detection means does not become lower than the reference temperature even after a lapse of a predetermined time.
[0007] Further, preferably, a refrigerant circulation circuit transmitting the hot heat of the warm head to an outer wall surface of the box via the refrigerant to prevent condensation is further provided. The control means maximizes the quantity of the refrigerant circulated in the refrigerant circulation circuit in response to the event that the temperature detected by the temperature detection means has exceeded the reference temperature and, thereafter, reduces an output of the Stirling refrigerating machine when the temperature detected by the temperature detection means does not become lower than the reference temperature even after a lapse of a predetermined time.
[0008] Further, preferably, a heat radiator receiving hot heat from the warm head of the Stirling refrigerating machine via a refrigerant and performing heat radiation to an environment outside the box; a heat radiation fan promoting the heat radiation of the heat radiator; and a refrigerant circulation circuit transmitting the hot heat of the warm head to an outer wall surface of the box via the refrigerant to prevent condensation are further provided. The control means maximizes the quantity of air supplied by the heat radiation fan in response to the event that the temperature detected by the temperature detection means has exceeded the reference temperature and, thereafter, maximizes the quantity of the refrigerant circulated in the refrigerant circulation circuit when the temperature detected by the temperature detection means does not become lower than the reference temperature even after a lapse of a first predetermined time, and reduces an output of the Stirling refrigerating machine when the temperature detected by the temperature detection means does not become lower than the reference temperature even after a lapse of a second predetermined time.
[0009] Further, preferably, a heat radiator receiving hot heat from the warm head of the Stirling refrigerating machine via a refrigerant and performing heat radiation to an environment outside the box; a heat radiation fan promoting the heat radiation of the heat radiator; and a refrigerant circulation circuit transmitting the hot heat of the warm head to an outer wall surface of the box via the refrigerant to prevent condensation are further provided. The control means maximizes the quantity of the refigerant circulated in the refrigerant circulation circuit in response to the event that the temperature detected by the temperature detection means has exceeded the reference temperature and, thereafter, maximizes the quantity of air supplied by the heat radiation fan when the temperature detected by the temperature detection means does not become lower than the reference temperature even after a lapse of a first predetermined time,

and reduces an output of the Stirling refrigerating machine when the temperature detected by the temperature detection means does not become lower than the reference temperature even after a lapse of a second predetermined time.

[0010] Preferably, the control means reduces the output of the Stirling refrigerating machine in a stepwise manner in response to the event that the temperature detected by the temperature detection means has exceeded the reference temperature.

[0011] Still preferably, the control means stops the Stirling refrigerating machine in response to the event that the temperature detected by the temperature detection means has exceeded a predetermined critical temperature higher than the reference temperature.

[0012] Still preferably, the cooling box further includes inspection means for inspecting whether the temperature detection means is normal or not in response to the event that the temperature detected by the temperature detection means has exceeded the reference temperature.

Effects of the Invention

[0013] In the cooling box of the present invention, it is controlled to restrict an increase in temperature of the warm head of the Stirling refrigerating machine before stopping the Stirling refrigerating machine in response to the event that the temperature of the warm head has exceeded a reference temperature. Accordingly, it is possible to prevent the cooling box from being stopped abruptly, and thus to increase the reliability of the cooling box.

[0014] Preferably, the quantity of the air supplied by the heat radiation fan is maximized in response to the event that the temperature of the warm head has exceeded the reference temperature, and thereafter, if the temperature of the warm head does not become lower than the reference temperature even after a lapse of a predetermined time, the output of the Stirling refrigerating machine is reduced. In this case, the temperature of the warm head can firstly be lowered without increasing the temperature inside the box. This can increase the reliability of the cooling box.

[0015] Still preferably, the quantity of the refrigerant circulated in the refrigerant circulation circuit is maximized in response to the event that the temperature of the warm head has exceeded the reference temperature, and thereafter, if the temperature of the warm head does not become lower than the reference temperature even after a lapse of a predetermined time, the output of the Stirling refrigerating machine is reduced. In this case as well, the temperature of the warm head can firstly be lowered without increasing the temperature inside the box, and thus, the reliability of the cooling box can be increased.

[0016] Still preferably, the quantity of the air supplied by the heat radiation fan is maximized in response to the event that the temperature of the warm head has exceeded the reference temperature, and thereafter, if the temperature of the warm head does not become lower than the reference temperature even after a lapse of a first predetermined time, the quantity of the refrigerant circulated in the refrigerant circulation circuit is maximized, and further, if the temperature of the warm head does not become lower than the reference temperature even after a lapse of a second predetermined time, the output of the Stirling refrigerating machine is reduced. In this case as well, the temperature of the warm head can firstly be lowered without increasing the temperature inside the box, and thus, the reliability of the cooling box can be increased.

[0017] Still preferably, the quantity of the refrigerant circulated in the refrigerant circulation circuit is maximized in response to the event that the temperature of the warm head has exceeded the reference temperature, and thereafter, if the temperature of the warm head does not become lower than the reference temperature even after a lapse of a first predetermined time, the quantity of the air supplied by the heat radiation fan is maximized, and further, if the temperature of the warm head does not become lower than the reference temperature even after a lapse of a second predetermined time, the output of the Stirling refrigerating machine is reduced. In this case as well, the temperature of the warm head can firstly be lowered without increasing the temperature inside the box, and thus, the reliability of the cooling box can be increased.

[0018] Preferably, the output of the Stirling refrigerating machine is reduced in a stepwise manner. This can restrict the increase in temperature inside the box.

[0019] Still preferably, the Stirling refrigerating machine is stopped in response to the event that the temperature of the warm head has exceeded a critical temperature higher than the reference temperature. This can prevent a failure of the Stirling refrigerating machine.

[0020] Still preferably, there is further provided inspection means for inspecting whether the temperature detection means is normal or not in response to the event that the temperature detected by the temperature detection means has exceeded the reference temperature. This can prevent malfunction of the cooling box due to a failure of the temperature detection means.

Brief Description of the Drawings

[0021]

Fig. 1 is a cross sectional view showing a configuration of a cooling box according to an embodiment of the present invention.

Fig. 2 is a piping configuration diagram of the cooling box shown in Fig. 1.

Fig. 3 is a block diagram showing a configuration of a part related to operation control of the cooling box shown in Fig. 1.

Fig. 4 is a part of a flowchart showing an operation

of the controller shown in Fig. 3.

Fig. 5 is the other part of the flowchart shown in Fig. 4.

Description of the Reference Signs

[0022] 1: cooling box; 10: housing; 11, 12, 13: cooling compartment; 14, 15, 16: heat insulating door; 17: packing; 18: shelf; 19: machine room; 20: duct; 21: cool air blowoff port; 22: cooling fan; 30: Stirling refrigerating machine; 40: low-temperature side refrigerant circulation circuit; 41: low-temperature side condenser; 42: low-temperature side evaporator; 50, 60: high-temperature side refrigerant circulation circuit; 51: high-temperature side evaporator, 52: high-temperature side condenser; 53: heat radiation fan; 61: circulation pump; 62: condensation preventing section; 70: electric heater; 80: box interior temperature sensor; 81: cold head temperature sensor; 82: warm head temperature sensor; 83: inspection section; 84: reference value storage section; 85: alarm lamp; 86: controller; and 87: timer 87.

Best Modes for Carrying Out the Invention

[0023] Fig. 1 is a schematic cross sectional view showing a configuration of a cooling box 1 according to an embodiment of the present invention. Fig. 2 is a piping configuration diagram of cooling box 1. Referring to Figs. 1 and 2, cooling box 1 is for storing food, and is provided with a housing 10 of heat insulating structure. Cooling compartments 11, 12, 13 partitioned into three parts in the vertical direction are provided inside housing 10. Cooling compartments 11, 12, 13 have openings on the front side (left side in Fig. 1) of housing 10, and the openings are closed by heat insulating doors 14, 15, 16, respectively, which can be opened/closed freely. A packing 17 is provided on the back surface of each of heat insulating doors 14, 15, 16, in the form surrounding the opening of corresponding one of cooling boxes 11, 12, 13. Inside cooling compartments 11, 12, 13, shelves 18 are arranged as appropriate in accordance with the types of food to be stored.

[0024] A cooling system and a heat radiation system having Stirling refrigerating machine 30 as the main element are arranged from the top surface through the back surface to the bottom surface of housing 10. A machine room 19 is provided at a corner on the upper back surface of housing 10, and Stirling refrigerating machine 30 is installed therein.

[0025] A part of Stirling refrigerating machine 30 forms a cold head when driven. A low-temperature side condenser 41 is attached to the cold head. Further, a low-temperature side evaporator 42 is arranged on the back of cooling box 13. Low-temperature side condenser 41 and low-temperature side evaporator 42 are connected via a refrigerant pipe, to constitute a low-temperature side refrigerant circulation circuit 40. Low-temperature side refrigerant circulation circuit 40 has a natural refrigerant such as CO_2 sealed therein, and heat is given and received by low-temperature side evaporator 42 and low-temperature side condenser 41.

[0026] A duct 20 is provided inside housing 10 for distributing cool air obtained by low-temperature side evaporator 42 to cooling compartments 11, 12, 13. Duct 20 has cool air blowoff ports 21 at appropriate positions for communication with cooling compartments 11, 12, 13. Further, cooling fans 22 are arranged inside duct 20 at appropriated positions to forcibly send out the cool air.

[0027] Although not shown in the figure, a duct for collecting the air from cooling compartments 11, 12, 13 is provided inside housing 10. The duct has a blowoff port at the bottom of low-temperature side evaporator 42, to supply low-temperature side evaporator 42 with the air to be cooled, as shown by an arrow of broken line in Fig. 1.

[0028] Another part of Stirling refrigerating machine 30 forms a warm head when driven. A high-temperature side evaporator 51 is attached to the warm head. Further, at the upper surface of housing 10, a high-temperature side condenser (heat radiator) 52 and a heat radiation fan 53 are provided for performing heat radiation to the environment outside the box. High-temperature side evaporator 51 and high-temperature side condenser 52 are connected via a refrigerant pipe, to constitute a high-temperature side refrigerant circulation circuit 50. High-temperature side refrigerant circulation circuit 50 has water (including solution) or hydrocarbon-based natural refrigerant sealed therein, and the refrigerant flows within high-temperature side refrigerant circulation circuit 50 by natural circulation.

[0029] High-temperature side evaporator 51 is connected to a high-temperature side refrigerant circulation circuit 60 as well. High-temperature side refrigerant circulation circuit 60 has a circulation pump 61 forcibly circulating the refrigerant, and a condensation preventing section 62. Circulation pump 61 may be a piezoelectric pump, for example. Condensation preventing section 62 is formed with a part of the refrigerant pipe routed through the openings of cooling compartments 11, 12, 13, and is configured to heat the vicinity of the openings where condensation would likely to occur (the vicinity of the contact portions of packing 17 and housing 10, i.e., the boundary area between the interior and the outside of the box) with the hot heat of the refrigerant to thereby prevent condensation. An electric heater 70 generating heat when energized is attached to the place where occurrence of condensation is expected but high-temperature side refrigerant circulation circuit 60 cannot be placed for the reasons of manufacture.

[0030] Hereinafter, an operation of cooling box 1 having the above configuration will be described. In cooling box 1 configured as described above, when Stirling refrigerating machine 30 is driven, the temperature of the cold head decreases. Thus, low-temperature side condenser 41 is cooled, and the refrigerant therein is condensed.

[0031] The refrigerant condensed at low-temperature side condenser 41 flows through low-temperature side

refrigerant circulation circuit 40 into low-temperature side evaporator 42. The refrigerant flowing into low-temperature side evaporator 42 evaporates with the heat of the air flowing along the outer side of low-temperature side evaporator 42, to thereby reduce the surface temperature of low-temperature side evaporator 42. Thus, the air flowing through low-temperature side evaporator 42 becomes cool air, which is blown into cooling compartments 11, 12, 13 via cool air blowoff ports 21 of duct 20, so that the temperatures in cooling compartments 11, 12, 13 are lowered. Thereafter, the air within cooling compartments 11, 12, 13 returns to low-temperature side evaporator 42 via a duct not shown.

[0032] The refrigerant evaporated at low-temperature side evaporator 42 returns via low-temperature side refrigerant circulation circuit 40 to low-temperature side condenser 41, where it condenses again with its heat deprived. The above-described heat exchange operation is repeated.

[0033] Meanwhile, the heat produced by driving of Stirling refrigerating machine 30 and the heat collected from the interior of the box by the cold head are dissipated from the warm head as exhaust heat. Thus, high-temperature side evaporator 51 is heated, and the refrigerant therein evaporates.

[0034] The refrigerant in the gas phase heated at high-temperature side evaporator 51 flows through high-temperature side refrigerant circulation circuit 50 and enters into high-temperature side condenser 52 provided on the top. The refrigerant flowing into high-temperature side condenser 52 condenses as its heat is deprived by the airflow introduced from the exterior of the box into high-temperature side condenser 52 by heat radiation fan 53. The refrigerant condensed at high-temperature side condenser 52 flows through high-temperature side refrigerant circulation circuit 50 back to high-temperature side evaporator 51, where it evaporates again by receiving the heat. The above-described heat exchange operation is repeated.

[0035] Of the refrigerant saturated inside high-temperature side evaporator 51, the refrigerant in the liquid phase is forcibly circulated by circulation pump 61 to high-temperature side refrigerant circulation circuit 60, and is guided to condensation preventing section 62. Thus, the vicinity of the openings of cooling compartments 11, 12, 13 is heated with the hot heat of the introduced refrigerant. With the configuration described above, the temperature in the vicinity of the openings where condensation would likely occur can be kept at a level not lower than the dew point to prevent condensation, without unnecessary consumption of electric power. At the portion where occurrence of condensation is expected but high-temperature side refrigerant circulation circuit 60 cannot be routed, electric heater 70 is applied with electricity, so that the temperature at the portion can be kept at a level not lower than the dew point to thereby prevent condensation.

[0036] Fig. 3 is a block diagram showing a portion of cooling box 1 related to operation control. In Fig. 3, cooling box 1 includes a box interior temperature sensor 80, a cold head temperature sensor 81, a warm head temperature sensor 82, an inspection section 83, a reference value storage section 84, an alarm lamp 85, and a controller 86. Controller 86 includes a timer 87.

[0037] Box interior temperature sensor 80 is arranged at a prescribed position on a surface of duct 20 on the box interior side, for example, and detects the temperature of the space inside the box and provides a signal indicating the detected value to controller 86. Cold head temperature sensor 81 is provided at the cold head of Stirling refrigerating machine 30, and detects the temperature of the cold head and provides a signal indicating the detected value to controller 86. Warm head temperature sensor 82 is provided at the warm head of Stirling refrigerating machine 30, and detects the temperature Th of the warm head and provides a signal indicating the detected value to controller 86.

[0038] Inspection section 83 carries out an inspection as to whether warm head temperature sensor 82 is normal or not, and provides a signal indicating the result of inspection to controller 86. Reference value storage section 84 is formed of a read only memory such as a ROM, and stores a reference temperature of the space inside the box, a reference temperature of the cold head, a reference temperature Th1 of the warm head, and a critical temperature Th2 of the warm head.

[0039] Alarm lamp 85 is provided on the external surface of heat insulating door 14, for example, and turns on when cooling box 1 fails to operate properly to notify the user of the failure of cooling box 1. Controller 86 controls Stirling refrigerating machine 10, heat radiation fan 53, circulation pump 61 and alarm lamp 85 based on various kinds of information from temperature sensors 80-82, inspection section 83 and reference value storage section 84.

[0040] Figs. 4 and 5 are flowcharts illustrating an operation of controller 86. Controller 86 controls the output of Stirling refrigerating machine 10 such that the detected values of temperature sensors 80-82 coincide with the reference values stored in reference value storage section 84, and also controls the rotation speed of heat radiation fan 53, i.e., the quantity of air supplied thereby. Controller 86 further controls the output of circulation pump 61, i. e., the quantity of the refrigerant circulated in high-temperature side refrigerant circulation circuit 60.

[0041] Further, in step S1, controller 86 determines whether the temperature Th of the warm head is higher than the reference temperature Th1 stored in reference value storage section 84, and if it is not Th > Th1, it carries out step S1 again. If Th > Th1, it proceeds to step S2. In step S2, controller 86 causes inspection section 83 to carry out an inspection as to whether warm head temperature sensor 82 is normal or not. Inspection section 83 checks whether warm head temperature sensor 82 is normal or not, and provides a signal indicating the result of inspection to controller 86.

[0042] In step S3, controller 86 determines whether warm head temperature sensor 82 is normal or not based on the signal from inspection section 83, and if warm head temperature sensor 82 is not normal, it performs temperature sensor abnormality notification processing in step S4, such as turning on of alarm lamp 85, while it proceeds to step S5 if it is normal.

[0043] In step S5, controller 86 determines whether the rotation speed of heat radiation fan 53 is maximum or not, and if it is not maximum, it maximizes the rotation speed of heat radiation fan 53 in step S6. In step S7, it awaits a lapse of a predetermined time, and then proceeds to step S12. If the rotation speed of heat radiation fan 53 is maximum, it proceeds to step S8. Timer 87 is used to count the predetermined time.

[0044] In step S8, controller 86 determines whether the output of circulation pump 61 is maximum or not, and if it is not maximum, it maximizes the output of circulation pump 61 in step S9. In step S10, it awaits a lapse of a predetermined time, and then proceeds to step S12. If the output of circulation pump 61 is maximum, it reduces the output of Stirling refrigerating machine 30 in step S11, and then proceeds to step S12. In step S 11, controller 86 reduces the output of Stirling refrigerating machine 30 from the current value to the minimum value stepwise over a plurality of number of times.

[0045] In step S 12, controller 86 determines whether temperature Th of the warm head is higher than reference temperature Th1 stored in reference value storage section 84, and if Th > Th1 does not hold, it returns to step S1. If Th > Th1, it proceeds to step S 13. In step S 13, controller 86 determines whether the output of Stirling refrigerating machine 30 is minimum or not. If it is not minimum, it returns to step S8. If it is minimum, it proceeds to step S 14.

[0046] In step S 14, controller 86 determines whether temperature Th of the warm head is higher than critical temperature Th2 stored in reference value storage section 84. If Th > Th2 does not hold, it returns to step S8. If Th > Th1, it proceeds to step S15.

[0047] In step S 15, controller 86 performs the warm head abnormality display processing, such as turning on of alarm lamp 85 or the like. In step S16, it stops Stirling refrigerating machine 30, and returns to step S1.

[0048] In the present embodiment, when temperature Th of the warm head exceeds reference temperature Th1, the rotation speed of heat radiation fan 53 is maximized, the output of circulation pump 61 is maximized, and the output of Stirling refrigerating machine 30 is minimized. If temperature Th of the warm head still exceeds critical temperature Th2, Stirling refrigerating machine 30 is stopped. As such, compared to the case where Stirling refrigerating machine 30 is stopped immediately after temperature Th of the warm head exceeds critical temperature Th2, the reliability of cooling box 1 can be increased.

[0049] Although the rotation speed of heat radiation fan 53 has been maximized after maximization of the output of circulation pump 61 in the present embodiment, it is possible to maximize the output of heat radiation fan 53 after maximization of the output of circulation pump 61.

[0050] It should be understood that the embodiments disclosed herein are illustrative and non-restrictive in every respect. The scope of the present invention is defined by the terms of the claims, rather than the description and example above, and is intended to include any modifications and changes within the scope and meaning equivalent to the terms of the claims.

Claims

1. A cooling box incorporating a Stirling refrigerating machine (30), comprising:

temperature detection means (82) for detecting a temperature of a warm head of said Stirling refrigerating machine (30); and
control means (86) for controlling such that an increase of the temperature of said warm head is restricted before stopping of said Stirling refrigerating machine (30), in response to the event that a detected temperature (Th) of said temperature detection means (82) has exceeded a predetermined reference temperature (Th1).

2. The cooling box according to claim 1, further comprising:

a heat radiator (42) receiving hot heat from the warm head of said Stirling refi-igerating machine (30) via a refi-igerant and performing heat radiation to an environment outside the box; and
a heat radiation fan (53) promoting the heat radiation of said heat radiator (42), wherein
said control means (86) is adapted to
maximize (S6) the quantity of air supplied by said heat radiation fan (53) in response to the event that the detected temperature (Th) of said temperature detection means (82) has exceeded said reference temperature (Th1), and
thereafter, reduce (S11) an output of said Stirling refrigerating machine (30) when the detected temperature (Th) of said temperature detection means (82) does not become lower than said reference temperature (Th1) even after a lapse of a predetermined time.

3. The cooling box according to claim 1, further comprising a refrigerant circulation circuit (60) transmitting hot heat of said warm head via a refrigerant to an outer wall surface of the box to prevent condensation, wherein
said control means (86) is adapted to
maximize (S9) the quantity of the refrigerant circu-

lated in said refrigerant circulation circuit (60) in response to the event that the detected temperature (Th) of said temperature detection means (82) has exceeded said reference temperature (Th1), and
thereafter, reduce (S11) an output of said Stirling refrigerating machine (30) when the detected temperature (Th) of said temperature detection means (82) does not become lower than said reference temperature (Th1) even after a lapse of a predetermined time.

4. The cooling box according to claim 1, further comprising:

a heat radiator (42) receiving hot heat from the warm head of said Stirling refrigerating machine (30) via a refrigerant and performing heat radiation to an environment outside the box;
a heat radiation fan (53) promoting the heat radiation of said heat radiator (42); and
a refrigerant circulation circuit (60) transmitting the hot heat of said warm head via the refrigerant to an outer wall surface of the box to prevent condensation, wherein
said control means (86) is adapted to
maximize (S6) the quantity of air supplied by said heat radiation fan (53) in response to the event that the detected temperature (Th) of said temperature detection means (82) has exceeded said reference temperature (Th1), and
thereafter, maximize (S9) the quantity of the refrigerant circulated in said refrigerant circulation circuit (60) when the detected temperature (Th) of said temperature detection means (82) does not become lower than said reference temperature (Th1) even after a lapse of a first predetermined time, and
further, reduce (S11) an output of said Stirling refrigerating machine (30) when the detected temperature (Th) of said temperature detection means (82) does not become lower than said reference temperature (Th1) even after a lapse of a second predetermined time.

5. The cooling box according to claim 1, further comprising:

a heat radiator (42) receiving hot heat from the warm head of said Stirling refrigerating machine (30) via a refrigerant and performing heat radiation to an environment outside the box;
a heat radiation fan (53) promoting the heat radiation of said heat radiator (42); and
a refrigerant circulation circuit (60) transmitting the hot heat of said warm head via the refrigerant to an outer wall surface of the box to prevent condensation, wherein
said control means (86) is adapted to
maximize (S9) the quantity of the refrigerant circulated in said refrigerant circulation circuit (60) in response to the event that the detected temperature (Th) of said temperature detection means (82) has exceeded said reference temperature (Th1), and
thereafter, maximize (S6) the quantity of air supplied by said heat radiation fan (53) when the detected temperature (Th) of said temperature detection means (82) does not become lower than said reference temperature (Th1) even after a lapse of a first predetermined time, and
further, reduce (S11) an output of said Stirling refrigerating machine (30) when the detected temperature (Th) of said temperature detection means (82) does not become lower than said reference temperature (Th1) even after a lapse of a second predetermined time.

6. The cooling box according to claim 1, wherein said control means (86) reduces (S11) the output of said Stirling refrigerating machine (30) in a stepwise manner.

FIG.1

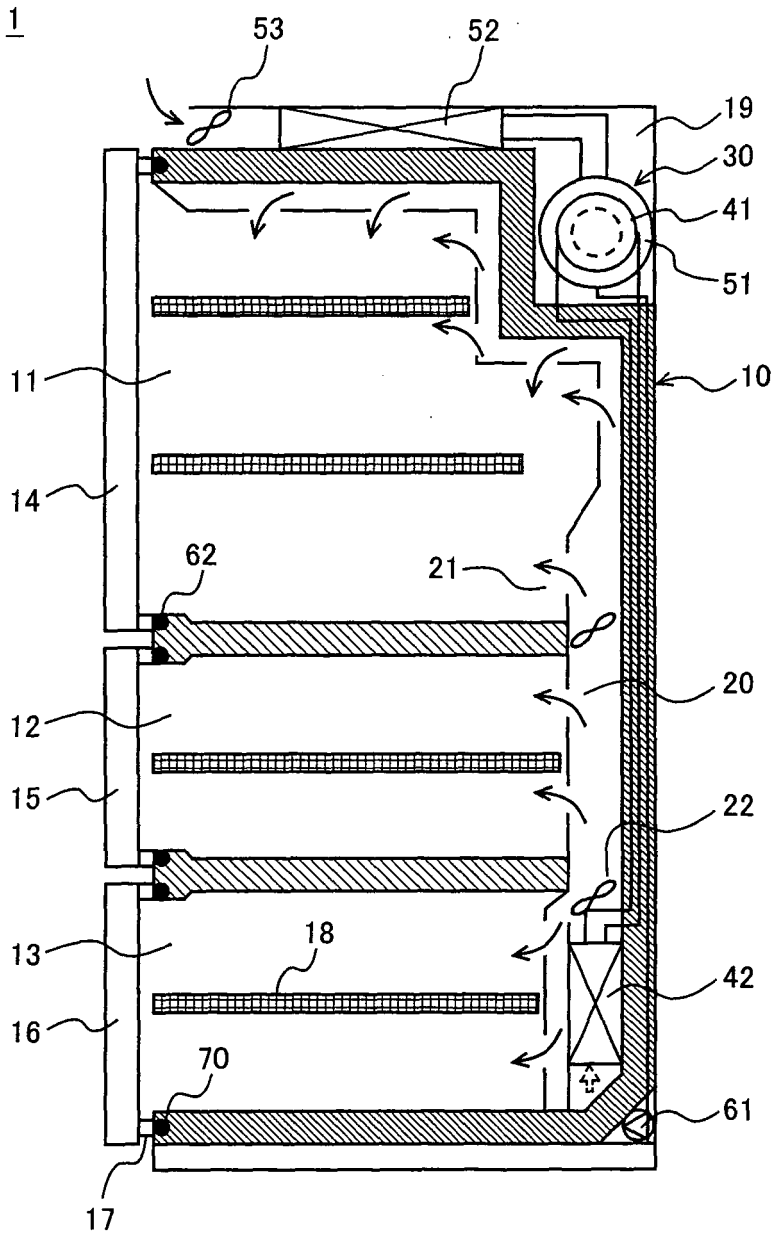

FIG.2

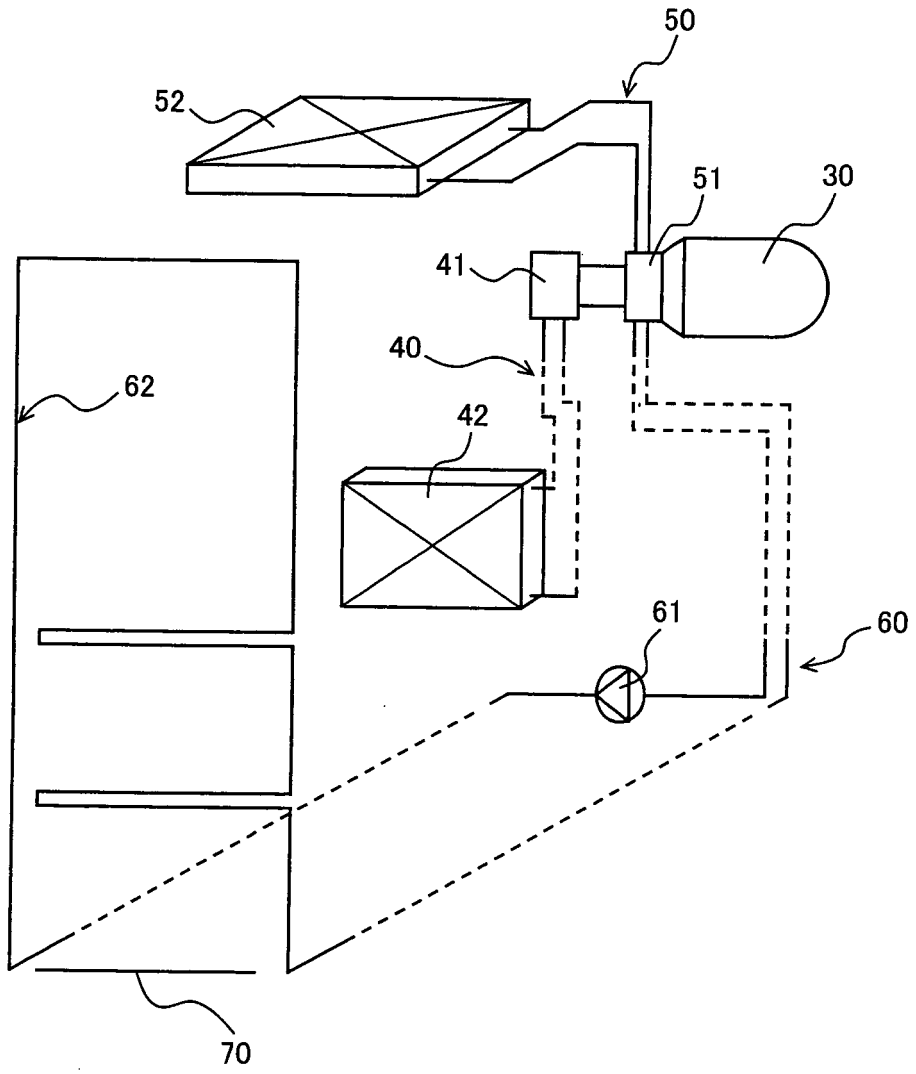

FIG.3

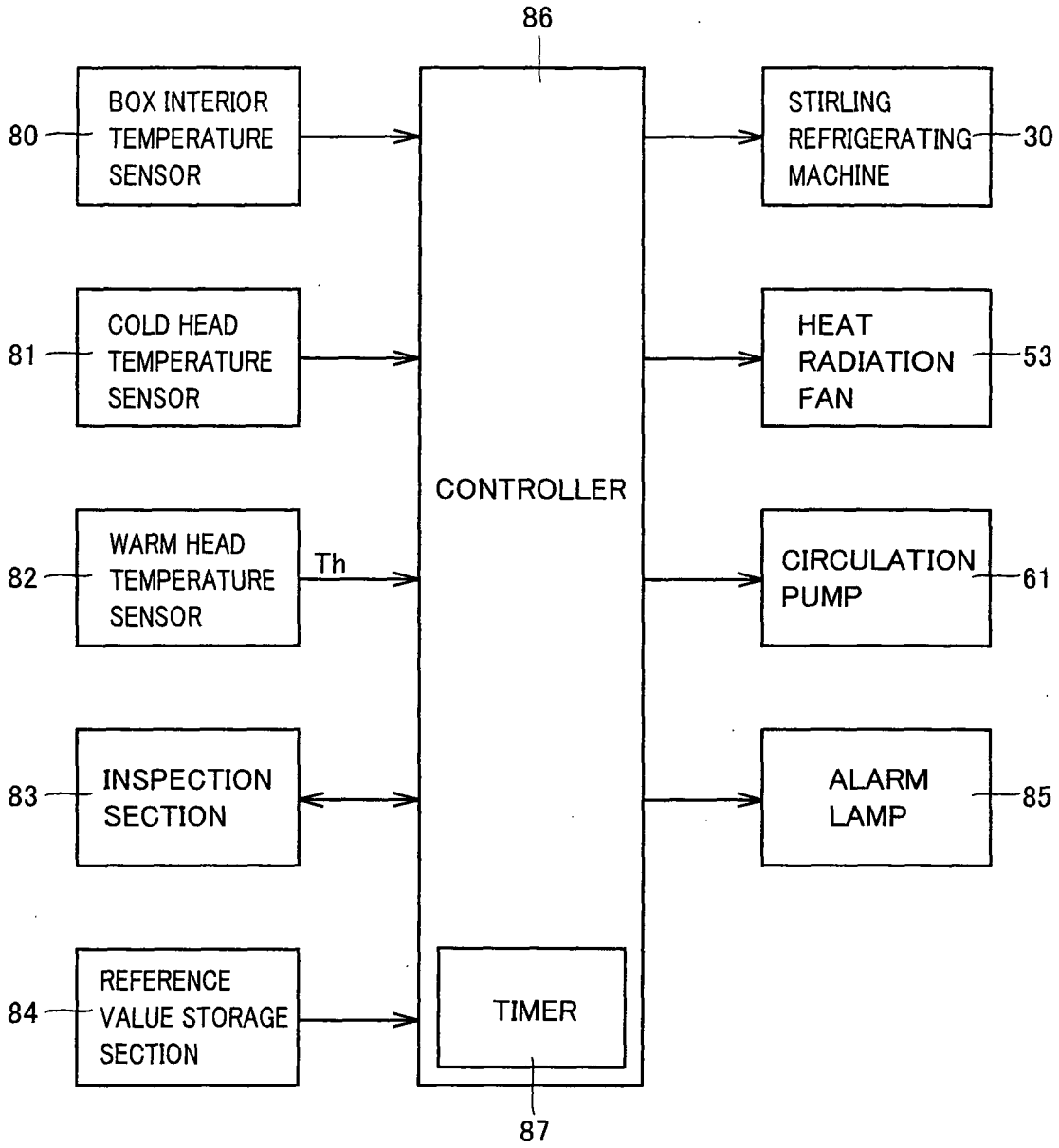
86
80
BOX INTERIOR TEMPERATURE SENSOR
81
COLD HEAD TEMPERATURE SENSOR
82
WARM HEAD TEMPERATURE SENSOR
Th
83
INSPECTION SECTION
84
REFERENCE VALUE STORAGE SECTION
CONTROLLER
TIMER
87
STIRLING REFRIGERATING MACHINE
30
HEAT RADIATION FAN
53
CIRCULATION PUMP
61
ALARM LAMP
85

FIG.4

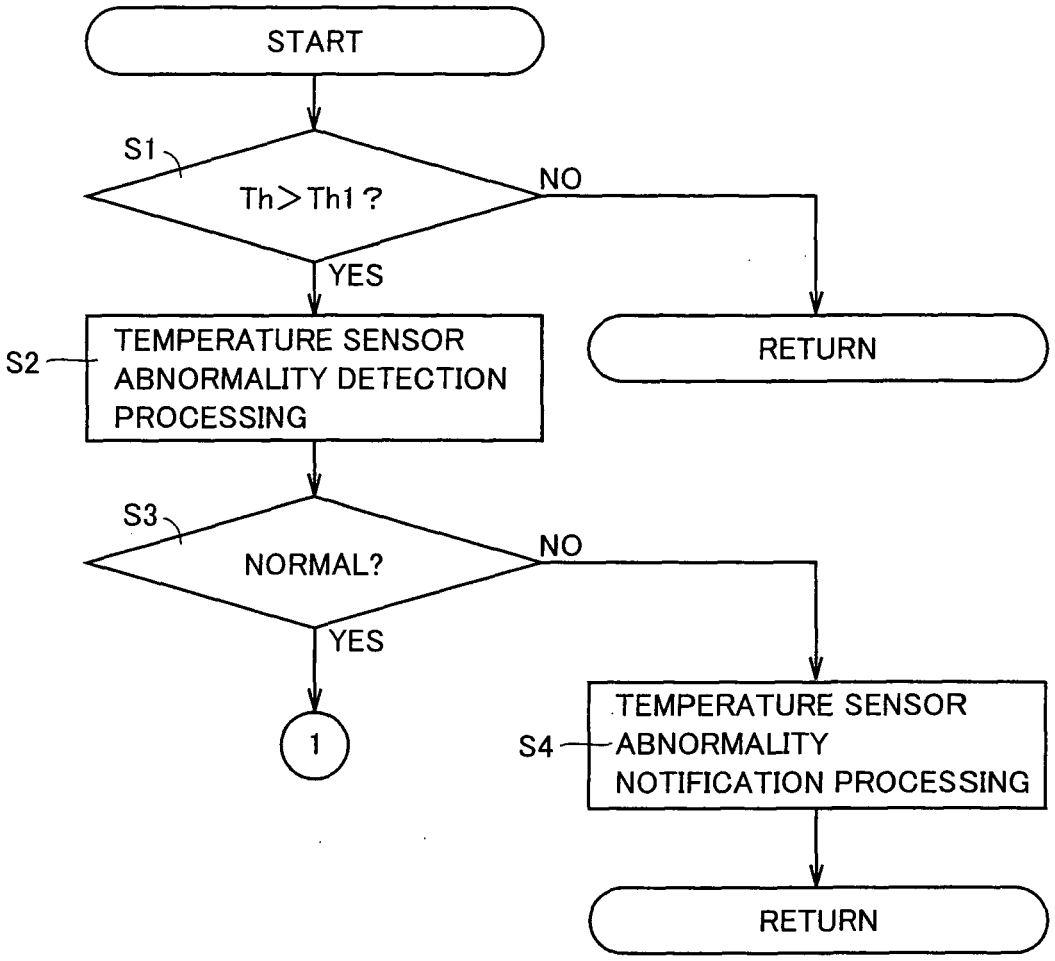
START
S1
Th>Th1?
NO
YES
S2
TEMPERATURE SENSOR ABNORMALITY DETECTION PROCESSING
RETURN
S3
NORMAL?
NO
YES
1
S4
TEMPERATURE SENSOR ABNORMALITY NOTIFICATION PROCESSING
RETURN

FIG.5

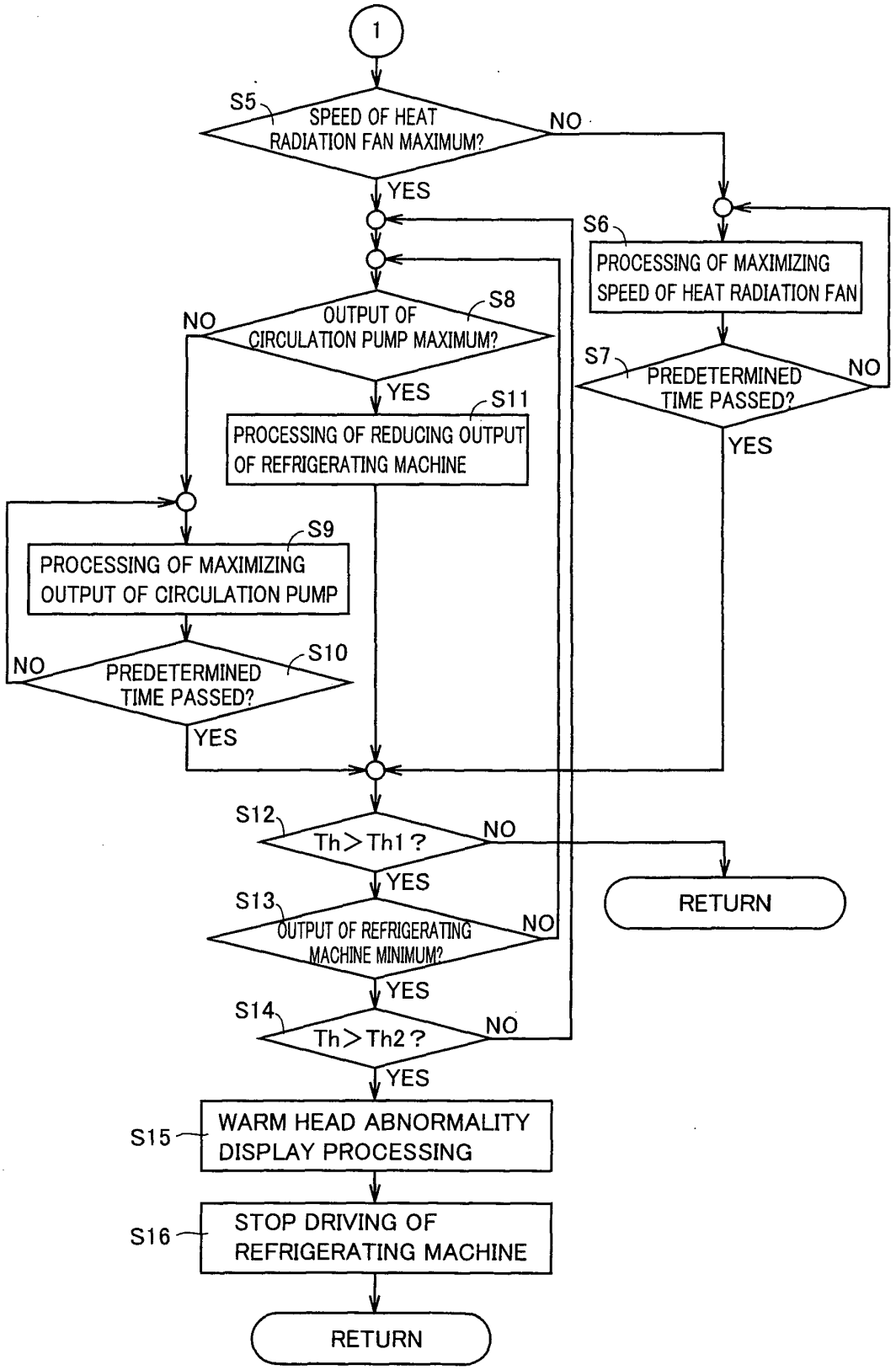
1
S5
SPEED OF HEAT RADIATION FAN MAXIMUM?
NO
YES
S6
PROCESSING OF MAXIMIZING SPEED OF HEAT RADIATION FAN
S7
PREDETERMINED TIME PASSED?
NO
YES
S8
OUTPUT OF CIRCULATION PUMP MAXIMUM?
NO
YES
S11
PROCESSING OF REDUCING OUTPUT OF REFRIGERATING MACHINE
S9
PROCESSING OF MAXIMIZING OUTPUT OF CIRCULATION PUMP
S10
PREDETERMINED TIME PASSED?
NO
YES
S12
Th > Th1 ?
NO
YES
RETURN
S13
OUTPUT OF REFRIGERATING MACHINE MINIMUM?
NO
YES
S14
Th > Th2 ?
NO
YES
S15
WARM HEAD ABNORMALITY DISPLAY PROCESSING
S16
STOP DRIVING OF REFRIGERATING MACHINE
RETURN

INTERNATIONAL SEARCH REPORT

International application No.
PCT/JP2005/012556

A. CLASSIFICATION OF SUBJECT MATTER
Int.Cl[7] F25D11/00

According to International Patent Classification (IPC) or to both national classification and IPC

B. FIELDS SEARCHED

Minimum documentation searched (classification system followed by classification symbols)
Int.Cl[7] F25D11/00

Documentation searched other than minimum documentation to the extent that such documents are included in the fields searched
Jitsuyo Shinan Koho 1922-1996 Jitsuyo Shinan Toroku Koho 1996-2005
Kokai Jitsuyo Shinan Koho 1971-2005 Toroku Jitsuyo Shinan Koho 1994-2005

Electronic data base consulted during the international search (name of data base and, where practicable, search terms used)

C. DOCUMENTS CONSIDERED TO BE RELEVANT

Category*	Citation of document, with indication, where appropriate, of the relevant passages	Relevant to claim No.
Y	JP 2004-101050 A (Sharp Corp.), 02 April, 2004 (02.04.04), Par. Nos. [0023] to [0032]; Figs. 1 to 4 (Family: none)	1-6
Y	JP 2000-18746 A (Sanyo Electric Co., Ltd.), 18 January, 2000 (18.01.00), Par. Nos. [0067] to [0076]; Figs. 8 to 9 (Family: none)	1-6
Y	JP 2003-314937 A (Sharp Corp.), 06 November, 2003 (06.11.03), Par. Nos. [0043] to [0045], [0058] to [0061]; Figs. 1, 4, 10 (Family: none)	1-6

☐ Further documents are listed in the continuation of Box C. ☐ See patent family annex.

* Special categories of cited documents:
"A" document defining the general state of the art which is not considered to be of particular relevance
"E" earlier application or patent but published on or after the international filing date
"L" document which may throw doubts on priority claim(s) or which is cited to establish the publication date of another citation or other special reason (as specified)
"O" document referring to an oral disclosure, use, exhibition or other means
"P" document published prior to the international filing date but later than the priority date claimed
"T" later document published after the international filing date or priority date and not in conflict with the application but cited to understand the principle or theory underlying the invention
"X" document of particular relevance; the claimed invention cannot be considered novel or cannot be considered to involve an inventive step when the document is taken alone
"Y" document of particular relevance; the claimed invention cannot be considered to involve an inventive step when the document is combined with one or more other such documents, such combination being obvious to a person skilled in the art
"&" document member of the same patent family

Date of the actual completion of the international search	Date of mailing of the international search report
04 October, 2005 (04.10.05)	25 October, 2005 (25.10.05)
Name and mailing address of the ISA/ Japanese Patent Office Facsimile No.	Authorized officer Telephone No.

Form PCT/ISA/210 (second sheet) (January 2004)

REFERENCES CITED IN THE DESCRIPTION

This list of references cited by the applicant is for the reader's convenience only. It does not form part of the European patent document. Even though great care has been taken in compiling the references, errors or omissions cannot be excluded and the EPO disclaims all liability in this regard.

Patent documents cited in the description

- JP 2002221384 A **[0002] [0002]**