Dec. 10, 1935. F. L. CREAGER ET AL 2,023,517

ELECTRICAL RESISTANCE DEVICE

Filed July 19, 1932

Fig.1.

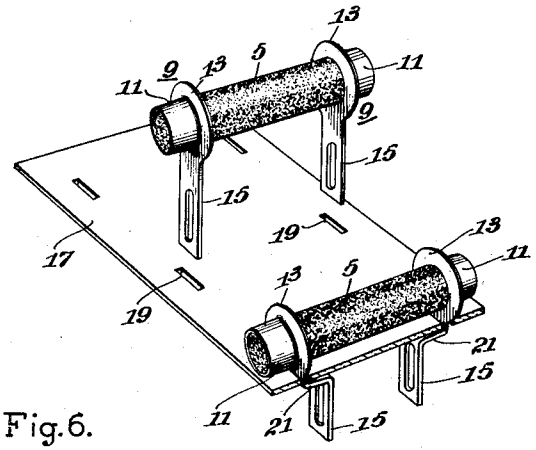


Fig.5.

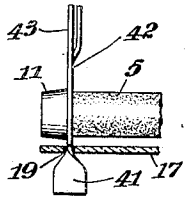


Fig.6.

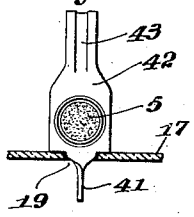


Fig.2.

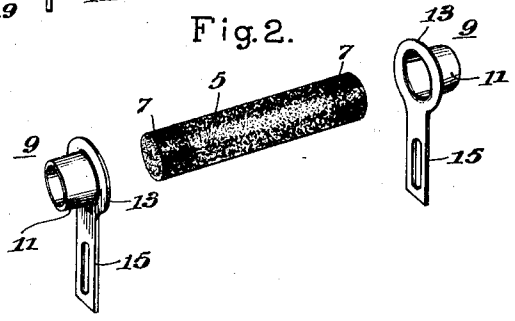


Fig.3.

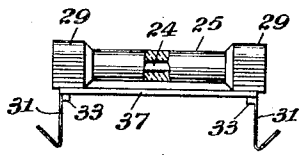


Fig.4.

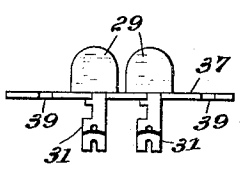


INVENTORS:
*Frederick L. Creager,*
*Wallace W. Dewhurst,*
BY *J. R. Goldsborough*
THEIR ATTORNEY.

Patented Dec. 10, 1935

2,023,517

# UNITED STATES PATENT OFFICE

2,023,517

## ELECTRICAL RESISTANCE DEVICE

Frederick L. Creager, Merchantville, and Wallace W. Dewhurst, Haddon Heights, N. J., assignors to Radio Corporation of America, a corporation of Delaware

Application July 19, 1932, Serial No. 623,328

4 Claims. (Cl. 201—63)

Our invention relates to electrical resistance devices and comprises a novel current conducting and support terminal whereby resistors of the fixed type may be conveniently and effectively connected, as in a radio power supply circuit.

In the devices of this type with which we have been familiar it has been common practice to provide resistors, e. g. of the cartridge or rod type, with an electrical terminal means intimately attached to each end of the resistor, in combination with a separate metallic supporting terminal structure carried by a terminal panel. Even quite simplified structures of this character often require and employ a relatively large number of component parts and have involved a corresponding number of assembly operations.

It is, accordingly, a principal object of our invention to provide a resistor of the fixed type having a simplified and compact unitary current conducting and supporting terminal structure that is easily manufactured and assembled with the resistor element.

It is a further object of our invention to provide an improved and simplified means for mounting resistors in radio power supply apparatus.

In accordance with our invention a resistor element, of the molded rod type for example, is provided with a pair of unitary metallic end terminals having integral current conducting and attachment members, adapted to be fastened directly to a plain terminal panel free of special mounting means.

More specifically in accordance with our invention, a unitary terminal structure for a resistor element is formed out of sheet or strip of metal, and is provided with a portion for readily attaching the element to a plain mount, such as a punched plate or sheet of insulation, another portion to which conductors may be attached, and another portion, drawn out of the sheet metal for intimately gripping the ends of the resistor element, the first and second named portions being integral with the last named portion.

The novel features that we consider characteristic of our invention are set forth with particularity in the appended claims. The invention itself, however, both as to its organization and its method of operation, together with additional objects and advantages thereof, will best be understood from the following description of specific embodiments when read in connection with the accompanying drawing in which

Figure 1 is a substantially full-sized view, in perspective, of a resistor and terminal panel assembly embodying our invention, one of the elements being shown in position for assembly;

Fig. 2 is an exploded view, in perspective, of a resistor and terminal structure shown in Fig. 1, embodying our invention;

Fig. 3 is a view in side elevation of a resistor, with a portion broken away, and terminal panel in assembled relation, embodying a modified form of our invention;

Fig. 4 is an end view of the modification of Fig. 3, showing two resistors mounted in spaced parallel relation;

Fig. 5 is a full-sized view in side elevation and partly in section, of a resistor and terminal panel in assembled relation, embodying a modified form of our invention, with portions broken away; and

Fig. 6 is an end view of the modification shown in Fig. 5.

Referring now more in detail to our invention as illustrated, and more particularly to Figs. 1 and 2, it comprises a resistor element 5, preferably in the form of a cylindrical rod, of the molded type, and in the present case is composed of a mixture of graphite and "bakelite", a phenol condensation product, although it may be a rod of carbon or any other suitable material. The ends of the rod are, preferably, provided with an intimate coating 7 (Fig. 2) of low resistance metal such as copper, for insuring good contact relation between the resistor rod and terminals hereinafter described.

For the purpose of supporting the resistor element and conducting current thereto, a pair of end terminals 9 are formed from a flat strip of sheet metal, a substantially cylindrical cap portion or sleeve 11 being formed in the strip at right angles to the plane thereof, leaving a rim or flange 13 around the sleeve and an extended and slotted tail section 15 integral with the flange for attachment and for soldering purposes, hereinafter described. The terminal member 9 constitutes in effect, an eyelet with a tail portion, the sleeve portion 11 being adapted to encircle an end of the resistance rod, effecting a large area of contact therewith. The inside diameter of the sleeve 11, particularly the end portion remote from the flange or rim 13, is made slightly less than that of the end 7 of the resistance rod 5 for purposes of effecting a tight press-fit when the terminal is forced onto and assembled with the resistance rod as shown in Fig. 1.

In the assembly operation the terminals 9 are preferably both forced simultaneously onto the ends of the resistor as a single operation by suitable means such as an arbor press that engages the flanges 13 of the terminals. When assembled in this manner the resistor functions as a punch, causing the metal of the sleeve 11 of the terminal to stretch a few thousandths of an inch in diameter, thereby effecting an extremely tight metallic contact with the metallic coating on the resistor.

Referring to Fig. 1, the resistor elements 5, carrying the attached terminal members 9, are mounted in a row on a terminal panel or card 17, of insulating material which, in turn, is fastened

to the chassis of the apparatus wherein the resistors are used. For this purpose the card is provided with a plurality of rows of spaced openings or slots 19 in registering relation with the terminals 9 and through which the tail sections 15 of the terminal members are adapted to extend. A portion of each projecting section is angularly bent with respect to that portion engaging the slot and parallel to the card as shown at 21, in the present embodiment, thereby holding the resistor units at each end, securely in place on the card. External circuit leads (not shown) are adapted to be soldered to the slotted free end portion of the tail section 15. While a card with but two rows of slots and a single row of resistors has been shown, in another structure that we have built according to our invention, more rows of slots were provided for the purpose of mounting a multiplicity of resistor units in more than one row.

Referring to the modification shown in Figs. 3 and 4, a well known type of resistance device, comprising a resistor element 24, encased in a tubular form of insulation material 25, is provided with molded terminal end pieces 29 of low melting point metal. In each of these end pieces is molded a soldering and support lug 31 of strip sheet metal that extends from said end pieces as shown and is thereby united and becomes substantially integral therewith. These lugs are each provided with a deformable tab 33. As above, the resistor units are adapted to be mounted in a row along a terminal panel 37. The latter is provided with a plurality of suitably spaced formations such as slots or notches 39 into which the lugs are adapted to fit when sprung into place. The lugs are further securely retained on the panel by twisting a tab formed integral thereon in a position to engage the panel as indicated at 33. This modified and improved molded construction is particularly adapted to the encased type of resistance element above mentioned. While, of course, it could be used if desired with the composition rod type disclosed in connection with Figs. 1 and 2, we prefer to use the more simplified, unitary sheet metal terminal structure shown in Figs. 1, 2, 5 and 6. The modification shown in Figs. 3 and 4 illustrate another form of terminal or tail member and simplified mounting panel which requires only simple spaced notches along opposite edges to receive the tail portions of the resistor unit.

While the terminal fastening and current conducting functions have been disclosed above as being performed by one elongated tail or terminal portion extending from the flanges 13 in the above described construction, it is within the scope of our invention to provide separate spaced extending portions for the two functions. Accordingly, referring to the modification shown in Figs. 5 and 6, a tail portion in the form of a short tab 41 is provided on a flange 42 below the sleeve 11 while a separate soldering member or lug 43 is formed on another portion, e. g. above the sleeve. If desirable, the soldering member may be formed in any other position around the sleeve. As shown, the tab 41 extends through a slot 19 in the panel, being preferably twisted, as with a quarter turn, for securely fastening the resistor unit to the panel. While the tab may be bent over in a manner similar to that shown in Figs. 1 and 2, it has been found advantageous to twist the tab as disclosed. The twisting is more easily accomplished and it produces a self tightening action as will readily be obvious. Furthermore, it renders it easier to service the assembly, making it possible to readily detach a resistor unit by a simple turn with a pair of pliers. With the above described embodiment, external conductors (not shown) may conveniently be extended to the panel and soldered to the terminal lugs 43 on the same side as the resistor units which are, in this construction, exposed on the panel along the face thereof that points away from the chassis mounting.

As will be readily apparent, we have provided a simplified and improved terminal structure for a resistor element, that makes possible a low priced terminal for a resistor element, making for easy and quick assembly with excellent contact relation between the terminal and the resistor element. In addition, we have provided an improved terminal assembly for mounting the resistor elements on a panel or card and for affixing circuit leads thereto. A minimum of parts, each of which is greatly simplified, has been made possible by our invention. As will be seen for example, but three parts are used, namely, the resistor element, the unitary terminal and the card. No separate terminal mount on the card or panel is necessary, and similarly several operations, such as riveting, soldering, etc. have been dispensed with. While our novel terminal structure has particular utility in connection with the molded rod type of resistor, it has advantages when employed with a wire-wound resistor, e. g. of the type consisting of a resistance wire wound helically along a rod of insulation material.

Although we have shown and described certain embodiments of our invention, we are fully aware that many modifications thereof are possible. Our invention, therefore, is not to be restricted except insofar as is necessitated by the prior art and by the spirit of the appended claims.

We claim as our invention:

1. An electrical resistance device, including in combination, a rod of resistance material, and end terminal means for said rod including an elongated sheet metal strip, said strip providing a flange about and having integral therewith a substantially cylindrical sleeve extending perpendicularly to the plane of said strip substantially centrally from one face thereof and adapted to encircle said rod with a press fit.

2. A device as defined in claim 1, further characterized in that a portion of the strip exclusive of the sleeve is adapted to provide a soldering terminal.

3. An electrical resistance device as set forth in claim 1, characterized in that a portion of the strip is provided with a deformable mounting means for the resistance rod.

4. Electrical terminal structure for a resistor element, comprising an elongated sheet metal strip, one end of said strip being adapted to have electrical conductors affixed thereto, the other end of said strip being adapted for attachment to an insulating mount, and an intermediate portion of said strip providing a flange about and having integral therewith a substantially cylindrical open ended sleeve extending perpendicularly to the plane of said strip substantially centrally from one face thereof for attachment to a resistor element.

FREDERICK L. CREAGER.
WALLACE W. DEWHURST.