F. RITCHIE.

PRINTING TELEGRAPH.

APPLICATION FILED AUG. 6, 1918.

1,400,988. Patented Dec. 20, 1921.

3 SHEETS—SHEET 1.

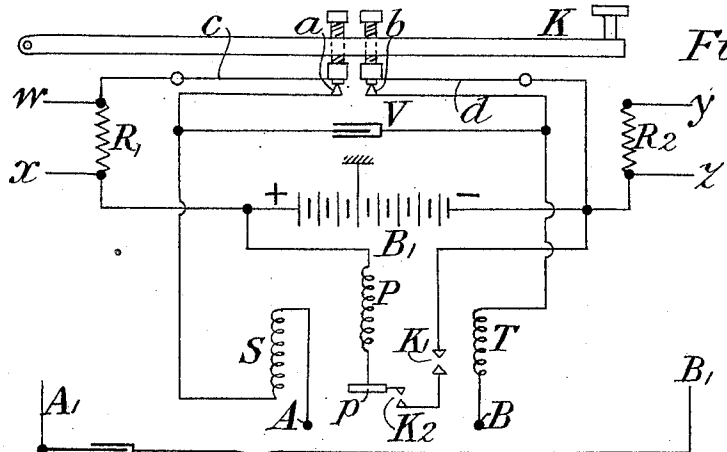

Fig. 1.

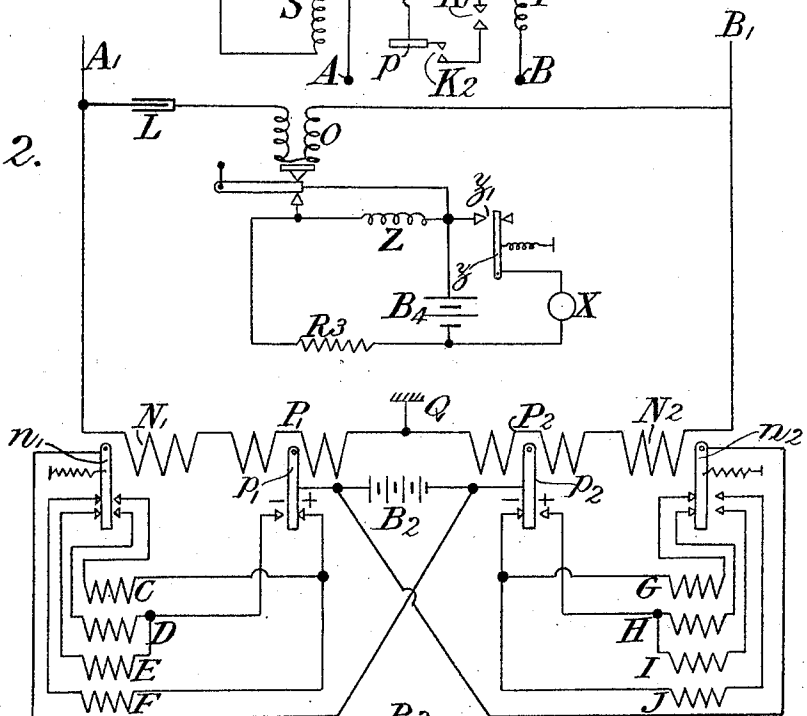

Fig. 2.

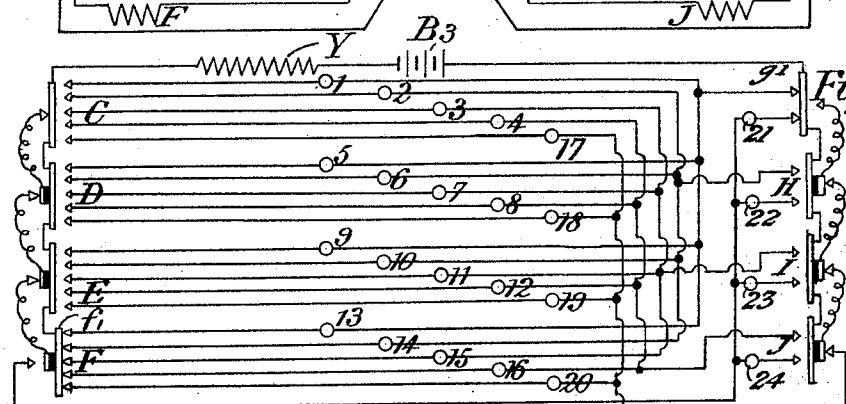

Fig. 3.

Witnesses:
Norris L. Sumley.
[illegible]

Inventor
Foster Ritchie
by James L. Orme
Attorney

F. RITCHIE.

PRINTING TELEGRAPH.

APPLICATION FILED AUG. 6, 1918.

1,400,988.

Patented Dec. 20, 1921.

3 SHEETS—SHEET 2.

Fig. 4.

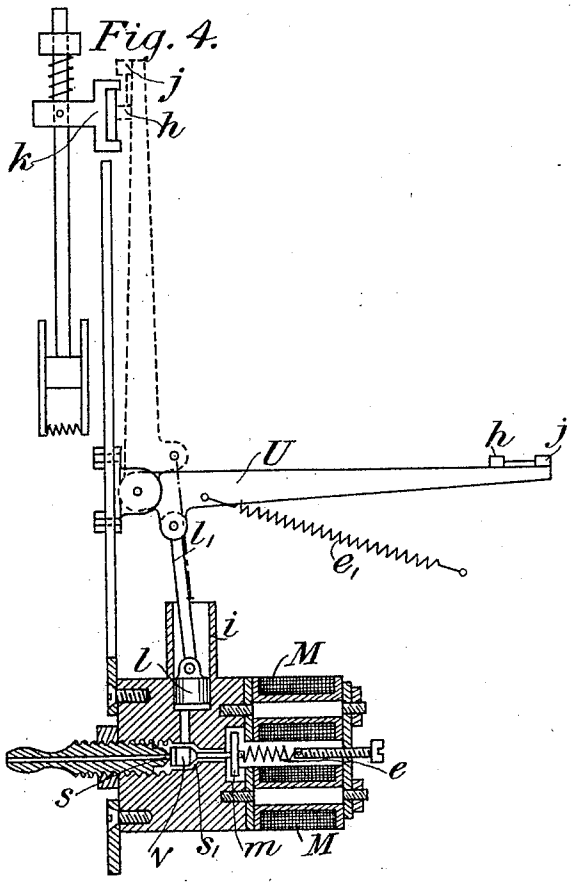

Inventor
Foster Ritchie

Witnesses:
Norris L. Sumley.
[illegible]

by James L. Norris
Attorney

F. RITCHIE.

PRINTING TELEGRAPH.

APPLICATION FILED AUG. 6, 1918.

1,400,988. Patented Dec. 20, 1921.

3 SHEETS—SHEET 3.

Fig. 5.

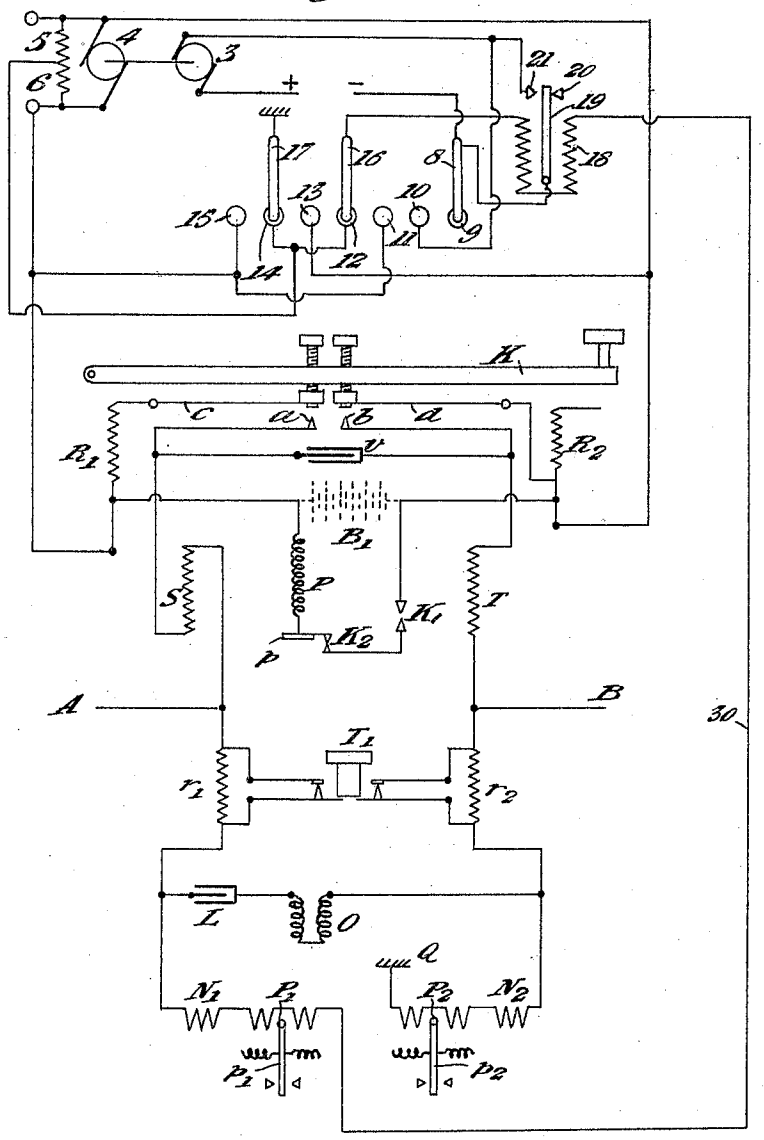

Witnesses:

C. E. Keller

C. R. Culligan

Inventor

Foster Ritchie

by James L. Norris

Attorney

UNITED STATES PATENT OFFICE.

FOSTER RITCHIE, OF EALING, ENGLAND.

PRINTING-TELEGRAPH.

1,400,988. Specification of Letters Patent. Patented Dec. 20, 1921.

Application filed August 6, 1918. Serial No. 248,617.

To all whom it may concern:

Be it known that I, FOSTER RITCHIE, a subject of the King of Great Britain, residing in Ealing, England, have invented a certain new and useful Improved Printing-Telegraph, of which the following is a specification.

The invention relates to an improved printing telegraph, adapted for use over a two-wire telegraph or telephone line. According to the invention, at the receiving station the line is earthed and on each side of the earthed connection are arranged a polarized and a non-polarized relay. The line is thereby divided into two independent circuits and the selection of the required character is determined by the currents transmitted simultaneously from the sending station over the two wires of the line and operating the appropriate relays on either side of the earthed connection.

From the sending station, by the actuation of suitable keys, direct currents of which the strength and polarity are varied according to the signals to be transmitted are simultaneously and independently sent over each wire of the line. For example, over one section there may be a weak negative current and over the other section at the same time a strong positive current.

The relays on either side of the earthed connection are energized according to the currents received in their respective wires and control the circuits of relays disposed in two local circuits, corresponding respectively to the two wires of the line. The relays in the local circuits control contacts in the circuits of electro-magnets for actuating the type levers.

If there are four relays in each local circuit, any one of 24 electro-magnets can be energized by the different combinations formed.

Also, according to the invention, each type lever is provided with two type characters, either of which can, when the arm is actuated, record an impression according to the position of the paper on which the impressions are recorded. The position of the paper carrier is determined by a "shift" electro-magnet energized by an alternating or intermittent current transmitted from the sending station and superimposed on the direct currents sent over the line. The alternating or intermittent currents are received by a condenser in series with a relay bridging the line terminals at the receiving station.

Alternatively, one or both sets of polarized or non-polarized relays may be bridged by a polarized relay in series with a non-inductive resistance, so adjusted that the relay will not respond to the signals normally transmitted over the line, but will be operated by a current or currents, preferably induced, of higher voltage; the polarized and non-polarized relays actuated by the normal signals will not be affected by these currents, either because of their greater inductance, or because they are constructed as comparatively slow acting relays which do not respond to the short duration of the paper shifting impulses.

The operation of each type lever is controlled by a valve which admits air to and exhausts it from a cylinder containing a piston connected to the lever. The position of the valve depends upon whether the electro-magnet associated with the particular type lever is, or is not, energized.

In the system according to the invention, the great advantage is gained that no successive impulses and no synchronizing apparatus are required; each signal sent from the transmitting station effects a combination of energized relays which causes the instantaneous impression of the desired character and enables great speed of working to be attained. The accompanying drawings illustrate diagrammatically an example of a printing telegraph according to the invention. Figure 1 represents the circuits at the transmitting station, Fig. 2 shows the line wire and local relay circuits at the receiving station, Fig. 3 shows the connection between the local relay circuits and the electro-magnets for actuating the type levers; Fig. 4 represents an example of the means for operating these levers pneumatically; Fig. 5 shows in diagram the general arrangement of the circuits at either station.

Referring to Fig. 1, A, B, are the terminals of the line wires. K is one of the 24 keys which when depressed closes its contacts a, b and transmits to the line wires connected to A and B respectively currents from a source of electricity which is shown as a battery B_1 but which may be a motor generator, the strength and polarity of the currents being determined by the connections of the springs c and d with the conductors w, x and y, z. In the position shown,

the key K when depressed will cause a strong negative current to flow over the line connected to the terminal B and a weak positive current to flow over the line connected to the terminal A. The strength of the current is determined by the insertion or omission of the resistance R_1, R_2 from their respective circuits. The line wires are connected at the receiving station to terminal A_1, B_1 bridged by polarized relays P_1, P_2 and by non-polarized relays N_1, N_2 connected as shown. The line is earthed at Q. Relays C, D, E, F are included in a local circuit controlled by the relays P_1 and N_1 and relays G, H, I, J, are included in a local circuit controlled by the relays P_2 and N_2; the battery B_2 forms a source of energy for both local circuits. The armatures p_1, p_2, take up mid positions, as shown in Fig. 5, when the relays P_1, and P_2 are not energized.

With the connections assumed in Fig. 1, the armatures n_1, p_1, n_2, p_2 will rest against their respective contacts as shown in Fig. 2. Relays F and G will be energized and the electro-magnet 13 will also be energized in a circuit from B_3, contact f_1, electro-magnet 13, closed contact g_1 to B_3. If F and H were energized, electro-magnet 14 would be energized; F and I energized would energize electro-magnet 15; F and J energized would energize 16. The number of electro-magnets that can be energized when either of the relays C, D, E, F is separately energized and a relay of the set G, H, I, J, is also energized at the same time is consequently 16. If F were energized but no relay of the other local circuit, electro-magnet 20 would be energized; if none of the relays C, D, E, F are energized, one of the electro-magnets 21, 22, 23, 24 is energized. If the corresponding relay of the set G, H, I, J is energized, and if none of the relays G, H, I, J are energized one of the electro-magnets 17, 18, 19, 20 is energized, if the corresponding relay of the set C, D, E, F is energized. The total number of different electro-magnets that can be energized with this combination of relays is consequently 24.

It will be seen from Fig. 4, that each type lever U carries in known manner two type characters h and j. To print the character j at the end of the lever it is necessary that the paper carrier k should be raised so as to bring the paper k_1 opposite j and clear of h when the type lever has been brought into the operative position shown by the dotted lines.

The "shift" of the paper referred to above is effected through an electro-magnet which is energized by an alternating or intermittent current transmitted from the sending station and superimposed upon the direct currents sent over the line.

A device for this purpose is shown in Fig. 1, in which a primary coil P is energized from the battery B_1 when the key K_1 is closed, and in well known manner by the attraction of its armature p periodically interrupts the circuit at K_2 and thereby causes alternating currents to be set up in the secondary coils S and T which are connected in series to the terminals A and B over a condenser V.

The alternating currents at the receiving station traverse a condenser L and relay O bridging in series the line betweeen the terminals A_1, B_1; the inductance of the relays N_1, N_2, P_1, P_2 prevents any appreciable portion of the alternating currents from passing to earth at Q. The armature o of relay O normally rests against its back contact and thereby short circuits a relay Z. When relay O is energized, the short circuit is removed, relay Z is energized by a battery B_4 over a resistance R_3 and by attracting its armature z so as to close the front contact z energizes an electro-magnet X which effects the paper shift.

The electro-magnets effect the lifting of the type levers through the medium of a pneumatic device. In Fig. 4 M represents one of the magnets 1 to 24; when the magnet M is energized, its armature m is attracted and by moving a valve v to the right against a seat s_1 allows compressed air to enter a cylinder i through a seat s against which the valve is normally pressed in contact by a spring e. The compressed air drives a piston l and type lever U to which it is pivoted by the rod l_1 to the printing position shown by the dotted lines.

When the magnet M is deënergized the valve v is restored to the seat s and an exhaust path is formed for the air in the cylinder i past the seat s_1. A spring e_1 returns the type lever to the normal position.

In a similar way the paper carrier k is raised by a piston l_2 operated by an electro-magnet X included in the circuit of the relay Z (Fig. 2). The pneumatic device for operating the lever is not broadly new and is not claimed herein.

As the signals transmitted must be recorded at the transmitting as well as at the receiving station, apparatus similar to that shown in Fig. 2 is connected for this purpose to the terminals A and B in shunt with the lines to the receiving station or stations. Resistances R_1, R_2 as shown in Fig. 5 are inserted between the transmitting and recording apparatus corresponding to the line resistance, these resistances being cut out when signals are being received, a key T_1 mechanically connected to all the transmitting keys being provided to insert these resistances when required.

The inking of the type is effected by a ribbon in the manner usual with typewriting machines.

The paper feed is effected by a pneumatic

device of the kind described and is connected as shown at Y (Fig. 3).

To bring this into action without printing which is required when spacing, one of the numbers 1 to 24 is represented by a resistance, so that in the example shown there are 23 type levers, enabling 46 characters to be impressed.

Having thus described the nature of the said invention and the best means I know of carrying the same into practical effect, I claim:—

1. A printing telegraph in which the impression of a character may be effected by the actuation of a single key at the transmitting station and in which direct currents of different polarity and strength are transmitted and received independently and simultaneously over the leads of a two wire line, a polarized and a neutral relay inserted in each of the said leads at the receiving station and means by which an alternating current may be superimposed on the direct current traversing each lead.

2. In a printing telegraph a receiving instrument comprising a two lead wire connected with the transmitting station, a polarized and a neutral relay in each lead, a local source of current, four local relays associated with each lead, means whereby not more than one of the said four local relays associated with the same lead is energized at any time, and connections whereby the relays associated with one lead are energized in parallel in pairs with the relays associated with the other lead.

3. A printing telegraph in which direct currents of different polarity and strength are transmitted and received independently and simultaneously over the leads of a two wire line, a polarized and a neutral relay being inserted in each of the said leads at the receiving station, a transformer comprising primary and secondary coils, a key at the transmitting station, means by which the actuation of said key causes the primary coil to be intermittently energized and to induce alternating currents in the secondary coil which are conveyed over each lead of the line, a paper carrier at the receiving station and means by which said alternating currents shift the position of said paper carrier.

4. A printing telegraph in which direct currents of different polarity and strength are transmitted and received independently and simultaneously over the leads of a two wire line, a polarized and a neutral relay being inserted in each of the said leads at the receiving station, a transformer comprising primary and secondary coils, a key at the transmitting station and means by which the actuation of said key causes the primary coil to be intermittently energized and to induce alternating currents in the secondary coils which are conveyed over each lead of the line, a relay bridging the line wires at the receiving station and energized by said alternating currents, a local circuit at said receiving station, an electro-magnet in said local circuit energized when said relay is energized, a paper carrier and means operated by said electromagnet for shifting said paper carrier.

5. A printing telegraph station and transmitter thereat, comprising in combination keys corresponding to the characters to be transmitted, a two wire lead from the station, a resistance in each line wire, keys for short circuiting said resistances, a source of direct current for transmitting currents of varying strength over each line wire, a primary coil and means for intermittently energizing said coil from said source, secondary coils energized from said primary coil transmitting alternating currents over said two wire lead, a paper carrier at the receiving station and means by which said alternating currents shift the position of said paper carrier.

6. A printing telegraph station and receiver thereat comprising in combination a two wire lead, a polarized and a neutral relay in each lead energized by direct currents, a relay bridging the said line wires in series with a condenser and energized by alternating currents superimposed on said direct currents, a local circuit, means by which the local circuit is closed when said relay is energized, an electro-magnet energized in said local circuit, type levers each carrying two sets of type characters, and a paper carrier shifted by said electromagnet so as to bring the paper opposite the required set of characters.

In testimony whereof I have signed my name to this specification.

FOSTER RITCHIE.