Oct. 17, 1944. G. F. LARTZ 2,360,693

PHOTOGRAPH MOUNTING CORNER

Filed Oct. 13, 1941

Fig. 1

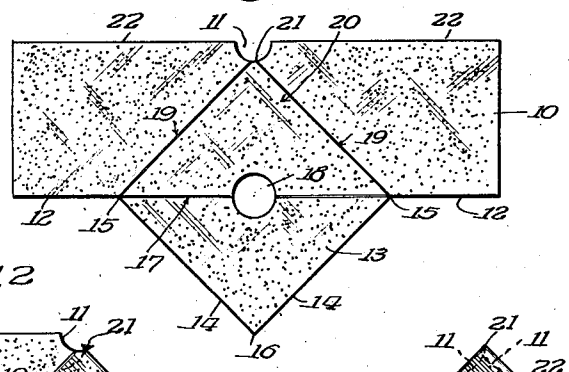

Fig. 2

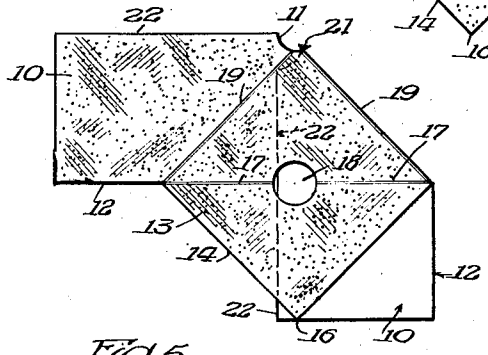

Fig. 3

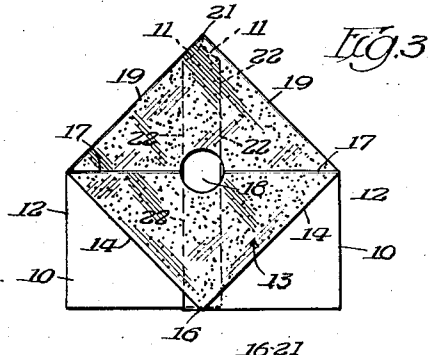

Fig. 5

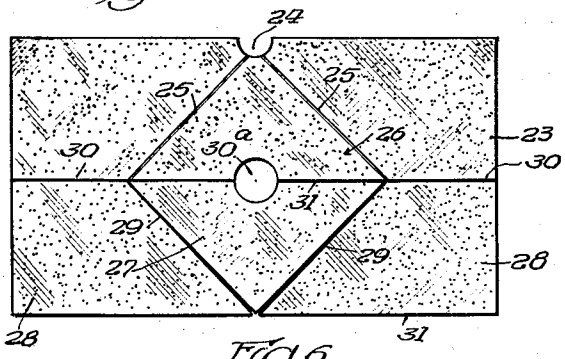

Fig. 4

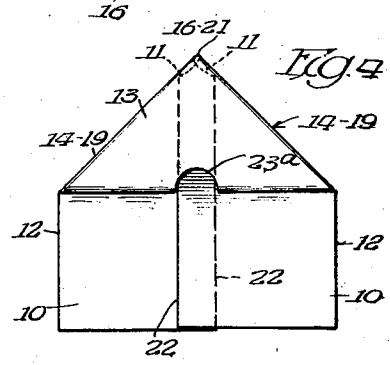

Fig. 6

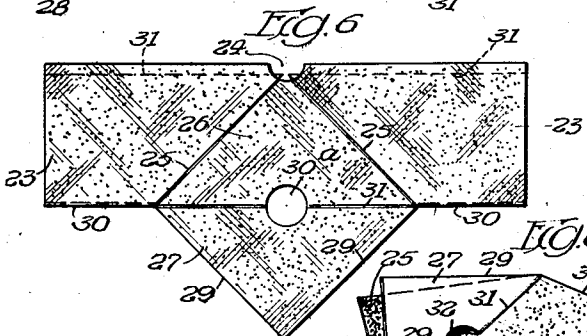

Fig. 7

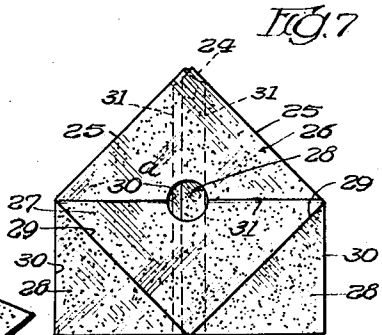

Fig. 8

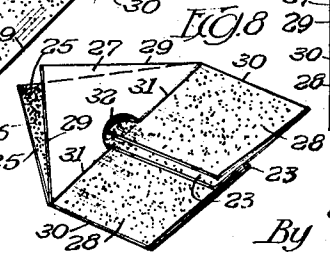

Inventor
George F. Lartz
By [signature] Atty.

Patented Oct. 17, 1944

2,360,693

UNITED STATES PATENT OFFICE

2,360,693

PHOTOGRAPH MOUNTING CORNER

George F. Lartz, Suring, Wis.

Application October 13, 1941, Serial No. 414,823

3 Claims. (Cl. 40—158)

This invention relates to improvements in mounting devices for cards, photographs, pictures, and the like, and one of the objects of the same is to produce a simple corner or pocket into which the corner of the card is inserted, and by means of which the card may be secured to a mounting surface, either removably or permanently.

A further object is to provide an improved device of this character, formed of a single piece of any suitable material, preferably gummed on one surface and adapted to be folded to form a pocket, and the portion forming the front wall of the pocket may be of any desired configuration, and either plain, embossed, or suitably ornamented to add to the artistic effect of the mounting.

A further object is to provide an improved device of this character, in which the front wall of the pocket will be reinforced to protect the same from becoming torn by the insertion of the corner of the card or photograph thereinto.

To the attainment of these ends and the accomplishment of other new and useful objects as will appear, the invention consists in the features of novelty in substantially the construction, combination and arrangement of the several parts hereinafter more fully described and claimed, and shown in the accompanying drawing illustrating this invention, in which

Figure 1 is a plan view of a blank for producing one form of the invention.

Figure 2 is a view showing the blank partially folded.

Figure 3 is a view of the blank folded to a greater extent than in Figure 2.

Figure 4 is a view of the blank completely folded, and forming the pocket or corner.

Figure 5 is a plan view of a modified form of blank.

Figure 6 is a view of the blank shown in Figure 5, partially folded.

Figure 7 is a view of the blank shown in Figure 5, folded to a further extent.

Figure 8 is a perspective view of the pocket or mounting produced from the blank shown in Figure 5, but with the parts unsealed with respect to each other.

Each of the forms of blank may be formed of any suitable material, and in the forms shown in Figures 1 to 4, the blank comprises a body portion 10 which is comparatively long with respect to its width, and one edge of the blank intermediate the extremities, preferably substantially at the longitudinal center, is cut away as at 11, to form an open recess.

Extending from the opposite side 12 of the body 10 is a flap 13 which is preferably triangular in configuration, the sides 14 of the flap converging from the points 15, adjacent the edge 12 of the blank, to the apex 16. This apex 16 is preferably in alinement with substantially the central point of the bottom of the cut-out portion 11.

The flap 13 is adapted to be folded upon the line 17, which latter coincides with the edge 12 of the blank, and the blank is provided with an aperture 18 therethrough, which intersects the fold line 17. This aperture is preferably in alinement with the apex 16 of the flap and the cut-out portion 11 in the edge of the blank.

One face of the blank, including the flap 13, is preferably coated with an adhesive, such as gum, or the like, and the blank 10 is weakened along the lines 19, and folded upon itself in directions away from the gummed surface, so that the folded portions will form the back wall of a pocket. The portion 20 of the blank intermediate the lines 19 will constitute the front wall of the pocket, and the weakened portions of the lines 19 converge from the points 15 at the base of the flap 13, to the point 21 at the bottom of the cut-out portion 11, thereby forming a substantially triangular portion 20 which conforms in shape and contour to the flap 13.

When the folded portions of the blank are disposed against the back of the portion 20, the edges 22 will slightly overlap, as shown more clearly in Figure 3, and, if desired, these overlapping edges may be secured together by moistening the adjacent adhesive surfaces.

The flap 13 is folded in the opposite direction to that in which the end portions of the body 10 are folded, so that the flap and end portions in their folded positions will be adjacent opposite faces of the body. The flap may be folded upon the line 17 against the face of the portion 20 of the blank, either before or after the ends of the blank are folded along the lines 19, and when the flap 13 is thus folded, its adhesive surface will be moved into contact with the adhesive face of the portion 20, and the two may be sealed together by moistening the adhesive surface.

When the flap 13 is thus folded, the aperture 18 which intersects the fold line 17, will form an open recess 23a, as shown more clearly in Figure 4, so as not only to serve as a means for assisting in guiding the corner of a card into the pocket, but also to serve as a means of ornamentation.

The flap 13, being folded against the portion 20, serves to re-inforce the front wall of the pocket.

When the pocket is thus formed, the gummed surface of the folded portions of the blank will be exposed, and serves as a means whereby the pocket or corner may be secured to a mounting surface, and in this form of the invention the adjacent faces of both of the walls of the pocket will be free from adhesive material.

The apex of the portion 20 of the blank, as well as the apex 16 of the flap, when the pocket

is formed, are coincident with the point 21 of the cut-away portion 11.

In the form of the invention shown in Figures 5 to 8, the blank consists of a body portion 23 which is also comparatively long with respect to its width, and is provided with a cut-out portion 24 along one edge, with fold lines 25 similar to the lines 19, upon which the ends of the body of the blank are folded to produce the central portion 26.

In this form of the invention, the blank is provided with a flap 27 corresponding to the flap 13, and is also provided with a supplemental portion 28 which is cut along the lines 29, which converge from the fold line 30 to the edge 31 of the portion 28, so as to form two supplemental flaps one on each side of the portion 27.

The entire face of the blank, and the portions 27 and 28, are preferably coated with an adhesive substance, such as gum or the like, and the portions 28 of the blank are folded along the line 30 against the back of the portion 23, and the edge of the portions 28 formed by the cut or lines 29 coincide with the respective fold or weakened lines 25 of the portion 23, as shown more clearly in Figure 6. If desired, the portion 28 may be of a slightly less width than the portion 23.

When the blank is thus partially folded, the portion 23 is then folded along the lines 25 in the direction away from the gummed surface, and as the gummed surface of the portions 28 will be exposed, they will overlap, the portions 28 and 23 forming the back wall of the pocket, which wall is provided on both of its surfaces with an adhesive, so that the pocket may be secured to a mounting, and the end of the card which is inserted into the pocket may also be secured to the pocket.

The flap 27 may be folded against the portion 26 either before or after the blank has been shaped into a pocket, and as the gummed surfaces of the flap 27 and the portion 26 will be disposed adjacent each other, they may be sealed together by moistening the gummed surfaces.

The opening 30a in the blank intersects the fold line 31 of the flap 27, to form an open recess 32, as shown more clearly in Figure 8.

With this form of the invention it will be manifest that the front wall of the pocket will not only be re-inforced, but the pocket may be secured to a mounting surface, and the corner of the card which is inserted into the pocket may be permanently secured to the pocket by moistening the adjacent adhesive surfaces, or removably held by the pocket by allowing the gummed surfaces to remain dry.

While the preferred forms of the invention have been herein shown and described, it is to be understood that various changes may be made in the details of construction and in the combination and arrangement of the several parts, within the scope of the claims, without departing from the spirit of this invention.

What is claimed as new is:

1. A mounting device of the character described, comprising a body formed from a single piece of material comparatively long with respect to its width, substantially one entire face of said body being gummed, said body having a cut-out portion in one edge spaced from each end thereof, a flap extending from the opposite edge of said body, the central point in the free end of said flap being substantially in alinement with said cut-out portion, whereby when said flap is folded upon said body along a line coinciding with the adjacent edge of the body, the gummed faces of the blank will be brought into contact and the said central point of the flap will register with said cut-out portion, said body on each side of said flap being folded upon itself to form an angular-shaped portion between and defined by the last said folds, the portion of the body between the last said folds forming the front wall of a pocket, the apex of which front wall is coincident with said cut-out portion, the said flap constituting a reinforcement for the front wall of said pocket and serving to cover the outer gummed face thereof, and supplemental flaps extending beyond the same edge of the body from which the first said flap projects, and with the first said flap therebetween, the proximate edges of the supplemental flaps being separated from each other and from the said flap, said supplemental flaps being connected to and foldable against the ungummed face of said body independently of the first said flap, and on lines coinciding with the line of fold of the first said flap, portions of the gummed surfaces of said supplemental flaps constituting one wall of the pocket.

2. A blank for a mounting corner pocket, comprising a body comparatively long with respect to its width, substantially one entire face of the body being gummed, said blank having a longitudinal medial folding line, one edge of the blank being cut away at a point intermediate and spaced from the extremities of the blank, the portion of the blank on one side of said medial line being foldable on lines diverging from the bottom of said cut-away portion to and terminating at said medial line, the portion of said blank on the other side of said medial line being cut on lines converging from the said fold line to the opposite edge of the body, to form a separate intermediate flap and two supplemental end flaps, said intermediate flap being foldable against said body on said medial line independently with respect to said supplemental end flaps to provide an outer gummed surface to mount said pocket and an inner gummed surface to which the inserted card may be secured.

3. A blank for a mounting corner pocket, comprising a body comparatively long with respect to its width, said blank being provided with a longitudinal medial folding line, one edge of the blank being cut away at a point intermediate and spaced from the extremities of the blank, the portion of the blank on one side of said medial line having folded lines diverging from the bottom of said cut-away portion towards and terminating at said medial line, the portion of said blank on the other side of said medial line being severed on lines converging from the medial folding line to the opposite edge of the body, to form a separate intermediate flap and two supplemental flaps, said intermediate flap being foldable against said body on said medial line independently with respect to and to cover a portion of said supplemental flaps, there being an aperture in said body intersecting the folding line of the intermediate flap and spaced from the extremities of the latter, said blank when folded presenting gummed surfaces to an inserted card and to a supporting surface, whereby the corner may be adhesively secured to both.

GEORGE F. LARTZ.