Dec. 30, 1958 L. F. ZACKER 2,866,589

TEAR STRIP FOR ENVELOPES AND OTHER CONTAINERS

Filed Dec. 17, 1956

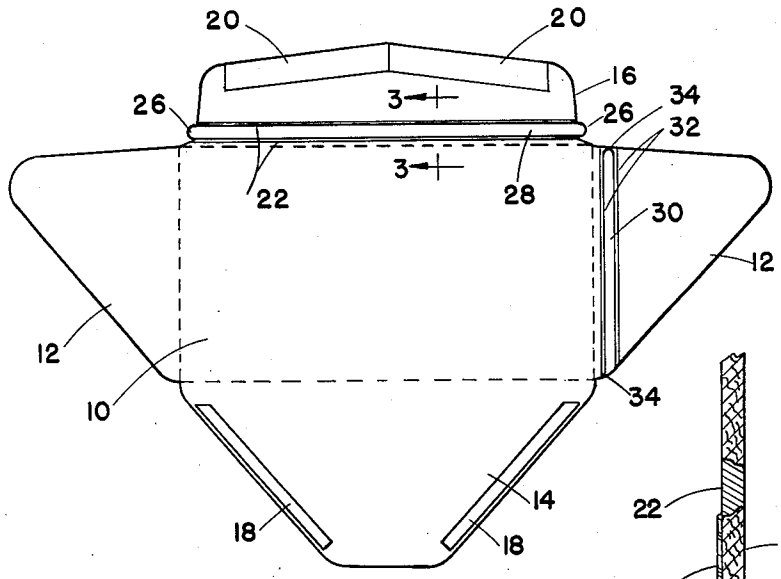

FIG. 1

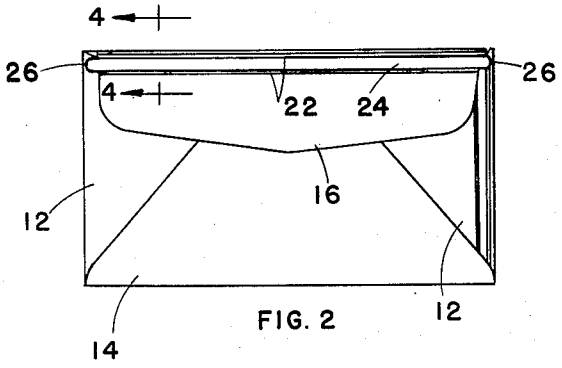

FIG. 2

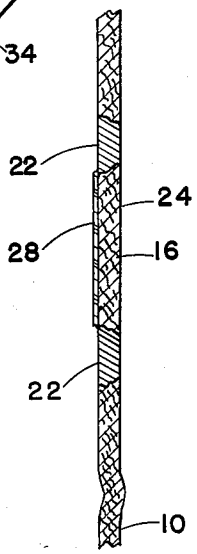

FIG. 3

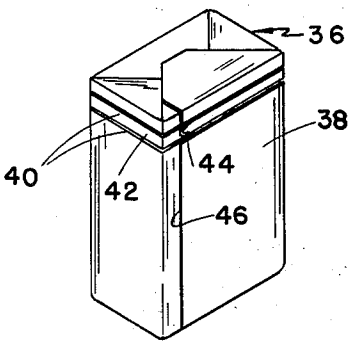

FIG. 5

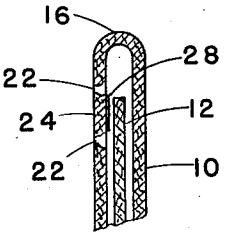

FIG. 4

LAWRENCE F. ZACKER
INVENTOR.

BY Knox & Knox

United States Patent Office 2,866,589 Patented Dec. 30, 1958

2,866,589

TEAR STRIP FOR ENVELOPES AND OTHER CONTAINERS

Lawrence F. Zacker, San Diego, Calif.

Application December 17, 1956, Serial No. 628,872

3 Claims. (Cl. 229—51)

This invention relates generally to containers having means for making the same easily openable, and more particularly to a tear-strip construction for envelopes and other paper containers.

The primary object of this invention is to provide means for making a container easily opened by the breaking or parting of a paper panel constituting a portion of the container, the invention being particularly concerned with the provision of such an openable panel with optimum economy of manufacturing time and materials.

Another object of this invention, ancillary to the preceding object, is to provide a tear-strip consrtuction which is adapted to be incorporated in envelopes and other paper containers without necessitating any radical changes in the accepted processes for manufacture of such containers.

Still another object of this invention is to provide a tear-strip construction which can be incorporated in envelopes and other containers by envelope and container manufacturing machines operating at high speeds. More specifically, it is an object of this invention to provide tear-strip structure for containers which enables the application of the plastic material in liquid form, and the weakening of the paper at the edges of this strip by the application of another liquid substance thereto.

Still another object of this invention is to provide novel means for weakening the paper at the edges of the tear-strip, this novel means consisting in the application of a substance which will cause rapid deterioration of the fiber content in the paper, the chemical deterioration being localized to very narrow lines and being controllable to a degree at least equivalent to the control of the weakening usually accomplished by mechanical means such as perforation and crimping or scoring, while being considerably more acceptable than the result of any such prior art perforation, crimping or scoring. Possibly the strongest reason for the general acceptability of this tear-strip construction is the fact that, although the paper is suitably weakened in localized portions extending along the edges of the tear-strip, the envelope or container still is in completely sealed condition until this seal is intentionally broken.

With these objects definitely in view, along with other objects which will appear hereinafter as this description proceeds, this invention resides in the novel construction, combination and arrangement of elements and portions as will be hereinafter described in detail in the specification, particularly pointed out in the appended claims, and illustrated in the accompanying drawings, in which:

Figure 1 is a plan view of a blank used for the construction of an envelope incorporating my invention;

Figure 2 is a rear elevational view of an envelope with the sealing flap in closed position, the envelope illustrating my invention as incorporated therein;

Figure 3 is a greatly enlarged fragmentary vertical sectional view, taken on the line 3—3 in Figure 1;

Figure 4 is an enlarged, fragmentary, vertical sectional view, taken on the line 4—4 in Figure 2;

Figure 5 is an isometric view of a cigarette package wherein my invention is incorporated.

Similar characters of reference designate similar or identical elements and portions throughout the specification and throughout the different views in the drawing.

Referring now to the drawing in detail, it should first be pointed out that this invention is not limited to use in envelopes, and that the term "panel" is used in this disclosure in its broadest sense. Such a panel will, however, ordinarily be constructed of paper, but the container may be of various types and forms, with the said panel ordinarily constituting an outside or superficial portion of the container. In the envelope illustrated, there is provided a substantially conventional envelope blank comprising a central panel **10**, a pair of similar side flaps **12**, a rear flap **14**, and a sealing flap **16**. Only the sealing flaps **16** and one of the side flaps **12** is shown as altered by this invention, although it will be understood that tear-strips can be incorporated with any or all of the flaps and may even be incorporated with more than one flap in a single envelope blank. Gummed interior surfaces **18** are provided on the rear flap **14**.

The sealing flap **16** is provided with gummed interior surfaces **20** and is used in a substantially conventional manner. Portions **22** of the sealing flap **16** are impregnated with a substance causing deterioration of the fiber content of the paper at a faster rate than the remaining parts of the corresponding paper panel which may be considered that portion of the sealing flap **16** adjacent to the central panel **10** of the envelope. As illustrated, the portions **22** are elongated and parallel and spaced apart to define therebetween a tear-strip **24**. This tear-strip preferably extends beyond the adjacent edge portions of the paper panel concerned, in this case the sealing flap **16**, to constitute pull tabs **26**. As illustrated in Figure 1, two pull tabs **26** are provided, one at each end of the sealing flap **16**. The chemical substance used to make the paper deteriorate, as stated, is brushed, rolled or sprayed onto the panel, and the character of this substance will be further disclosed hereinafter. To improve the tensile strength of the tear-strip **24**, I apply a thin layer **28** of tough material such as the plastics now used in the tear-strip art, although it is a feature of this invention that this layer **28** of tough material can be quite thin, when used in conjunction with the chemically weakened portions **22**, and it is a feature of this invention that by virtue of this relative thinness the plastic can be applied in liquid form, preferably by spraying, but also conceivably by such processes as brushing or rolling the liquid plastic onto the tear-strip.

A tear-strip **30** may be provided in the side flap **12** or in the rear flap **14** alternatively or additively to the provision of the tear-strip **24** in the sealing flap **16**. In the drawing, only one such other positioning of the tear-strip is indicated, as at **30** in Figure 1, and it will be noted that elongated parallel portions **32**, impregnated with a material causing deterioration of the fiber content of the paper extend along the sides of the tear-strip **30** and a pair of pull tabs **34** will be provided in this tear-strip, all according to the same principles of construction as already detailed above.

Examples of substances used to cause deterioration of the fiber contact in the paper are:

10–5% sodium hydroxide in water;
Approximately 1% sodium hydroxide in alcohol;
Approximately 1% sodium hydroxide in glycerine;
5–16% sodium hypochlorite (water);
2–20% chromic acid in water;
5–10% nitric acid in water;
5–10% nitric acid in alcohol.

All these substances are in liquid form and preferably

sprayed in parallel lines to result in the weakened portions 22 and/or 32, although other means of application may be used. In machines having conventional apparatus for heat drying the gummed surfaces 18—20, a simple adaptation of the machines will permit the heat drying of the portion 22 and 32 wetted by the deteriorating chemical used. In this connection, it is noteworthy that where heat is employed, several other substances can be used, including 5–10% sulphuric acid in alcohol or water, it being understood that where necessary the deteriorating chemical substance must be chosen with a view to avoiding discoloration of the paper, it being urged that the choice of the substance is a technological matter and something which those skilled in the art to which this invention appertains can easily accomplish in carrying out this invention.

Minor variation from the form of the invention described herein may be resorted to without departure from the spirit and scope of this invention and the foregoing is represented as illustrative rather than limiting. For example, the panel, while usually constructed of paper, may be of other materials used for wrappings and containers and in this event the substance causing localized deterioration will be chosen to suit the chemical composition of the material of the panel. When the invention is applied to a container such as the cigarette package indicated at 36, the panel concerned may be considered that portion of the wrapper, generally cellophane or the like, on the sides of the cigarette package. In this embodiment of the invention, elongated parallel portions 40 are impregnated with a chemical substance causing deterioration of the strength of the material therein, and these portions define an elongated tear-strip 42 which terminates in a pull tab 44 extending slightly beyond the adjacent edge portions of the panel 38, the edge of the panel concerned being indicated at 46.

I claim:

1. In a container: a paper panel; elongated portions of said panel having therein a substance causing chemical deterioration of the fiber content of the paper in said portions at a rate greatly in excess of the rate of deterioration in the remainder of the panel; said portions constituting means to facilitate the opening of the container by parting the panel longitudinally of said portions; said portions being spaced apart and parallel and defining a tear strip in said panel.

2. In a container: a paper panel; elongated portions of said panel having therein a substance causing chemical deterioration of the fiber content of the paper in said portions at a rate greatly in excess of the rate of deterioration in the remainder of the panel; said portions constituting means to facilitate the opening of the container by parting the panel longitudinally of said portions; said portions being spaced apart and parallel and defining a tear strip in said panel; and said tear strip being extended beyond adjacent edge portions of the panel to constitute a pull tab.

3. In a container: a paper panel; elongated portions of said panel having therein a substance causing chemical deterioration of the fiber content of the paper in said portions at a rate greatly in excess of the rate of deterioration in the remainder of the panel; said portions constituting means to facilitate the opening of the container by parting the panel longitudinally of said portions; said portions being spaced apart and parallel and defining a tear strip in said panel; and a thin layer of tough material secured on said tear strip.

References Cited in the file of this patent

UNITED STATES PATENTS

2,097,505	Arp et al.	Nov. 2, 1937
2,310,371	Lines et al.	Feb. 9, 1943
2,315,116	Flizikowski	Mar. 30, 1943
2,533,255	Will	Dec. 12, 1950
2,801,745	Piester	Aug. 6, 1957