March 5, 1957 G. K. SHERMAN 2,783,821

CHAIR BACK

Filed May 18, 1953 2 Sheets-Sheet 1

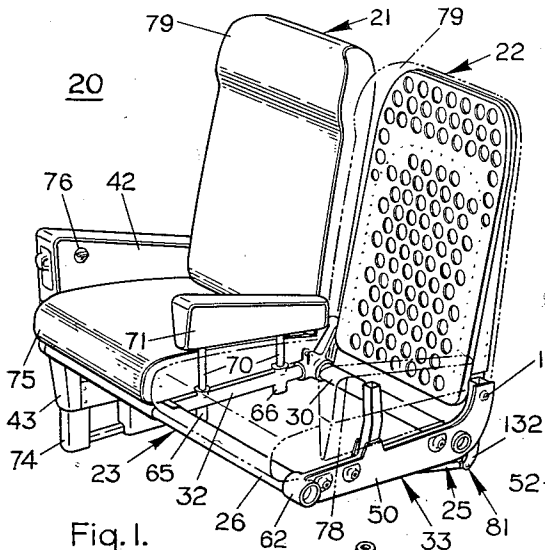

Fig. 1.

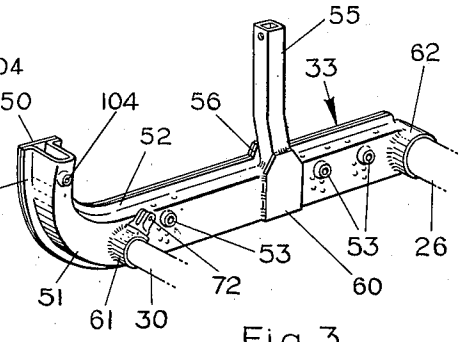

Fig. 3.

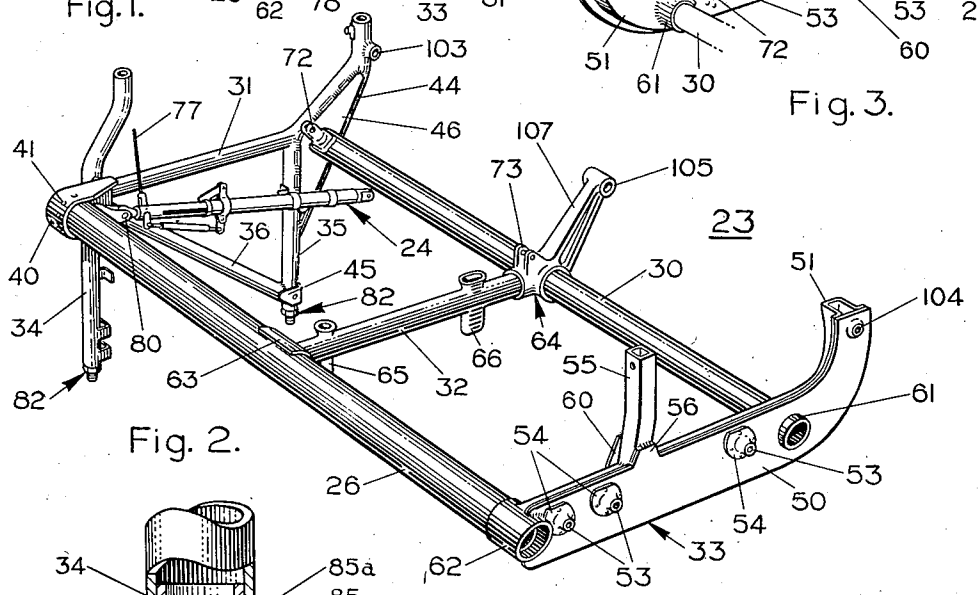

Fig. 2.

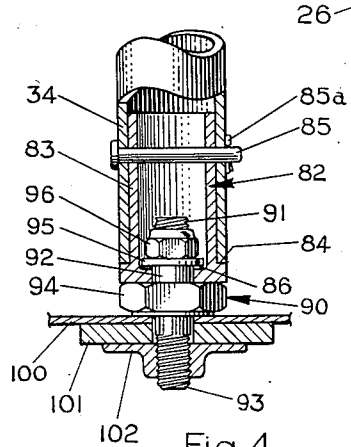

Fig. 4.

Inventor

GALE K. SHERMAN

By Walter J. Jason

Attorney

March 5, 1957 G. K. SHERMAN 2,783,821

CHAIR BACK

Filed May 18, 1953 2 Sheets-Sheet 2

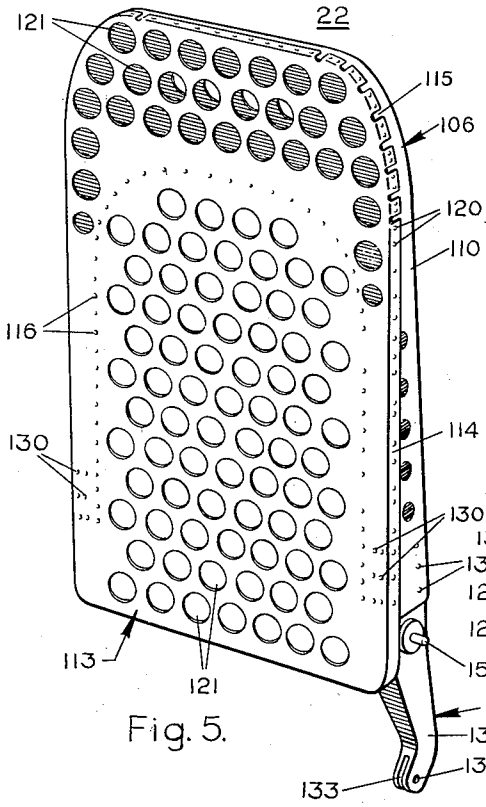

Fig. 5.

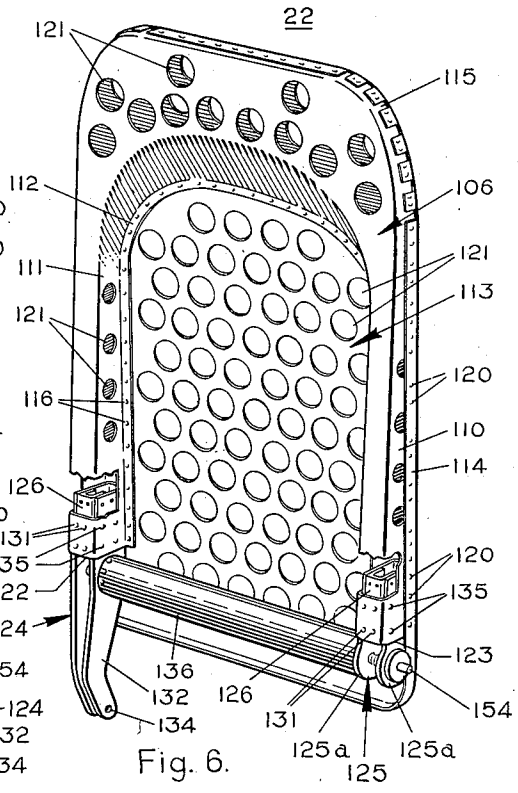

Fig. 6.

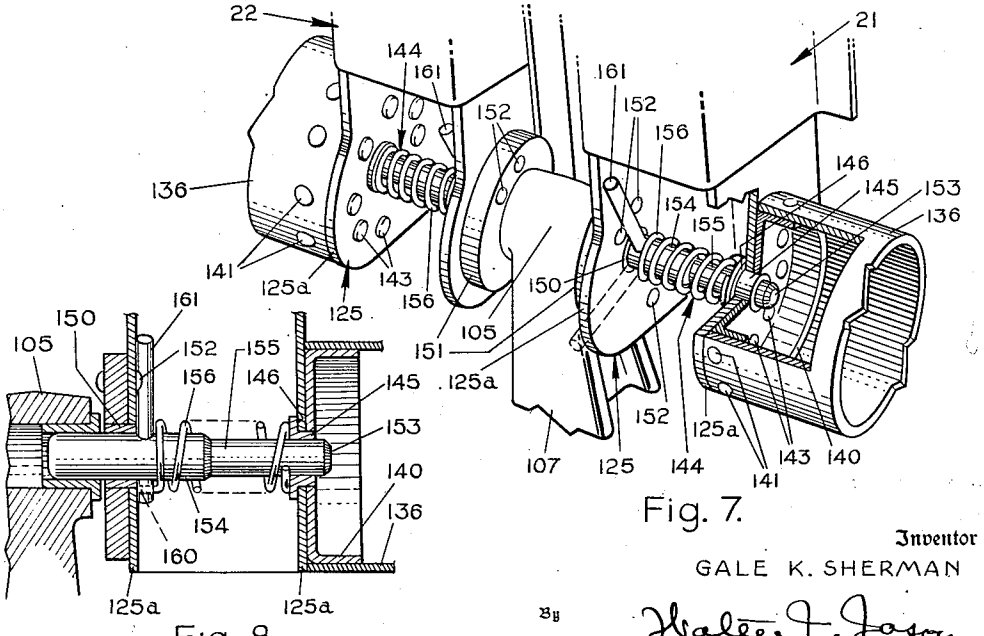

Fig. 7.

Fig. 8.

Inventor
GALE K. SHERMAN

By Walter J. Jason

Attorney

United States Patent Office 2,783,821 Patented Mar. 5, 1957

2,783,821

CHAIR BACK

Gale K. Sherman, San Diego, Calif., assignor, by mesne assignments, to General Dynamics Corporation, a corporation of Delaware

Application May 18, 1953, Serial No. 355,422

10 Claims. (Cl. 155—5)

This invention relates to chair structures and more particularly to a chair of improved construction especially adapted for use in transport vehicles such as aircraft, railway coaches, and the like.

The chair of the present invention is herein described in connection with a form intended for use in passenger aircraft and is exemplified by an anchored, reclinable double chair.

In the construction of airplanes, there has been a notable trend toward increased capacity, improved safety, and greater passenger comfort, and in the attainment of these goals, the design of the airplane chair is an important and contributing factor. For reasons of economy, both the airplane chairs and the arrangement thereof within the airplane have tended to become more compact, the chairs usually being arranged in the cabin seriatim, closely positioned one behind the other, and usually in sets of two on either side of a central aisle. The resulting compact seating arrangement, often called "high density seating," effects a desirable decrease in the cost per mile of transporting passengers because of the greater number of passengers carried. However, with such a seating arrangement, unless special attention is paid to proper design of the chairs, certain undesirable conditions may result. For example, if adequate leg room and adjustments to permit reclining are not provided, the comparatively close quarters are likely to cause passenger discomfort. Further, closely spaced chairs increase the likelihood of passenger impact with the chair back ahead in a crash or similar emergency, and if the chair back is a comparatively unyielding structure, such as the usual tubular construction, the passenger is likely to sustain serious injury. For this reason the backs of such closely spaced chairs should be designed to absorb such impact forces to minimize the possibility of injury to the passengers. Additionally, a high density seating arrangement in an airplane must be considered from the standpoint of the perennial aircraft problem of undesirable weight. This problem can become particularly acute since any excess weight which may exist in the individual chair is multiplied by the increased number of chairs crowded into the airplane cabin. Obviously therefore, chair weight should be held to a minimum. However, although every reduction in chair weight should be sought since it desirably increases the pay load of the airplane, the design of the chair should maintain an intelligent balance between reduced weight and adequate structural strength, which strength is particularly important where the chairs will be subject to the hard usage characteristic of a common carrier, such as a commercial airplane. Additionally, it is often desirable to completely or partially convert an airplane from passenger to cargo use and for this reason, the airplane chairs should be adapted to expeditious installation and removal. It will be evident that such chairs should also be simple and economical of manufacture, easily disassembled for repair and replacement, and require minimum maintenance and upkeep.

It is therefore a primary object of the present invention to provide an improved chair construction wherein the desirable chair features and characteristics above stated are embodied.

It is another object of this invention to provide a vehicle chair embodying an improved chair back constructed to reduce the possibility of injury to a passenger thrown against it under the impetus of a crash.

It is still another object of the invention to provide a chair of improved construction adapted to quick and easy installation in or removal from a passenger transport vehicle.

It is a further object of the invention to provide an improved chair which is comparatively simple and economical to manufacture, and which requires but limited maintenance.

It is yet another object of the invention to provide an improved form of chair that occupies a minimum of space, is light in weight and yet is sufficiently rugged and sturdy to withstand hard usage.

Another object of the invention is to provide an improved construction for a chair which permits quick assembly and disassembly of the chair back.

Other objects and features of the present invention will be readily apparent to those skilled in the art from the following specification and appended drawings wherein is illustrated a preferred form of the invention, and in which:

Figure 1 is a front perspective view of a double chair according to the invention, portions of the upholstery being cut away for clarity;

Figure 2 is a front perspective view of the seat frame according to the invention;

Figure 3 is a back perspective view of the outboard portion of the seat frame;

Figure 4 is a detail sectional view of a typical floor connection;

Figure 5 is a front perspective view of the outboard chair back;

Figure 6 is a back perspective view of the outboard chair back;

Figure 7 is a back perspective view of a portion of the double chair, illustrating in detail the sliding pin mechanism; and;

Figure 8 is a detail sectional view of the sliding pin mechanism.

The present invention, as shown in the drawings, is exemplified, for purposes of explanation, in a double chair. For clarity of explanation, the description hereinafter made will be concerned with an embodiment of the present invention adapted by its construction to location on the left side of the central aisle of an airplane, the aisle side usually being designated as inboard and the wall or fuselage side usually being designated as outboard. Although the invention is described with particular reference to such location, it is to be understood that the features of the invention also make it adaptable to modification for location on the right side of the airplane, as will be evident hereinafter. An airplane double chair to which this invention is particularly directed, includes a pair of tiltable chair backs pivotally carried by a seat frame which is rigidly secured and supported at its inboard side to the airplane floor, and at its outboard side to the airplane wall or fuselage. Thus, there are supports at the sides of the chair only, providing an abundance of leg room for passengers. Each back embodies a downwardly depending member which is connected to a seat lock or position adjusting mechanism which is, in turn, connected to the seat frame. The seat lock functions to permit adjustment of the position of the back to which it is attached in such a way as to lock the back at any de-

sired position, the adjustment being most conveniently accomplished by means of a control member mounted at the side of the chair, such as on the chair arm. Thus, a passenger may adjust the degree of recline or tilting of the chair back to his individual desire.

The structure of the chair mainly employs light-weight metal, such as aluminum alloy, the seat frame being for the most part constructed of welded tubing, and the chair backs being constructed of sheet metal adapted to progressively yield upon passenger impact during a crash. Further, the chair back is adapted to rapid connection and disconnection arrangement with the seat frame by a sliding pin mechanism, and the seat frame is similarly adapted to rapid connection and disconnection arrangement with the floor and wall, as will be more fully described hereinafter, the floor and wall connections being easily accessible and operable with an ordinary wrench while the chair back connections are susceptible of hand operation. In addition, throughout the seat frame an economy of weight and a preservation of adequate structural strength is effected through the use of strong and light weight bracing tubular construction in the seat frame, torque tube elements in both the seat frame and the backs, and sheet metal construction together with channel and box members in the chair backs. Thus, it will be evident that the airplane chair according to the present invention is characterized by improved strength and stress distribution, and by a simplicity of construction which lends itself well to economical manufacture.

Reference now will be had in detail to the drawings, and in particular to Figures 1 and 3 wherein is shown an airplane double chair **20**, according to the present invention, adapted to location on the left side of the central aisle of the airplane. In general the chair comprises an inboard chair back **21** and an outboard chair back **22** pivotally mounted to a double seat frame **23**, and a pair of conventional, telescoping type seat locks **24** and **25** to control and limit the extent of pivotal or recline movement of chair backs **21** and **22**, respectively.

Seat frame **23** comprises a pair of laterally disposed forward and rearward torque tubes or tubular members **26** and **30**, respectively, located at aproximately the same height above the floor of the airplane and maintained in spaced relation with each other by a tubular side member **31** at their inboard ends, a tubular middle member **32** at their mid portions, and a wall member or box frame **33** at their outboard ends. In addition a tubular forward leg **34** and a tubular rearward leg **35**, reinforced by a diagonal tubular side brace **36**, serve to support the inboard side of chair **20** at a suitable height above the floor of the airplane. A bracket **40** is disposed over the inboard end of forward member **26** to form a cap therefor, the forward portion of bracket **40** being rigidly secured about the forward periphery of tubular member **26**, as by a plurality of rivets **41**, and the rearward portion of bracket **40** being suitably rigidly secured to forward leg **34** at approximately the mid portion thereof. Leg **34** is vertically disposed from the floor of the airplane to the point of connection with bracket **40**, from which point leg **34** is rearwardly and upwardly disposed, as seen, to facilitate connection with an arm rest **42** and a side cover **43**. Leg **35**, extending upwardly from the airplane floor, is interconnected with leg **34** by side member **31**. Side member **31** is welded at its forward end to leg **34** at approximately the mid portion thereof, and also is welded to the upper end of leg **35**. Side member **31**, as shown, angles upwardly from the point of connection with leg **35** and is welded at its rearward end to the upper portion of a diagonally disposed tubular strut **44** which in turn is welded at its lower end at approximately the mid portion of leg **35**. In addition, legs **34** and **35** are reinforced by a side brace **36** which is welded at its forward end to forward leg **34** and side member **31** at their juncture, and at its rearward end to the lower end of leg **35**, the welded connection to leg **35** being reinforced by a spur **45** welded over said connection. It is to be noted that this arrangement of legs **34** and **35**, brace **36**, strut **44**, and side member **31** affords the present chair desirable rigidity and strength, and is characterized by simplicity and economy of construction and assembly. It is to be further noted that legs **34** and **35** constitute the only connection between the floor of the airplane and chair **20**, whereby passengers are provided ample leg room beneath chair **20**.

A triangular plate **46**, of a shape congruent with the triangular opening formed by brace **44**, the rearward portion of member **31**, and the upper portion of leg **35**, is welded to the sides of the aforementioned members to serve as a mounting plate for the inboard end of rearward member **30** which is rigidly secured thereto, as by a plurality of rivets. This completes the inboard securement of tubular members **26** and **30**.

Forward tubular member **26** and rearward tubular member **30** are connected at their outboard ends to the box frame **33**, as best seen in Figures 2 and 3. Frame **33** extends longitudinally for a greater portion of its length and, as shown, curves upwardly at its rearward portion. Frame **33** is adapted for securement to the fuselage or wall structure (not shown) of the airplane to provide support for the outboard side of chair **20** above the airplane floor. Specifically, box frame **33** comprises a vertically disposed back plate **50** which will be located adjacent the airplane wall, and a hat member **51** coextensive with plate **50**, hat member **51** embodying upper and lower horizontal portions the free margins of which extend at right angles to form vertical flanges **52** which are spot welded to back plate **50**. Member **51** and plate **50** define therebetween a channel more or less rectangular in cross section within which three vertically disposed channel shaped stiffeners (not shown) are each positioned at those points where frame **33** is to be connected to the aircraft wall structure, as will be apparent. These stiffeners provide support and reinforcement for three sleeves **53** which are laterally disposed through and welded within suitable openings provided in the stiffeners and in plate **50** of frame **33**. Further reinforcement for sleeves **53** is provided by three plates **54** each embodying a central hole through which a sleeve **53** projects, plates **54** being riveted to back plate **50**, and sleeves **53** being welded to plates **54**. Connection of frame **33** to the wall structure of the airplane is preferably by conventional bolts (not shown) which are adapted to project through sleeves **53** and have their projecting ends rigidly secured by suitable locknuts (not shown) to suitable brackets (not shown) provided by the wall structure of the airplane. It is readily apparent that the use of conventional bolts provides a rapid and easy means for connection and disconnection of chair **20** with the airplane wall or fuselage. It is understood that although three connection sleeves **53** have been shown the invention is not limited to that specific number of connection points. However, at least two connections should be provided, one forward and one rearward on frame **33** to assure a firm connection to the airplane wall.

Frame **33** is additionally provided with a generally vertically disposed square tubular fitting **55**, the lower end of which is welded to the hat member **51**. Fitting **55** serves to aid in the mounting of an inboard arm rest to chair **20**, as shown by broken lines in Figure 1. A pair of abutting tabs **56**, formed by extensions of the upper edges of plate **50** and hat member **51**, are welded to the lower portion of the forward face of fitting **55** to provide support for fitting **55**. Further support is furnished by a plate **60** which is welded to the lower portion of the rear face of fitting **55** and the vertical face of hat member **51**. Tabs **56** and plate **60** thus cooperate to maintain fitting **55** rigidly secured in desired position.

The right hand end, as viewed in Figure 2, of rearward tubular member **30** is rigidly secured, as by rivets, within a tubular socket **61** which is positioned and welded within an opening provided therefor in the rearward portion of frame **33**, and, similarly, forward tubular member **26** is rigidly secured at its right-hand end as by rivets, within a tubular socket **62** which is positioned and

welded within a semi-circular recess provided therefor in the forward end of frame 33. In this manner box frame 33 and tubular members 26 and 30 are rigidly affixed into assembly.

Middle member 32 serves to space apart the tubular members 26 and 30 at their midportions, member 32 being provided with a semi-circular fitting 63 which is welded to the forward end of member 32 and riveted to the rearward periphery of tubular member 26. The rearward end of middle member 32 is positioned within and riveted to a forwardly protruding tubular portion of a back support 64 which in turn is mounted upon rearward tubular member 30. Spacer member 32 carries a pair of tubular sockets 65 and 66, tubular socket 65 being vertically disposed and welded within a suitable opening in the forward portion of member 32, and similarly, tubular socket 66 being vertically disposed and welded within a suitable opening in the rearward portion of member 32. The sockets 65 and 66 serve to support a pair of legs 70 of a middle arm rest 71, as illustrated in Figure 1. It is to be noted that the opening of socket 66 is elongated, this in order that legs 70 may be fitted within the sockets 65 and 66 even though there be some misalignment between sockets 65 and 66 and legs 70.

A pair of bifurcated brackets 72 are each rigidly secured at opposite ends of rearward tubular member 30, as by rivets; brackets 72 in combination with a bracket portion 73, formed integral with back support 64, are adapted to secure the ends of a pair of suitable airplane seat belts (not shown). Such belts are intended to hold passengers in chair 20 in the conventional manner.

Seat frame 23 constitutes the primary structure for the support of two passengers seated in chair 20, and for the comfort and convenience of the passengers it may be provided with any suitable upholstery and decorative or protective covering, such as is partially illustrated in Figure 1. For example, by any suitable fastening means, arm rest 42, side cover 43, and a kick panel 74 may be mounted to the inboard side of chair 20. Arm rest 71 may be mounted to middle member 32, and, additionally, an arm rest 78, shown by broken lines, may be secured to box frame 33 at the outboard side of chair 20. Additional upholstery for chair 20 comprises a pair of seat cushions 75 arranged over members 26 and 30, and a pair of back cushions 79 suitably arranged over chair backs 21 and 22, as illustrated. A pair of suitable control members 76 are preferably mounted within arm rests 42 and 78 and connected by a pair of cables 77 to seat locks 24 and 25, respectively, whereby passengers may conveniently actuate seat locks 24 and 25. The present invention is not directed to any specific form of aircraft seat lock and it is intended that any suitable telescoping form of seat lock be used with the present invention. The seat locks are conventionally pivotally connected at their opposite ends to seat frame 23 and chair backs 21 and 22 whereby pivotal reclining movement of backs 21 and 22 are permitted under the control and adjustment of the passenger manipulating control member 76. Chair 20 according to the present invention since it accommodates two passengers utilizes a pair of seat locks 24 and 25, one end of lock 24 being pivotally connected to the inboard end of tubular member 26, as at 80, and the other end being pivotally connected to the lower portion of chair back 21. Similarly, one end of lock 25 is pivotally connected to the outboard end of tubular member 26, and the other end is pivotally connected to the lower portion of chair back 22, as at 81. By actuation of control member 76 and in turn cable 77, a passenger resting his weight against chair back 21, for example, will effect backward pivotal movement thereof by virtue of the telescoping or relative movement between the cooperating members of lock 24. Upon release of control member 76, seat lock 24 will lock, preventing further telescoping thereof, thereby securing chair back 21 in the adjusted position. In the absence of a backward force against back 21, pivotal movement of back 21 toward an upright position is similarly effected by actuation of control member 76, whereby relative movement of the cooperating members of lock 24 is permitted. It is to be understood, however, that such seat lock may be replaced by a rigid support bar when a reclining chair is not desired.

Simple and rapid connection and disconnection of chair 20 with the floor or other supporting surface of the airplane is provided by a pair of floor connectors 82 having a construction as illustrated in Figures 2 and 4. As shown, connector 82 associated with leg 34 comprises a cylindrical ferrule 83 fitted within leg 34, ferrule 83 embodying an outer peripheral shoulder portion 84 which seats against the lower end of leg 34, whereby ferrule 34 is prevented from passing completely up and within leg 34. A securing pin 85, passing through horizontally aligned holes in leg 34 and ferrule 83 and held in place by a cotter pin 85*a*, maintains ferrule 83 within leg 34. The lower end of ferrule 83 additionally embodies an inner peripheral flange 86 which serves to form a central opening for a stud 90. Stud 90 comprises an upper threaded shank 91, a larger diameter shoulder 92 below shank 91, a lower threaded shank 93, and an integral nut portion 94 which is located between portion 92 and shank 93. The upper end of stud 90 is fitted within ferrule 83 with shoulder portion 92 being rotatably positioned through the opening formed by flange 86. A washer 95, which is of a larger diameter than that of the opening in flange 86, and a locknut 96 are mounted on stud 90 whereby stud 90 is secured to ferrule 83. It is to be noted the vertical distance between washer 95 and integral nut 94 is greater than the vertical thickness of flange 86, whereby rotatable movement of stud 90 within ferrule 83 is permitted. Lower threaded shank 93 of stud 90 is adapted to be disposed through a suitable hole in the aircraft supporting structure such as floor member 100, and through a suitable hole in appropriate reinforcing structure, such as member 101, and to be threaded into a conventional nut plate 102 which is rigidly affixed to the underside of member 101. Thus it is apparent that chair 20 may readily be connected to or disconnected from the airplane floor merely by rotating nut 94, as by means of a conventional wrench. Further, when desired the complete floor connector 82 is adapted for easy removal or separation from leg 34 simply by removal of pin 85. The floor connector 82 which is associated with leg 35 is identical in construction and location with connector 82 as described in connection with leg 34.

The means and manner in which the seat backs 21 and 22 are attached to seat frame 23 will now be described. As shown in Figure 2, an inboard tubular sleeve 103 is transversely disposed and welded within a suitable opening in the uppermost portion of strut 44, and a similar outboard tubular sleeve 104 is horizontally aligned therewith and welded within a suitable opening in the upper rearward end of box frame 33. In addition, an integral middle sleeve 105 is carried by a rearwardly and upwardly extending arm 107 of back support 64, and is horizontally aligned with sleeves 103 and 104. Bushings (not shown) are pressed within sleeves 103, 104 and 105 to provide bearing surfaces for connections provided by chair backs 21 and 22, and also to reduce frictional wear which may result from repeated pivotal movement of the chair backs. The particular means by which backs 21 and 22 are mounted to seat frame 23 will be described in detail hereinafter in connection with the description of the structure of backs 21 and 22.

Chair backs 21 and 22 are substantially identical in construction and for this reason only chair back 22 will be described in detail, it being understood that the description is equally applicable to chair back 21 except as otherwise set forth. Referring now to Figures 5 and 6,

there is shown in detail the outboard chair back **22**. Chair back **22** preferably in its greater portion is constructed to sheet metal, whereby it may have the desired strength and yet be readily capable of progressive yielding under passenger impact. Back **22**, as best illustrated in Figure 6, comprises a sheet metal channel member **106** generally U-shaped in configuration, having along its outer free margins a forwardly extending flange **110**, and along its inner margins a forwardly extending flange **111** which terminates in an inwardly directed flange **112**. A sheet metal pan **113**, as best shown in Figure 5, is arranged across the front of member **106**, and embodies along its outer free margins a rearwardly extending peripheral flange **114** which overlaps peripheral flange **110** of U-shaped channel member **106**. For manufacturing convenience in forming flange **114**, portions thereof may be made intermittent rather than continuous, as illustrated at **115**. Pan **113** and member **106** are rigidly secured together by a plurality of rivets **116** uniformly spaced and disposed through the face of pan **113** and inwardly directed flange **112**, or channel **106** and, in addition by a plurality of rivets **120** uniformly spaced and disposed through overlapping peripheral flanges **110** and **114**. As shown, a plurality of access or lightening holes **121** have been provided in both member **106** and pan **113** to produce a light weight and more readily yieldable construction. Holes **121** also enable convenient access to rivets **120** with a bucking bar or plate, whereby the shank ends of rivets **120** may be bucked or upset.

The hollow generally U-shaped box-like structure formed by the rear face of member **106**, the flanges **110** and **111**, and the pan **113** terminates in a pair of laterally spaced open ends **122** and **123**. Within ends **122** and **123** are arranged the upper ends of a pair of channel shaped brackets **124** and **125**, respectively, with the walls of these brackets being disposed in abutment with the rearward face of pan **113** and the inner faces of flanges **110** and **111** as shown in Figure 6. A pair of channel shaped reinforcing elements **126** are also disposed within ends **122** and **123**, elements **126** being rearwardly disposed in abutment with the inner faces of member **106** and the channel legs of associated brackets **124** and **125**. A plurality of rivets **130** rigidly secure brackets **124** and **125** to pan **113**, while a plurality of rivets **131** rigidly secure elements **126** to member **106**. Additionally, a number of rivets **120** which secure flange **114** to flange **110** are also disposed through and secure brackets **124** and **125** thereto, while other rivets **135** rigidly secure brackets **124** and **125** to elements **126** and to flanges **110** and **111** of member **106**. As will be evident, there is sufficient space at each open end **122** and **123** to insert a bar for bucking rivets **120**, **130**, **131**, and **135**.

As is evident from the drawings, brackets **124** and **125** differ in configuration. Bracket **125** embodies at its lower end simply a pair of spaced ears **125–*a*** while bracket **124** embodies an integral downwardly depending, channel-shaped arm **132** which is provided at its lower end with a slot **133** and a pair of transversely aligned holes **134**, as shown in Figure 5, the slot **133** and holes **134** adapting arm **132** for pivotal connection to the rearward end of seat lock **25**.

Chair back **21** is identical with chair back **22** except for the reversal of the positions of brackets **124** and **125** carried by these backs. More specifically, bracket **124** of back **22** is located on the outboard side of back **22** in order to cooperate with seat lock **25**, as previously described, while bracket **124** of back **21** is located on the inboard side of back **21** in order to cooperate with seat lock **24**. Both brackets **125** will in turn be located substantially midway of seat frame **23**. Thus, as partially illustrated in Figure 7, when chair backs **21** and **22** are mounted to seat frame **23**, brackets **125** are located more or less side by side on opposite sides of arm **107** of back support **64**. Since backs **21** and **22** are substantially the same, like numbers are used to designate like parts in both the description and drawings of the chair backs.

Transversely disposed between brackets **124** and **125** is a cylindrical torque tube **136**, the open ends of which are closed by a pair of circular cup members **140** rigidly secured to tube **136** as by blind rivets **141**. Cup members **140** are further rigidly secured to associated brackets **124** and **125** by rivets **143**. Tube **136** serves to complete the boxlike structure formed by U-shaped member **106** and pan **113**, whereby a back structure is produced which is particularly characterized by its light weight and comparatively high resistance to torsional stresses. In addition, both pan **113** and U-shaped member **106** are capable of local deformation and yieldability under light loads, whereby upon passenger impact, for example, a cushioning effect is provided which tends to reduce the possibility of serious passenger injury during a crash or similar emergency.

In the construction of chair **20**, aluminum alloy material is preferably used wherever possible in order to reduce weight. In chair backs **21** and **22**, by way of example, thin gage aluminum alloy sheet metal, approximately 0.032" in thickness, has been found to be satisfactory for U-shaped channel member **106** and pan **113**.

A means for quickly and simply attaching chair backs **21** and **22** to seat frame **23** is provided by two pairs of sliding pin mechanisms **144** operatively carried by chair backs **21** and **22**, one mechanism **144** being positioned at each side of each of the backs **21** and **22**. Mechanisms **144** are identical in construction and, therefore, only one, that illustrated in the right portion of Figure 7 and in Figure 8, will be described in detail. Mechanism **144** comprises a bushing **145** press-fitted within suitable openings provided in cup member **140** and in the right ear portion **125*a*** of bracket **125**, bushing **145** embodying a peripheral shoulder portion **146** which is arranged in abutment with ear **125**. In addition, a laterally aligned bushing **150** is press-fitted within suitable openings provided in the left ear portion **125*a*** of bracket **125** and in a circular spacer **151**, which is rigidly secured to bracket **125** by a plurality of rivets **152**. Bushings **145** and **150** serve to pivotally accommodate and provide bearing support for a laterally-diposed pin **153** which comprises a larger diameter portion **154** disposed through bushing **150**, and a smaller diameter portion **155** disposed through bushing **145**. As will be apparent, in its normally engaged position, portion **154** of pin **153** projects outwardly of spacer **151**, whereby the projecting end of portion **154** is adapted to location within sleeve **105** of back support **64**. In addition, a helical compression spring **156** embodying a tang **160** at the left end thereof is mounted concentrically about pin **153**. Tang **160** is urged by the compressive force of spring **156** into a suitable opening provided in a release rod **161**, which is slidably disposed through a diametral hole provided in pin **153**. In its normally seated position, rod **161** is held by the compressive force of spring **156** between the bucked ends of two of the rivets **152**, as illustrated, whereby independent downward pivotal movement of rod **161** is prevented. However, rod **161** may be manually urged inwardly toward torque tube **136**, against the force of spring **156**, a distance sufficient to clear rivets **153**, whereby rod **161** may be downwardly and rearwardly pivoted to a generally horizontal position as illustrated by the broken lines of Figure 7. In this position, rod **161** serves as a handle whereby sufficient manual force may be inwardly exerted against rod **161** to compress spring **156**. As will be apparent, as rod **161** is moved inwardly to compress spring **156**, pin **153**, in turn, will be simultaneously moved inwardly until portion **154** abuts bushing **146**, at which point further inward movement is prevented. In this position, the left end of portion **154** of pin **153** is housed within bushing **150** in a position of disengagement with sleeve **105** when pins **153** of both mechanisms **144** asso-

ciated with a seat back are moved to disengaged positions as described the seat back may then be removed assuming that the associated seat lock has also been disengaged from arm **132** of the seat back. To re-engage the seat back it is necessary merely to release rod **161** whereupon the compressive force of spring **156** will urge rod **161**, and in turn, pin **153**, outwardly until rod **161** abuts the left side of bracket **125**, at which time the outward end of portion **154** will project outwardly of spacer **151** as before. Next, rod **161** may be pivoted upwardly to its normal, seated position between rivets **152**. Further, for such maintenance and replacement of parts as may be necessary, it is a relatively simple matter to disconnect and remove pin **153**, spring **156**, and rod **161** by urging tang **160** inwardly until it is withdrawn from rod **161**, thus permitting the removal of rod **161**, which in turn permits the outward sliding of pin **153**, thereby freeing spring **156**.

As was previously mentioned, a pair of sliding pin mechanisms **144** are incorporated in each chair back, mechanisms **144** being so located in chair backs **21** and **22** that portions **154** of pins **153** project outwardly from the respective chair backs, whereby portions **154** serve to pivotally cooperate with their respective associated sleeves **103**, **104**, and **105** of seat frame **23**. More specifically, as illustrated in Figures 1 and 2, chair back **22** is mounted between sleeves **104** and **105**, and chair back **21** is mounted between sleeves **103** and **105**. The mountiing of back **22**, for example, is effected by inwardly urging rods **161** at each side of back **22**, which in turn, houses the outwardly projecting ends of portions **154** within their correlative bushings **150**, and next positioning the back **22** between sleeves **103** and **104** with portions **154** in alignment with sleeves **103** and **104**. At this time, release of rods **161** permits introduction of portions **154** into corresponding sleeves **104** and **105**. In a like manner, portions **154** of back **21** may be introduced into sleeves **103** and **105**. Rods **161** may then be pivoted into their normal, seated position between rivets **152**, as was previously described. In addition, seat lock **24** is pivotally connected to downwardly depending arm **132** of back **21**, and likewise, lock **25** is pivotally connected to arm **132** of back **22**, whereby actuation of locks **24** and **25** produces a pivotal movement of backs **21** and **22**, respectively. If desired, only one sliding pin mechanism **144** need be associated with each chair back, in which case a rigidly mounted pin will be substituted for pin **153** of the mechanism **144** which is eliminated, such rigidly mounted pin protruding beyond its respective spacer **151** a distance sufficiently short to permit the chair back to be laterally pivoted about such pin for removal of the chair back after disengaging of the single mechanism **144**.

It is to be understood that chair **20** may be modified for location on the right side of the central aisle of the airplane, in which case the modified chair may be visualized as a mirrored image version of the chair **20** which has been illustrated.

While certain preferred embodiments of the invention have been specifically disclosed, it is understood that the invention is not limited thereto as many variations will be readily apparent to those skilled in the art and the invention is to be given its broadest possible interpretation within the terms of the following claims.

What I claim is:

1. In a vehicle chair having a seat frame, a chair back for connection to said seat frame, said chair back comprising a thin gage pan member having a plurality of openings therethrough whereby said pan member is more readily deformable under impact, a thin gage reinforcing member positioned upon said pan member and secured thereto, said reinforcing member being of a shape to form in cooperation with said pan member a closed arcuate hollow channel which is coextensive with at least three sides of said pan member and readily deformable under impact, and means carried by said chair back for connecting said chair back to said seat frame.

2. In a vehicle chair having a seat frame, a chair back for connection to said seat frame, said chair back comprising a pan member having a plurality of openings therethrough whereby said pan member is more readily deformable under impact, an arcuate channel member positioned upon said pan member and secured thereto to form therebetween a closed arcuate hollow channel which is readily yieldable under impact, a pair of supporting means secured to said channel and pan members adjacent the ends of said channel member, and means carried by said chair back and operatively associated with said pair of supporting means for connecting said chair back to the seat frame.

3. In a vehicle chair having a seat frame, a chair back for connection to said seat frame, said chair back comprising a sheet metal pan member having a plurality of lightening holes and having a rearwardly extending, outer peripheral flange, a sheet metal U-shaped channel member positioned upon the back of said pan member, said channel member having a plurality of lightening holes and including a forwardly extending, outer peripheral flange secured to the outer peripheral flange of said pan member and further including a forwardly extending inner peripheral flange terminating in an inwardly directed flange secured to said pan member to form with said pan member a hollow U-shaped box-like structure which terminates in a pair of open ends, a pair of mounting members secured to said pan and channel members adjacent said pair of open ends, and means carried by said chair back and operatively associated with said mounting members for connecting said chair back to the seat frame.

4. A tiltable chair back for mounting upon a vehicle seat frame, said chair back comprising a generally rectangular sheet metal pan member having a plurality of lightening holes and having a rearwardly extending, outer peripheral flange, a sheet metal U-shaped channel member positioned upon the back of said pan member, said channel member having a plurality of lightening holes and including a forwardly extending, outer peripheral flange secured to the outer peripheral flange of said pan member and further including a forwardly extending inner peripheral flange treminating in an inwardly directed flange secured to said pan member to form with said pan member a hollow U-shaped box-like structure which terminates in a pair of open ends, a pair of mounting members secured to said pan and channel members adjacent said pair of open ends, and means carried by said chair back and operatively associated with said mounting members for connecting said chair back to the seat frame, one of said mounting members including a depending arm adapted for operative connection with said seat frame for maintaining said chair back in a tilt position.

5. A chair back for connection to a vehicle seat frame, said chair back comprising a sheet metal pan member having a plurality of lightening holes and having a rearwardly extending, outer peripheral flange, a sheet metal U-shaped channel member positioned upon the back of said pan member, said channel member having a plurality of lightening holes and including a forwardly extending, outer peripheral flange fastened to the outer peripheral flange of said pan member and further including a forwardly extending inner peripheral flange terminating in an inwardly directed flange fastened to said pan member to form with said pan member a hollow U-shaped box-like structure which terminates in a pair of open ends, a pair of mounting members fastened to said pan and channel members adjacent said pair of open ends, a torque element secured between said mounting members to provide a structural transverse continuation of said hollow U-shaped box-like structure, and means carried by said chair back and operatively associated with said mounting members for connecting said chair back to the seat frame.

6. A tiltable chair back for connection to a vehicle seat frame, said chair back comprising a generally rec-

tangular sheet metal pan member having a plurality of lightening holes and having a rearwardly extending, outer peripheral flange, a sheet metal U-shaped channel member positioned upon the back of said pan member, said channel member having a plurality of lightening holes and including a forwardly extending, outer peripheral flange secured to the outer peripheral flange of said pan member and further including a forwardly extending inner peripheral flange terminating in an inwardly directed flange secured to said pan member to form with said pan member a hollow U-shaped box-like structure which terminates in a pair of open ends, a pair of mounting members secured to said pan and channel members adjacent said pair of open ends, a torque element secured between said mounting members to serve as a structural transverse continuation of said hollow U-shaped box-like structure, and means carried by said chair back and operatively associated with said mounting members for connecting said chair back to the seat frame, one of said mounting members including a depending arm adapted for operative connection with said seat frame for maintaining said chair back in a tilt position.

7. In a vehicle chair having a seat frame adapted for connection to the vehicle, a chair back, said chair back including a pan member and a channel member formed to extend in an arcuate configuration, said pan member and said channel member being constructed of readily yieldable sheet material, said pan member having a peripheral flange and said channel member having opposed leg portions providing spaced flanges one of which is rigidly secured to said pan member and the other of which is rigidly secured to said peripheral flange of said pan member to form a peripheral box-like structure, and means carried by said chair back for readily releasably and pivotally connecting said chair back to said seat frame.

8. In a vehicle chair having a seat frame, a chair back for connection to said seat frame, said chair back comprising a generally rectangular pan member, a channel member generally of U-shaped cross section positioned coextensive with at least three sides of said pan member, said channel member having the open portion of its U-shape closed by said pan member, said channel member being rigidly secured at the margins of its sides to said pan member to form a closed and integral box-like structure extending coextensive with at least three sides of said pan member, said pan member and said channel member being constructed of thin gage sheet material readily yieldable on impact, and means carried by said channel member for connecting said chair back to said seat frame.

9. In a vehicle chair having a seat frame adapted for connection to the vehicle, a tiltable chair back, said chair back including a thin sheet metal pan member and a thin sheet metal channel member positioned coextensive with at least three sides of said pan member, said channel member including a pair of opposed side portions integrally joined to a top portion to form an inverted U-shape configuration, said channel member being rigidly secured to said pan member at the free margin of each of said pair of opposed side portions to form a closed, box-like structure extending coextensive with said three sides of said pan member, readily releasable means carried by said chair back for pivotally connecting said chair back to said seat frame to permit tilting movement of said chair back, and a depending arm carried by said chair back and adopted for operative connection with said seat frame for maintaining said chair back in a tilt position.

10. A chair back for connection to a vehicle seat frame, said chair back comprising a generally rectangular pan member, a channel member generally of U-shaped cross section positioned coextensive with three sides of said pan member with the free margins of the legs of said channel member rigidly secured to said pan member to form a closed structure bounding said three sides of said pan member, a torque element of relatively heavy cross section secured between the ends of said channel member along the remaining side of said pan member whereby said torque element assumes twisting loads imposed upon said pan member and said channel member, said channel member by reason of its closed structure serving to transfer twisting loads to said torque element, said pan member and said channel member being made of locally deformable and yieldable sheet material adapted to pass twisting loads to said torque element, and means carried by said channel member for connecting said chair back to said seat frame.

References Cited in the file of this patent

UNITED STATES PATENTS

1,734,144	Morin	Nov. 5, 1929
1,840,275	Nuberg	Jan. 5, 1932
1,914,646	Rand	June 20, 1933
2,343,494	Burdick	Mar. 7, 1944
2,450,213	Turner	Sept. 28, 1948
2,523,960	Liljengren et al.	Sept. 26, 1950
2,525,008	Zakariasen	Oct. 10, 1950
2,575,221	Horner et al.	Nov. 13, 1951
2,585,447	Eichorst	Feb. 12, 1952
2,611,423	Blum	Sept. 23, 1952