(12) INTERNATIONAL APPLICATION PUBLISHED UNDER THE PATENT COOPERATION TREATY (PCT)

(19) World Intellectual Property Organization
International Bureau

(43) International Publication Date
3 September 2009 (03.09.2009)

PCT

(10) International Publication Number
WO 2009/108302 A1

(51) International Patent Classification:
G01B 21/20 (2006.01)

(21) International Application Number:
PCT/US2009/001166

(22) International Filing Date:
25 February 2009 (25.02.2009)

(25) Filing Language: English

(26) Publication Language: English

(30) Priority Data:
61/067,410 28 February 2008 (28.02.2008) US

(71) Applicant *(for all designated States except US)*: **CORNING INCORPORATED** [US/US]; 1 Riverfront Plaza, Corning, NY 14831 (US).

(72) Inventor; and

(75) Inventor/Applicant *(for US only)*: **STAUTER, Christian, L** [FR/JP]; Kachidoki Heights #601, 3-9-7 Kachidoki, Chuo-ku, Tokyo (JP).

(74) Agent: **ABLE, Kevin, M**; Corning Incorporated, SP-TI-3-1, Intellectual Property Department, Corning, NY 14831 (US).

(81) Designated States *(unless otherwise indicated, for every kind of national protection available)*: AE, AG, AL, AM, AO, AT, AU, AZ, BA, BB, BG, BH, BR, BW, BY, BZ, CA, CH, CN, CO, CR, CU, CZ, DE, DK, DM, DO, DZ, EC, EE, EG, ES, FI, GB, GD, GE, GH, GM, GT, HN, HR, HU, ID, IL, IN, IS, JP, KE, KG, KM, KN, KP, KR, KZ, LA, LC, LK, LR, LS, LT, LU, LY, MA, MD, ME, MG, MK, MN, MW, MX, MY, MZ, NA, NG, NI, NO, NZ, OM, PG, PH, PL, PT, RO, RS, RU, SC, SD, SE, SG, SK, SL, SM, ST, SV, SY, TJ, TM, TN, TR, TT, TZ, UA, UG, US, UZ, VC, VN, ZA, ZM, ZW.

(84) Designated States *(unless otherwise indicated, for every kind of regional protection available)*: ARIPO (BW, GH, GM, KE, LS, MW, MZ, NA, SD, SL, SZ, TZ, UG, ZM, ZW), Eurasian (AM, AZ, BY, KG, KZ, MD, RU, TJ, TM), European (AT, BE, BG, CH, CY, CZ, DE, DK, EE, ES, FI, FR, GB, GR, HR, HU, IE, IS, IT, LT, LU, LV, MC, MK, MT, NL, NO, PL, PT, RO, SE, SI, SK, TR), OAPI (BF, BJ, CF, CG, CI, CM, GA, GN, GQ, GW, ML, MR, NE, SN, TD, TG).

Published:

— *with international search report (Art. 21(3))*

WO 2009/108302 A1

(54) **Title**: METHOD FOR PREDICTING CONFORMABILITY OF A SHEET OF MATERIAL TO A REFERENCE SURFACE

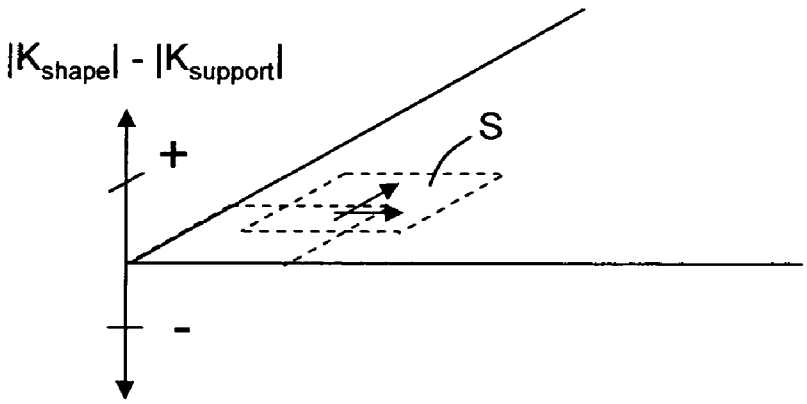

FIG. 10

(57) **Abstract**: A method of predicting the conformability of a free form shape, such as a sheet of glass, to a surface is described. The method uses a gravity free measurement method to first determine a shape of the sheet, after which the magnitude of the Gaussian curvature of the sheet is made. The Gaussian curvature of the sheet is compared to a predetermined maximum, and a decision is made whether to pass or fail the sheet based on the results of the comparison.

METHOD FOR PREDICTING CONFORMABILITY OF A SHEET OF MATERIAL TO A REFERENCE SURFACE

FIELD

[0001] The present invention relates to a method for predicting the conformability of a sheet of material of arbitrary shape to a reference surface. More particularly, the present invention relates to a method for predicting the ability of a glass sheet, such as a glass sheet suitable for use in a flat panel display, to conform to a support surface that may be used in the processing of the sheet.

TECHNICAL BACKGROUND

[0002] Many electronic or photonic devices that are environmentally sensitive may benefit from the use of glass packages that can be hermetically sealed. Such devices include photovoltaic devices, organic light emitting diode (OLED) displays, OLED lighting panels, plasma displays, surface conduction electron emitter displays (SEDs) and field emission displays (FEDs) to name but a few. Liquid crystal displays (LCDs), for example, are passive flat panel displays that depend upon external sources of light for illumination. They are typically manufactured as segmented displays or in one of two basic configurations. The substrate needs (other than being transparent and capable of withstanding the chemical conditions to which it is exposed during display processing) of the two matrix types vary. The first type is intrinsic matrix addressed, relying upon the threshold properties of the liquid crystal material. The second is extrinsic matrix or active matrix (AM) addressed, in which an array of diodes, metal-insulator-metal (MIM) devices, or thin film transistors (TFTs) supplies an electronic switch to each pixel. In both cases, two sheets of glass form the structure of the display. The separation between the two sheets is the critical gap dimension, of the order of 5-10 μm. The individual glass substrate sheets are typically less than about 0.7 mm in thickness.

[0003] The processing of glass sheets for large electronic devices such as displays or lighting panels requires conforming the sheet to a planar form. This is typically

performed by vacuum chucking the sheet to a planar surface. In spite of stringent manufacturing processing and specifications, such glass sheets, which can be as large as 10 square meters or more, are not perfectly flat. Thus, when forced to conform to a support surface, chucking errors can occur that may result in the sheet not lying perfectly within the plane. This is true if the shape of the sheet is not a purely developable shape, and especially true if the support surface is not itself flat.

SUMMARY

[0004] In a broad aspect, a method of determining the conformability of a glass sheet to a surface is described comprising determining a shape of the sheet, using the shape to calculate a Gaussian curvature magnitude for a plurality of points on the sheet, subtracting the plurality of Gaussian curvature magnitudes for the sheet from corresponding Gaussian curvature magnitudes for a support surface to determine a Gaussian curvature magnitude difference for each point of the plurality of points on the sheet, selecting a maximum Gaussian curvature magnitude difference for the sheet from the plurality of Gaussian curvature magnitude differences, comparing the maximum Gaussian curvature magnitude difference to a predetermined maximum threshold, and classifying the sheet as acceptable if the maximum Gaussian curvature magnitude is equal to or less than the threshold or unacceptable of the maximum Gaussian curvature magnitude is greater than the maximum threshold.

[0005] In some embodiments, the sheet shape may be characterized via a gravity free approach, such as placing the sheet in a neutral density fluid, or supporting the sheet on a bed of adjustable supports, such as adjustable pins.

[0006] The present invention will be understood more easily and other objects, characteristics, details and advantages thereof will become more clearly apparent in the course of the following explanatory description, which is given, without in any way implying a limitation, with reference to the attached Figures. It is intended that all such additional systems, methods features and advantages be included within this description, be within the scope of the present invention, and be protected by the accompanying claims.

BRIEF DESCRIPTION OF THE DRAWINGS

[0007] FIG. 1 is a perspective view, in partial cross section, of a fusion downdraw apparatus for forming thin glass sheets.

[0008] FIG. 2 is a cross sectional side view of a glass assembly including a frit seal that is sealed with a laser.

[0009] FIG. 3 is a cross sectional side view of an apparatus for measuring the shape of a sheet or material (e.g. a glass sheet) in a neutral density "gravity free" environment.

[0010] FIG. 4 is a cross sectional side view of an apparatus for measuring the gravity free shape of a sheet of material (e.g. a glass sheet) using a "bed of nails".

[0011] FIG. 5 is a perspective view of a sheet of material comprising a longitudinal hump positioned over a flat reference surface, the sheet of material with the hump representing a developable surface.

[0012] FIG. 6 is a perspective view of a sheet of material comprising a central peak or bubble positioned over a flat reference surface, the sheet of material with the peak representing a non-developable surface.

[0013] FIG. 7A and 7B are perspective views of a developable cylindrical surface (FIG. 7A) that can be unrolled into a flat (planar) surface as shown in the perspective view of FIG. 7B.

[0014] FIG. 8A is a perspective view of a non-developable sphere.

[0015] FIG. 8B shows a perspective view of the tearing that must occur to flatten one half (a hemisphere) of the sphere of FIG. 8A, making the hemispherical shape un-developable.

[0016] FIG. 9 is a qualitative plot of the force to flatten a developable vs. a non-developable sheet of material (e.g. a glass sheet).

[0017] FIG. 10 is a perspective view of a moving "window" used to characterize the Gaussian curvature of a sheet of material (e.g. a sheet of glass) that may have a broad distortion but low magnitude distortion.

[0018] FIG. 11 is a three dimensional plot of a sheet of otherwise flat material comprising a z-axis peak.

[0019] FIG. 12 is a three dimensional plot of the Gaussian curvature of the surface of FIG. 9.

[0020] FIG. 13 is a graph showing the relationship between the height and the lateral dimensions (diameter) of a symmetric bubble is a glass sheet, the bubble having a maximum Gaussian curvature magnitude of $1x10^{-8}$ mm^{-2}.

Detailed Description

[0021] In the following detailed description, for purposes of explanation and not limitation, example embodiments disclosing specific details are set forth to provide a thorough understanding of the present invention. However, it will be apparent to one having ordinary skill in the art, having had the benefit of the present disclosure, that the present invention may be practiced in other embodiments that depart from the specific details disclosed herein. Moreover, descriptions of well-known devices, methods and materials may be omitted so as not to obscure the description of the present invention. Finally, wherever applicable, like reference numerals refer to like elements.

[0022] One method of manufacturing flat glass sheets is by the so-called fusion downdraw method. In a fusion overflow downdraw process for forming glass ribbon, such as that illustrated in FIG. 1, an overflow trough member of forming wedge 20 includes an upwardly open channel 22 bounded on its longitudinal sides by wall portions 24, which terminate at their upper extent in opposed longitudinally-extending overflow lips or weirs 26. The weirs 26 communicate with opposed outer ribbon forming surfaces of wedge member 20. As shown, wedge member 20 is provided with a pair of substantially vertical forming surface portions 28 which communicate with weirs 26, and a pair of downwardly inclined converging surface portions 30 which terminate at a substantially horizontal lower apex or root 32 forming a straight glass draw line. It will be understood that surface portions 28, 30 are provided on each longitudinal side of the wedge 20.

[0023] Molten glass 34 is fed into channel 22 by means of delivery passage 36 communicating with channel 22. The feed into channel 22 may be single ended or, if desired, double ended. A pair of restricting dams 38 are provided above overflow weirs 26 adjacent each end of channel 22 to direct the overflow of the free surface 40 of molten glass 34 over overflow weirs 26 as separate streams, and down opposed forming surface portions 28, 30 to root 32 where the separate streams, shown in chain lines, converge to

form a ribbon of virgin-surfaced glass 42. Pulling rolls 44 are placed downstream of the root 32 of wedge member 20 and are used to adjust the rate at which the formed ribbon of glass leaves the converging forming surfaces and thus determine the nominal thickness of the ribbon.

[0024] The pulling rolls are preferably designed to contact the glass ribbon at its outer edges, specifically, in regions just inboard of the thickened beads which exist at the very edges of the ribbon. The glass edge portions which are contacted by the pulling rolls are later discarded from the sheet. A pair of opposed, counter-rotating pulling rolls are provided at each edge of the ribbon.

[0025] As glass ribbon 42 travels down the drawing portion of the apparatus, the ribbon experiences intricate structural changes, not only in physical dimensions but also on a molecular level. The change from a thick liquid form at, for example, the root of the forming wedge, to a stiff ribbon of approximately one half millimeter of thickness is achieved by a carefully chosen temperature field or profile that delicately balances the mechanical and chemical requirements to complete the transformation from a liquid, or viscous state to a solid, or elastic state. At a point within the elastic temperature region, the ribbon is cut at cut line 48 to form a glass sheet or pane 50.

[0026] In spite of stringent manufacturing controls used by glass manufacturers to form glass sheets, such as by the above process, these sheets may deviate in shape from a perfect plane. For example, in the fusion process described above, the glass ribbon is drawn from the forming wedge by rollers that contact only edge portions of the ribbon, providing opportunity for the central portion of the ribbon to warp. This warping may be caused by movement of the ribbon, or by the interplay of various thermal stresses that may manifest within the ribbon. For example, vibrations introduced into the ribbon by the downstream cutting process may propagate upward into the visco-elastic region of the ribbon, be frozen in to the sheet, and manifest as deviations in the planarity of the elastic ribbon. Variations in temperature across the width and/or length of the ribbon may also lead to deviations in planarity. Indeed, stresses that are frozen into the ribbon may be partially relieved when individual sheets of glass are cut from the ribbon, also resulting in a non-flat surface. In short, the shape of a sheet of glass derived from the ribbon is dependent upon the thermal history of the ribbon during the transition of the ribbon

through the visco-elastic region, and that thermal history may vary. Such changes in stress and/or shape may be detrimental to processes which rely on dimensional stability, such as the deposition of circuitry onto a substrate, such as is found in the manufacture of liquid crystal displays. For example, in the manufacture of liquid crystal displays, large glass sheets cut from the drawn ribbon may themselves be cut into a plurality of smaller sections. Each division may therefore result in a relief or redistribution of stress, and a subsequent shape change. Thus, while the resultant sheet may generally be considered flat, the sheet may in fact exhibit valleys and peaks across its surface that may interfere with flattening the sheet during subsequent processing. It is desirable therefore that a method be devised wherein the shape of a glass sheet cut from the ribbon may be accurately determined. The information thus obtained may used to modify the thermal history of the glass ribbon being drawn.

[0027] Display manufacturers receive the thin glass sheets from the glass manufacturer and further process the sheets to form a display device, or some other glass sheet-containing device. For example, in the manufacture of an organic light emitting diode display 52 shown in FIG. 2, one or more layers of organic materials 54 are deposited on a first glass sheet 56 (e.g. substrate 56). This first glass sheet is often termed the backplane. Backplane 56 may also comprise thin film transistors (TFTs) and electrodes (sot shown) for supplying an electric current to the organic layers and causing them to illuminate. However, because organic materials 56 are sensitive to various environmental factors, such as moisture and oxygen, the organic layers must be hermetically separated from the ambient environment. Thus, the organic layers are sealed within a glass envelop formed by backplane 56, a second glass sheet 58, sometimes referred to as the cover sheet or cover plate and a sealing material 60 disposed between the backplane and the cover sheet.

[0028] Several sealing methods may be used to connect the backplane to the cover plate, including the use of adhesives. While easy to apply and use, adhesives suffer from the necessary hermeticity to ensure the device exhibits a commercially viable lifetime before failure. That is, moisture and/or oxygen may eventually penetrate the adhesive seal, leading to a degradation of the organic layer(s), and the display device.

[0029] A more viable approach is to form a frit seal between the backplane and the cover sheet. In accordance with this approach, a line of a glass frit paste sealing material is dispensed over the cover plate in the form of a loop or frame, after which the fritted cover plate is heated to adhere the frit to the cover plate. The cover plate 58 is then positioned over backplane 56 with frit 60 (and the organic layer(s) 54) positioned therebetween. Frit 60 is then heated, such as with laser 64 emitting laser beam 66, to soften the frit and form a hermetic seal between backplane 56 and cover 58.

[0030] As can be imagined from the brief, foregoing description, precise alignment of the backplane and/or cover plate is required, both during the various deposition processes for the organic layers and TFTs, but also for the joining and sealing of the glass sheets (substrates). Typically, the substrates are required to be flat during such forming processes. For example, the backplane substrate is often vacuumed down onto a planar support surface for processing.

[0031] One metric currently used to characterize the flatness of a generally planar sheet of glass is a measure of the maximum "warp" of the glass. That is, a measure of the distance (or deviation) of a plurality of points on a surface of the sheet is determined with respect to a reference plane, and the deviation in distance represents the deviation of the sheet's shape from a true plane – the warp of the sheet. The maximum warp may then be used as a measure, albeit imprecise, of the shape of the sheet (e.g. flatness of the sheet).

[0032] FIG. 3 illustrates an embodiment of a method of determining the shape of a glass article, such as a glass sheet, according to embodiments of the present invention. In accordance with the embodiment of FIG. 3, generally designated by reference numeral 68, glass sheet 70 is positioned in container 72 containing fluid 74. Glass sheet 70 may be positioned on the surface of the fluid, or submerged within the fluid, as described in more detail hereinbelow. The glass sheet has a pre-determined average density and a pre-determined average refractive index. The fluid also has a pre-determined average density and a pre-determined average refractive index. Preferably, the average density of the fluid is at least about 85% of the average density of the glass sheet; more preferably at least about 90%; still more preferably at least about 95%. Fluid 74 is said to be of neutral density relative to glass sheet 48 when the average density of the fluid is at least about 85% of the average density of the glass sheet, and the glass sheet is said to be neutrally

buoyant, in that the glass sheet should remain in a given position within fluid 74 without mechanical support for a time sufficient to complete a given measurement. Suitable fluids, for example, are available from Cargille Inc., which manufactures refractive index matching liquids, immersion liquids, optical coupling liquids, refractometer liquids and other specialty liquids. Such liquids are advantageous in that they are typically non-toxic and the density of the fluid is easily tuned, such as by increasing or decreasing the concentration by evaporation, for example. Tuning of the fluid density may also be accomplished by mixing two or more fluids having different densities such that a desired pre-determined average density of the mixture is achieved. For example, Eagle 2000™ glass manufactured by Corning Incorporated has an average density of about 2.37 g/cc. Several fluids, such as a first fluid having an average density of 2.35 g/cc and a second fluid having an average density of 2.45 g/cc, may be mixed in amounts effective to obtain a third fluid having an average density substantially equal to 2.37 g/cc. One skilled in the art will realize that any fluid or fluids having the requisite properties of density may be used.

[0033] Continuing with FIG. 3, sensor 76 is used to measure a distance from the sensor to a surface of the glass sheet. Glass sheet 70 comprises a first side 78 facing sensor 76 (the sensor side), and a second, non-sensor-facing side 80. In the present embodiment, sensor side 78 may be referred to as top side 78 and non-sensor side 80 may be referred to as bottom side 80. To ensure that a surface of the glass may be detected by sensor 76, it is desirable that the average refractive index of fluid 74 be detectably different than the average refractive index of glass sheet 70. The allowable difference between the average refractive index of the fluid and the average refractive index of the glass is determined by such factors as the sensitivity of sensor 76. Alternatively, in the case where a given sensor is not able to distinguish between the difference between the average refractive index of the glass sheet and the average refractive index of the fluid, a thin film or coating (not shown) may be applied to a surface of glass sheet 70, preferably applied to bottom side 80 of the sheet, so that measurements of the distance between the sensor and the glass-coating interface may be obtained. Measurement of the coating itself, such as if the coating was adhered to top side 78 (sensor-side), may induce erroneous measurements, as one then measures the surface of the film rather than the surface of the

glass. The coating is preferably, though not necessarily, opaque, and may comprise, for example, a paint, ink or dye. A white, opaque coating has been found to achieve superior results. However, any coating that has a refractive index detectably different than the refractive index of the fluid may be acceptable. For example, the coating may comprise a polymer film wherein the polymer has an average refractive index detectably different from the average refractive index of the fluid. It is desirable that any stress applied by the coating to glass sheet 70 be insufficient to cause additional deformation of the glass sheet. For this reason, the coating may be applied to the glass sheet in a discontinuous fashion, such in a series of dots, lines or other shapes. Optionally, a thickness of the glass sheet may also be measured as a function of location on the glass sheet, and combined with the film-glass interface distance data to produce a surface contour map for the sensor side of the glass sheet.

[0034] In accordance with the embodiment, once glass sheet 70 has been positioned in fluid 74, sensor 76 may be used to measure a distance from the sensor to a surface of the glass sheet. Sensor 76 may be used to measure the distance d_1 between the sensor and top surface 78 of the glass sheet, or sensor 76 may be used to measure the distance d_2 between the sensor and bottom surface 80 of the glass sheet. Sensor 76 may be used to measure both d_1 and d_2, from which a thickness t of the glass sheet at any particular point may be determined as $t = d_2 - d_1$. Sensor 76 may comprise, for example, a laser displacement sensor. However, sensor 76 may comprise other devices as are known in the art for measuring distances, such as an acoustic sensor. Laser devices may include simple laser ranging devices, or more elaborate devices, such as, for example, a Michelson interferometer. The sensor may be time-based wherein a sensed energy, such acoustic, having a known velocity in the fluid, is timed. A suitable sensor, for example, is the LT8110 confocal laser displacement sensor manufactured by Keyence Corporation of America. Although sensor 76 may be positioned above the surface of the fluid, the sensor is preferably in contact with the fluid, therefore advantageously eliminating the air-fluid interface at fluid surface 82. Sensor 76 may be completely immersed in the fluid.

[0035] Another method for determining a gravity free shape employs a so-called bed-of-nails (BoN) measurement system, and is depicted in FIG. 4. In a BoN measurement

system, the sheet is supported from underneath by a grouping of pins. The pins are capable of vertical movement and can measure the supported force from the sheet. The travel of each pin may also be measured.

[0036] The heights of the pins are adjusted until each pin supports a specified target weight. For instance, a target weight for an even and flat substrate resting on equally distributed pins might be an equal fraction of the entire weight of the substrate. However, each target weight likely will be different from the next, and the target weights may be determined using a stress analysis based on finite element analysis. When all the pins are at their specified weight, they are supporting the particular substrate in its gravity-free shape. With the array of pins at their gravity-free positions, the gravity-free shape may be measured by optical means that scan the substrate surface and measure the heights over the entire surface, at and between the pins.

[0037] A problem with a BoN gauge is that changing the height of a single pin potentially changes the weight on all the other pins. For instance, in the extreme example of a single pin being raised high enough to raise the substrate above the tops of assorted pins, the assorted pins would no longer bear any weight, as they do not contact the substrate. Therefore, if the height on one pin is adjusted so that the target weight is supported momentarily, the amount of weight supported will be changed when the height on another pin is changed. If the system is adjusted manually, it will take a tremendous amount of time to adjust the pins. If the system is automated, an algorithm is needed to adjust the pins.

[0038] In a former system that is adjusted manually, each pin is adjusted separately. Each pin height is adjusted until the target weight is achieved. This single adjustment action is done one pin at a time, from the first pin to the last pin. However, since adjusting one pin changes the load on all the others, this procedure must be repeated time and time again, each cycle correcting for minor deviations introduced in the previous cycle.

[0039] In accordance with one or more embodiments, methods for adjusting the pin heights to simultaneously support the target weights for all pins is included. In particular, systematic calculation and execution of appropriate pin height adjustments for the array of pins is provided for. When all the pins are at their specified weight, their heights are at

the gravity-free height for that particular substrate. The array of pins at their gravity-free heights provides a measurement of the gravity-free shape, and potential shape distortion, if any. Height adjusters of the pins also track the heights of the pins, obviating the need for additional height measurement means, such as an optical scanner.

[0040] However, all pins may be adjusted at the same time. No evaluation of the pin force is necessary until all the pins are adjusted. The pin force is the upward force of the pin, which equals the downward force supported by the pin, if the pin is not in motion. By adjusting the pins as a group, the process accounts for the fact that adjusting one pin affects all the other pins. As a result, the advantage of achieving the target pin force on all the pins in almost every case is realized.

[0041] Referring to FIG. 4, a block diagram illustrates an exemplary bed of nails shape measurement gauge 100 in accordance with one or more embodiments of the present invention. The BoN gauge 100 may include a plurality of pins 110, having at least three pins 110, a gauge base 120, and a processor 130. A flexible plate-like object serves as the measurement subject 140, which here is depicted as glass substrate 140. The substrate 140 rests on top of the plurality of pins 110, and as the measurement subject 140 flexes under gravity, each pin 110 bears a specific weight. Each pin 110 includes a load cell 112 to measure the specific weight supported by the pin 110. The load cell 112 may be mounted on top of a height adjuster 114, which is a device, preferably motorized, that adjusts the height of the pin 110 in a known manner. Other arrangements are conceivable, such as having the load cell 112 underneath, and accounting for the weight of the height adjuster 114.

[0042] Each load cell 112 may transmit to processor 130 via circuitry 116 measurement signals 132 relating to the measured pin force, and the processor 130 then may perform an algorithm to calculate the necessary height adjustments for each pin 110. The processor 130 may transmit adjustment signals 134 to each height adjuster 114 via circuitry 116 to execute the calculated height adjustments. As is often the case, the better the algorithm, the sooner the load cells 112 will read the target load.

[0043] The present invention takes advantage of the fact that changing the pin height of a single pin 110 typically changes the load on all the pins 110. Say there are N pins 110 used in the gauge 100. The object is to find the pin heights such that the forces on each

pin 110 are at a specific value. For instance, for a substantially planar substrate 140 of relatively even thickness and density, an approximately equal distribution of mass may be assumed so that the specific weight value may equal 1/N of the substrate weight, given an equal distribution of the N pins 110.

[0044] According to one embodiment, three of the pins 110 will not be adjusted and hence they are stationary for each adjustment cycle. The three stationary pins 110 fix a reference plane, for which reason these pins 110 should not lie on a line. For each cycle, three pins will remain fixed. These may be adjusted in subsequent cycles. Thereafter, all remaining N-3 pins 110 may be adjusted as calculated below to also support the specific weight.

[0045] Calculating the pin height adjustments for the remaining N-3 pins 110 can be considered a set of simultaneous equations, with N-3 equations and N-3 unknowns which relate the change in pin heights to the change in pin weights. The three pins are fixed to define a reference plane with respect to which the equations relate. From a physics perspective, the sum of forces, sum of moments about one axis, and sum of moments about another axis represent three equations that must be satisfied. By fixing these three pins, these pins systematically will have their targeted weight satisfied by adjusting the others, which will have their target weight satisfied as well. From a geometry perspective, without fixing three points, rigid motion would be possible, though undesirable. Rigid motion could translate the substrate and rotate it about two different axes, which would yield more than one solution to the pin height adjustment set of equations. Thus, three points are fixed, so that there is only one solution to the pin height adjustments set of equations.

[0046] The warp measurements just described are only simple representations of the topography of sheet, and a poor indicator, in and of themselves, of one's ability to force the sheet flat, such as by vacuuming the sheet to a planar table. For example, let a sheet of material 200, such as a thin glass sheet, comprise a longitudinal ridge 202 that extends along a "length" of the sheet, such as parallel to one edge of the sheet, the deviation of the ridge having a maximum deviation from a flat reference plane 204 of $L+\delta$, as depicted in FIG. 6. Assume the ridge is shaped as comprising a portion of a cylinder. Let a second sheet 206 comprise a concavity 208 (e.g. hill or bubble) in a surface of the

sheet, wherein the maximum deviation of the concavity from the same reference plane 204 is also L+δ. Both sheets would exhibit the same maximum warp (δ). However, because sheet 200 comprising the cylindrical ridge (FIG. 5) is developable, it would be more easily flattened than sheet 206 having the concavity.

[0047] A developable surface is a surface that can be flattened without stretching, compression or tearing of the surface. For example, a cylinder as shown in FIG. 7A and discussed above, comprises a developable surface, since the cylindrical surface may be rolled out to lay flat without stretching or tearing of the surface (FIG. 7B). On the other hand, a spherical surface (FIG. 8A) is non-developable. Try to lay flat a portion of a sphere, a hemisphere for example, and the hemisphere must stretch or tear along multiple boundaries to comply (FIG. 8B). Thus, in the previous example, the sheet having the cylindrical ridge could be flattened to a planar table without deformation of the sheet, while conforming the second example sheet to the table would require deformation or tearing of the sheet.

[0048] Developable surfaces are surfaces that can be transformed into a plane surface through a transformation that preserves angles and distances. When a developable surface is transformed into a planar surface, no strain is induced into the surface. Alternatively, a developable surface is a surface that may be formed from a planar surface without stretching, compressing or tearing of the surface. Clearly, characterizing a sheet of glass via its maximum warp may be sufficient to indicate that the sheet is non-flat, but is quite inadequate as a measure of how well the sheet may be forced into a planar configuration.

[0049] The Gaussian curvature K of a surface is an intrinsic geometric property of a surface and defined as the product of the principal curvatures k_1 and k_2 of the surface at a given point on the surface. That is, $K = k_1k_2$. Physically, the Gaussian curvature describes how a surface deviates from a plane surface. The mathematical derivation of Gaussian curvature is well known and will not be covered extensively here. It is more instructive to consider the practical implications of the Gaussian curvature. To begin, it is dependent only on how distances and angles are measured on the surface. For example, if the Gaussian curvature of a surface is positive, the surface comprises a bump or peak at that point; if the Gaussian curvature is negative, the surface comprises a saddle

point. However, if the Gaussian curvature is zero, the surface at that point is equivalent to (behaves as) a flat surface. A simple experiment serves to illustrate this difference. The sum of the angles of a triangle drawn on a spherical surface (positive Gaussian curvature) is greater than 180°, whereas the sum of the angles for a similar triangle drawn on a cylinder (Gaussian curvature = 0) must total 180°. A developable surface has a zero Gaussian curvature, and can be transformed to a planar surface without stretching, compression or tearing. If the surface can be flattened without inducing strain, the Gaussian curvature remains constant. Consequently knowing the magnitude of the Gaussian curvature of a surface can be instructive in understanding the degree to which one surface may conform to another surface.

[0050] In accordance with an embodiment of the present invention, the Gaussian curvature can be used to characterize the conformability of a sheet of glass to a reference surface, e.g. a surface by which the sheet is supported. Preferably, the sheet is capable of conforming substantially to a support surface, implying that the magnitude of the Gaussian curvature of the sheet at each point of the sheet matches, or nearly matches, the magnitude of the Gaussian curvature of the support surface at each point of the support surface. If the reference surface is a plane, the sheet, to conform exactly to the reference (e.g. support) surface, should also have a Gaussian curvature of zero at each point on the surface of the sheet. The greater the magnitude of the difference between the respective Gaussian curvatures, the greater the resistance to conformability exhibited by the sheet. Put another way, the difference between the magnitudes of the Gaussian curvatures at each point on the sheet and a corresponding point on the support should be equal to or less than a predetermined maximum difference ($\Delta K = ||K_{sheet}| - |K_{support}|| \leq G$, where G is a predetermined maximum value. G is often dependent on the application for the sheet, and may be determined experimentally, or modeled). By corresponding points what is meant is a point on the sheet that overlays a point on the support when the sheet is pressed against the support. If ΔK is greater than G, the sheet may not conform sufficiently with the support. Upon flattening of the sheet, the strain energy created in the sheet may, for example, cause buckling or stress-induced birefringence in the glass.

[0051] From the foregoing, it can be anticipated that the Gaussian curvature magnitude of a singular peak or valley such as shown in FIG. 6 and exhibited by a sheet of glass

resting on a support surface, such as a flat surface, would not change much, assuming the sheet experiences only gravity forces and the reaction forces of the table. This becomes even truer as the magnitude of the Gaussian curvature increases. As the magnitude of the Gaussian curvature increases, the resistance of the sheet to flattening increases and greater force must be employed to flatten the sheet. As described above, this may result in increased detrimental effects (bucking, stress, etc.) that may impact the specific manufacturing process. Conversely, the greater the magnitude of Gaussian curvature, the more force that is required to flatten the sheet. Bending of the sheet occurs first in areas that have a developable shape, as this requires less energy than non-developable areas. This is shown by FIG. 9, which qualitatively shows the relationship between sheet flatness and the force that has to be applied to achieve the corresponding flatness. Surfaces to the left of the vertical dashed line would be represented by developable shapes, whereas surfaces to the right of the line would be characterized as having non-developable shapes. As the plot shows, in region 210 of the plotted curve developable surfaces are easily flattened with little force, the only resistance to flattening coming from the stiffness of the surface. On the other hand, non-developable surfaces require significant forces. In region 212 of the plotted curve, buckling of the surface is likely to occur, and in region 214, large membrane forces and moments are generated as the flattening forces are increased. For singularities of large Gaussian curvature magnitude and when a relatively weak force is applied (e.g. only gravity) one can expect that the Gaussian curvature magnitude of the singularity will not be affected.

[0052] To take advantage of Gaussian curvature, it is best that one understand the gravity-free shape of the sheet. That is, the shape the sheet would acquire in the absence of gravity. While achieving a truly gravity free state in an Earth-bound environment, a gravity-free condition can be closely approximated. For example, one might employ a neutral density system.

[0053] Once the shape of the sheet has been determined, such as through the use of a gravity-free sheet shape measurement method to determine a deviation from a reference plane at a plurality of points, the Gaussian curvature of the sheet may be determined at each point. For example, the Gaussian curvature of a local area on the sheet can be determined using an osculating paraboloid method. The Gaussian curvature K, and the

mean curvature, H, of the parabaloid $2z = ax^2+bxy+cy^2$ at its vertex are $K = ac-b^2$, and H is $(a + c)/2$. The intersection of a paraboloid with a normal plane at its vertex P is a parabola whose curvature at P is given by $k_n = k_1\cos^2\theta + k_2\sin^2\theta$, where k_1 and k_2 are the roots of the equation $k^2 - 2Hk + K = 0$, and θ is the angle between the given plane and the plane for which k_n attains its maximum (or minimum). The extremes of k_n, k_1 and k_2, are the principal curvatures described earlier. The use of osculating paraboloids for determining Gaussian curvature are well known and will not be covered further herein.

[0054] Alternatively, a portion of the sheet, or the entire sheet, can be fitted by a continuous function f such as $z = f(x, y)$. The Gaussian curvature of any point on the sheet then becomes

$$K = (f_{xx}f_{yy} - f^2{}_{xy})/(1 + f^2{}_x + f^2{}_y)^2 \qquad 1$$

Where $f_x = \partial f/\partial x$, $f_y = \partial f/\partial_y$, $f_{xx} = \partial^2 f/\partial x^2$, $f_{yy} = \partial^2 f/\partial y^2$, and $f_{xy} = \partial^2 f/\partial x\partial y$.

[0055] In addition to instances where the sheet contains a singularity (very small area wherein the difference in Gaussian curvature between the area of the sheet and the corresponding area of the support may nonetheless be large), the sheet may include a relatively large area having even a small but finite ΔK associated with it. In this case, flattening of a large area of even low magnitude would sum over the large area, again leading to the same detrimental effects. To account for large areas associated a small magnitude of ΔK, the absolute value of ΔK may be integrated over a moving window on the surface and the result normalized to the area of integration. The resulting integrated value of K (K_{int}) may then be used as a measure of the shape of the sheet. That is,

$$K_{\text{int}} = (1/S)\iint_S (\Delta K)ds\,. \qquad 2$$

Such a situation is illustrated in FIG. 10, where the integration area S is moved over the sheet surface.

[0056] It should be apparent that if the support is known to be flat (K is everywhere 0), then ΔK at each point of the sheet is simply the magnitude of the Gaussian curvature of the sheet at each point where the Gaussian curvature of the sheet is determined. ΔK may then be determined easily, without worrying about point-to-point correspondence between the sheet and the support. This case may arise, for example, during the deposition of TFTs in panels for displays. Supports for such deposition processes may weight several tons and be machined flat to extremely high tolerances.

[0057] If the support surface is non-planar, a similar analysis of the support surface must be performed to determine the Gaussian curvature of the support surface at points corresponding to the points on the sheet for which Gaussian curvature was determined.

[0058] Shown in FIG. 11 is a three dimensional modeled plot of an otherwise flat sheet comprising a bubble (peak) defined by the equation

$$z = c\exp(-\frac{x^2}{a^2} - \frac{y^2}{b^2}) \qquad 3$$

[0059] Where c is the height of the bubble and x and y are the half widths of the bubble along the x and y axes, respectively. For the purposes of this example, a is selected to be 150 mm, b is selected to be 50 mm and c = 30 mm. FIG. 12 illustrates the Gaussian curvature of the bubble of FIG. 11. The maximum Gaussian curvature magnitude is represented by

$$K_{max} = \frac{4c^2}{a^2b^2} \qquad 4$$

[0060] Equation 4 above demonstrates that an elongated bubble, e.g. a bubble where b >> a, may be flattened much easier than a symmetric bubble (a = b) of the same height because the maximum Gaussian curvature of the bubble becomes lower. FIG. 13 illustrates a plot of the diameter vs. height relationship for a symmetric bubble having a Gaussian curvature of $1x10^{-8}$ mm^{-2}. Bubbles having a height-diameter positioned to the right of the curve tend to exhibit good chucking behavior (capable of being flattened on a flat support via vacuum chucking), whereas bubbles having a height-diameter relationship to the left of the curve tend to exhibit poor chucking performance (e.g.

vacuum leaks, incomplete flattening, etc.). FIG. 13 shows that for a given diameter, a bubble should be below a certain height in order to be effectively flattened. Experimental work has demonstrated that a maximum Gaussian curvature magnitude of $1x10^{-8}$ mm^{-2} is a practical upper threshold for the maximum Gaussian curvature magnitude for thin sheets of display glass (having thicknesses less than about 1 mm).

[0061] The use of Gaussian curvature to characterize the conformability of a sheet of material, and in particular an elastic sheet of material such as a thin sheet of glass, can be used to:

- describe quantitatively the ability of a thin glass sheet to deform into any given shape. This methodology is not limited to a flat and horizontal support configuration.
- help understand the chucking behavior of the sheet, and help optimizing chucking recipes, because a thin glass sheet will mostly rest on the areas that are developable when lying on a flat table, the knowledge of its Gaussian curvature.
- can aid in the development of sheet shape specifications that are better connected with glass sheet chucking behavior than a warp single maximum value.
- can help in estimating strain and total pitch change upon chucking.

[0062] It should be emphasized that the above-described embodiments of the present invention, particularly any "preferred" embodiments, are merely possible examples of implementations, merely set forth for a clear understanding of the principles of the invention. Many variations and modifications may be made to the above-described embodiments of the invention without departing substantially from the spirit and principles of the invention. For example, although the example embodiments illustrated herein are shown in a vertical configuration, the present invention can be equally effective in a horizontal orientation. All such modifications and variations are intended to be included herein within the scope of this disclosure and the present invention and protected by the following claims.

What is claimed is:

1. A method of determining the conformability of a glass sheet to a surface comprising:

determining a shape of the sheet;

using the shape to calculate a Gaussian curvature magnitude for a plurality of points on the sheet;

subtracting the plurality of Gaussian curvature magnitudes for the sheet from corresponding Gaussian curvature magnitudes for a support surface to determine a Gaussian curvature magnitude difference for each point of the plurality of points on the sheet;

selecting a maximum Gaussian curvature magnitude difference for the sheet from the plurality of Gaussian curvature magnitude differences;

comparing the maximum Gaussian curvature magnitude difference to a predetermined maximum threshold; and

classifying the sheet as acceptable if the maximum Gaussian curvature magnitude is equal to or less than the threshold or unacceptable of the maximum Gaussian curvature magnitude is greater than the maximum threshold.

2. The method according to claim 1, wherein the determining a shape comprises determining a gravity free shape.

3. The method according to claim 2, wherein the determining a gravity free shape comprises immersing the sheet in a neutral density fluid.

4. The method according to claim 2, wherein the determining a gravity free shape comprises supporting the sheet on a plurality of adjustable pins adapted to exert a predetermined force against the sheet.

5. The method according to claim 1, further comprising forming a thin film device on the sheet.

6. The method according to claim 1, wherein the Gaussian curvature magnitude of the support surface is everywhere substantially zero.

7. The method according to claim 1, wherein the maximum threshold is less than or equal to about $1x10^{-8}$ mm^{-2}.

8. The method according to claim 1, wherein the plurality of points on the sheet represent a subset of a total number of points on the entire sheet, and the subset of points is varied to produce a moving window of points.

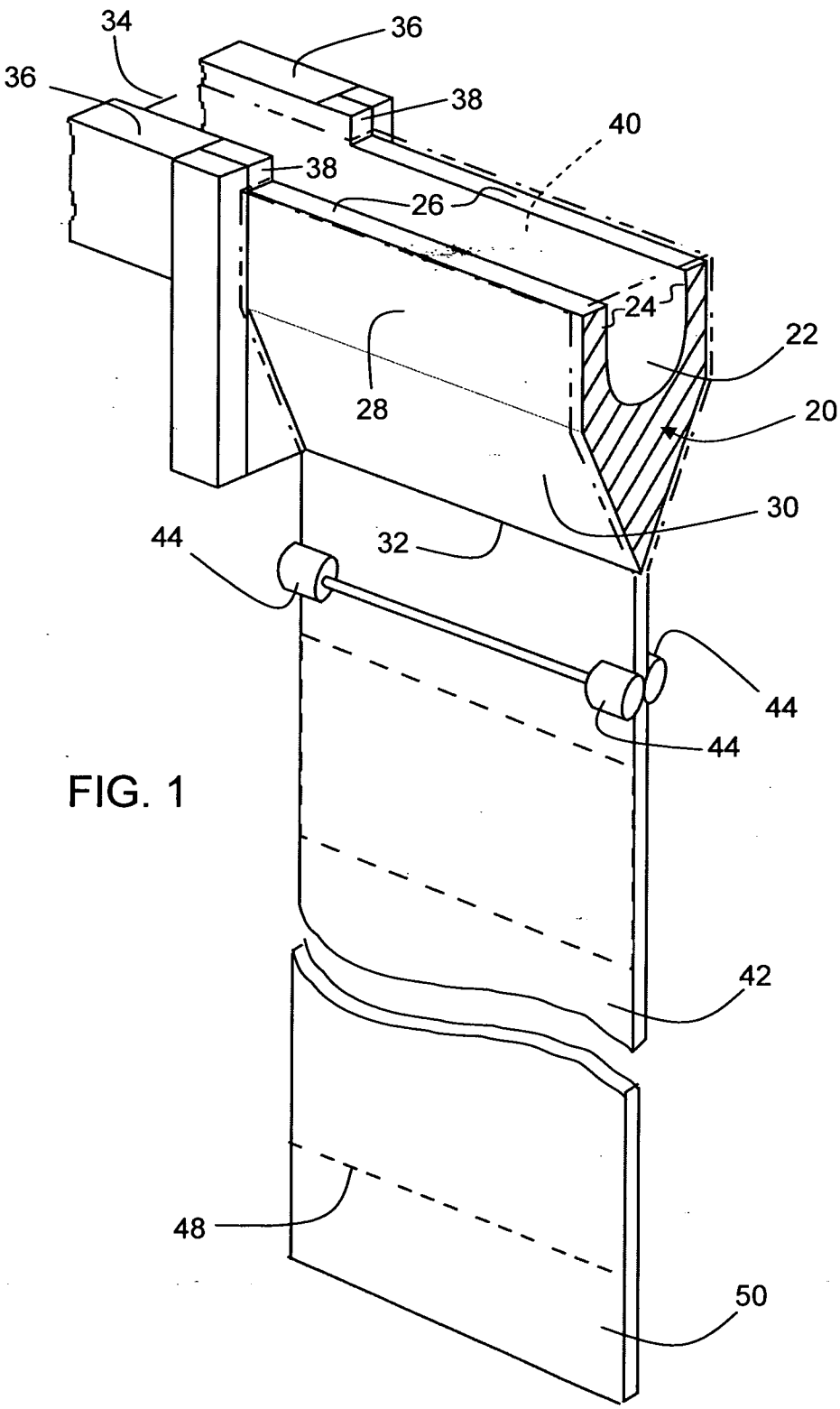

FIG. 1

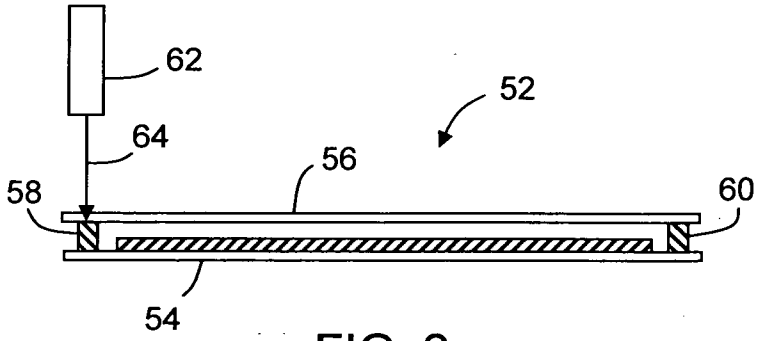

FIG. 2

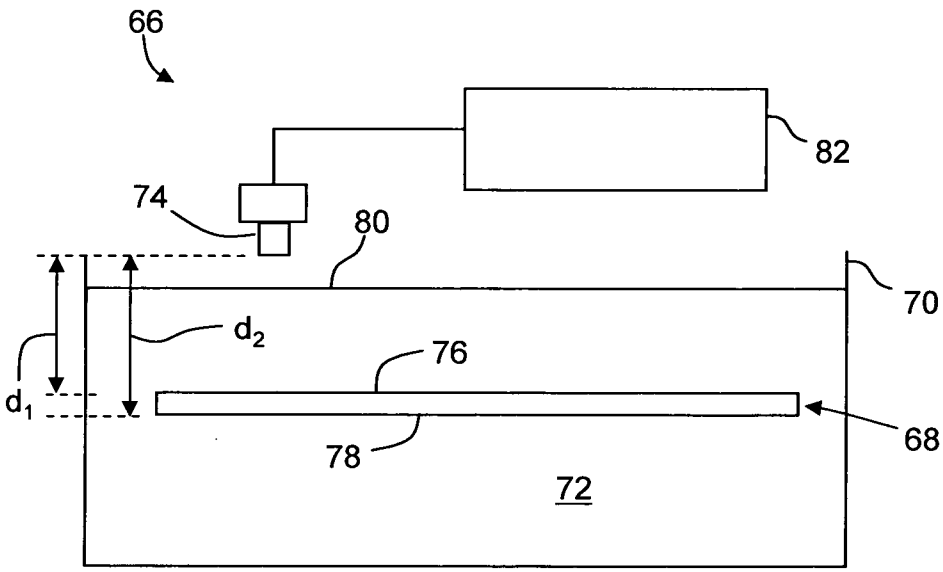

FIG. 3

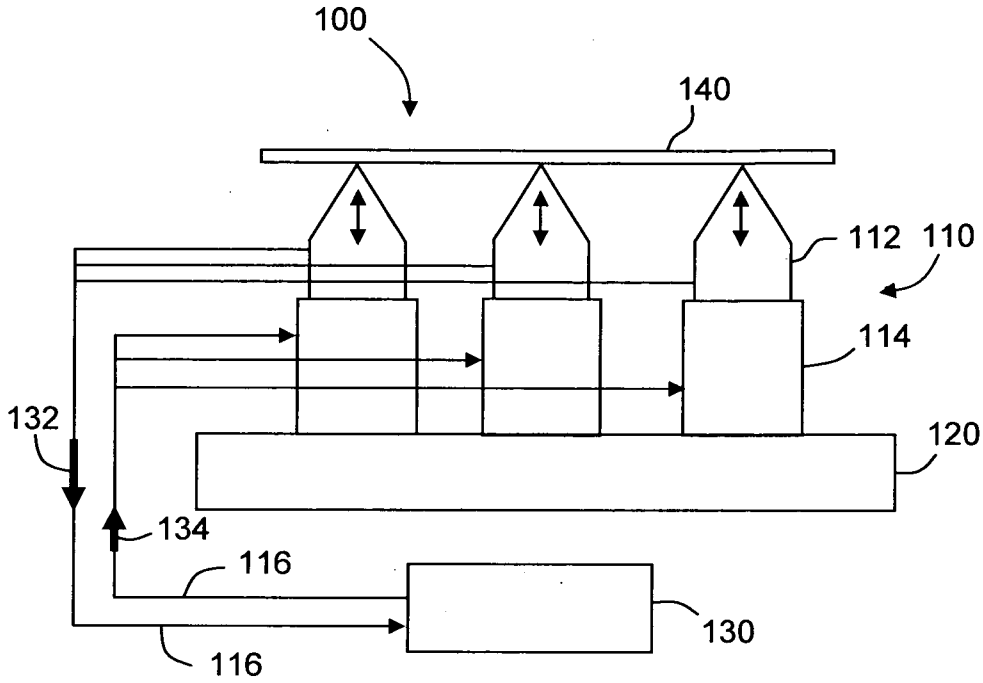

FIG. 4

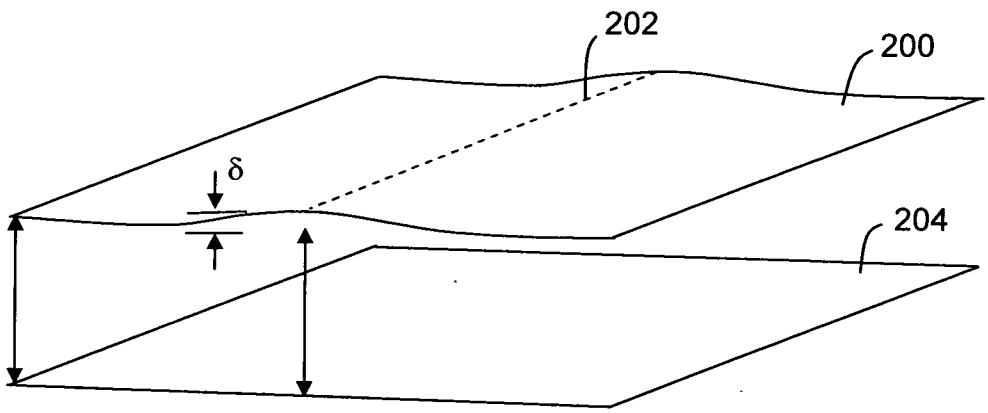

FIG. 5

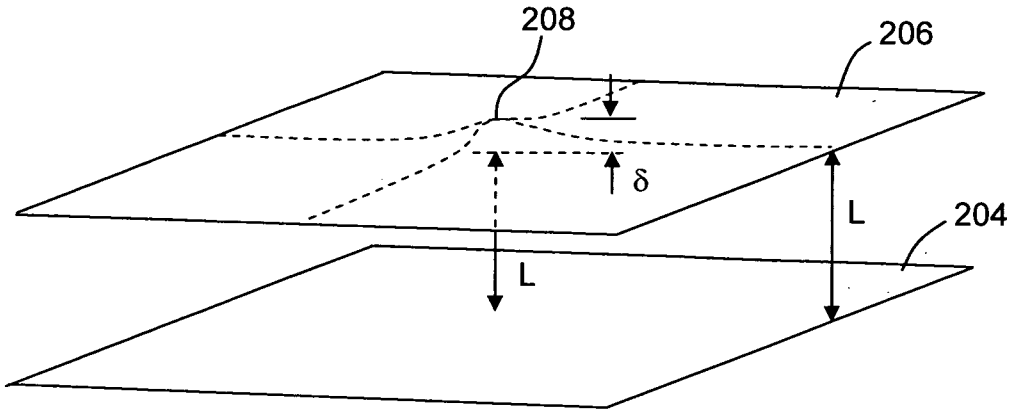

FIG. 6

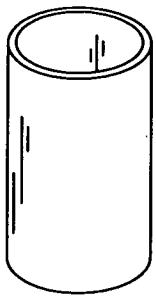

FIG. 7A

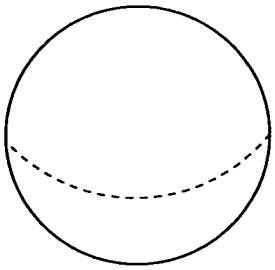

FIG. 8A

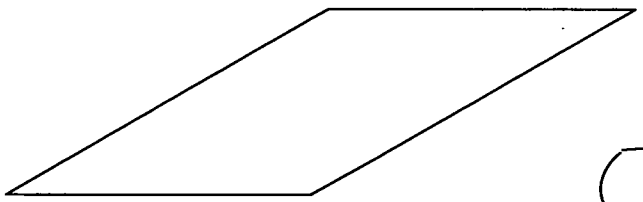

FIG. 7B

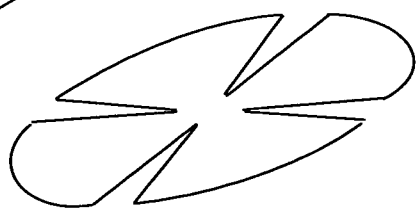

FIG. 8B

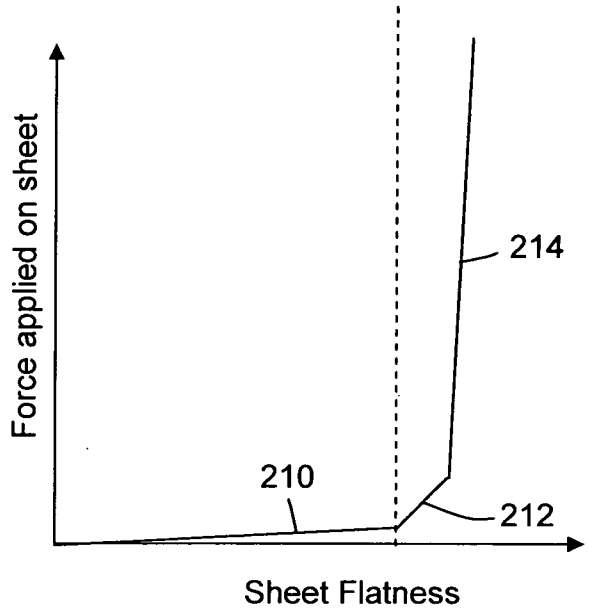
Force applied on sheet
214
210
212
Sheet Flatness

FIG. 9

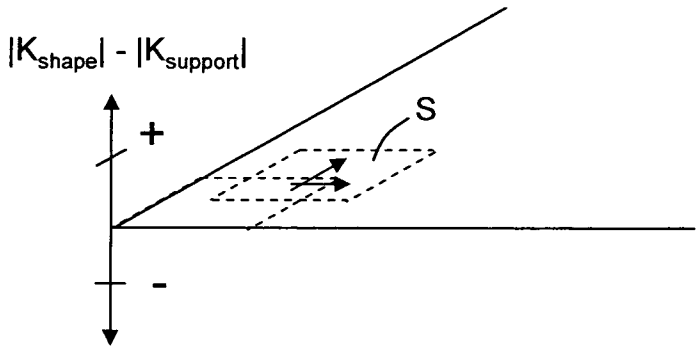
|K_shape| - |K_support|
+
S
-

FIG. 10

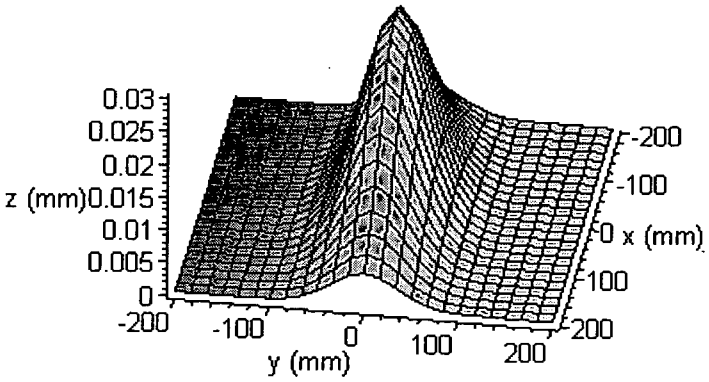
0.03
0.025
0.02
z (mm)0.015
0.01
0.005
0
-200
-100
0
100
200
y (mm)
-200
-100
0 x (mm)
100
200

FIG. 11

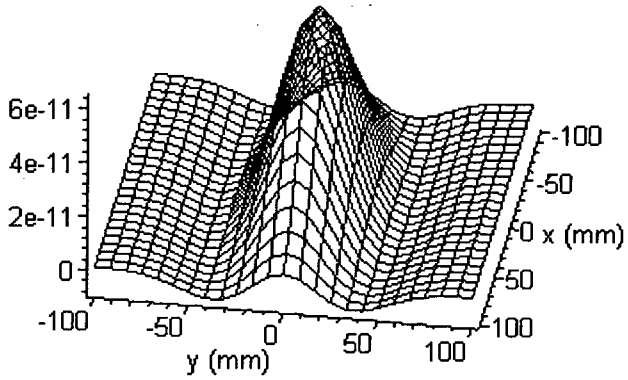
6e-11
4e-11
2e-11
0
-100
-50
0
50
100
y (mm)
-100
-50
0 x (mm)
50
100

FIG. 12

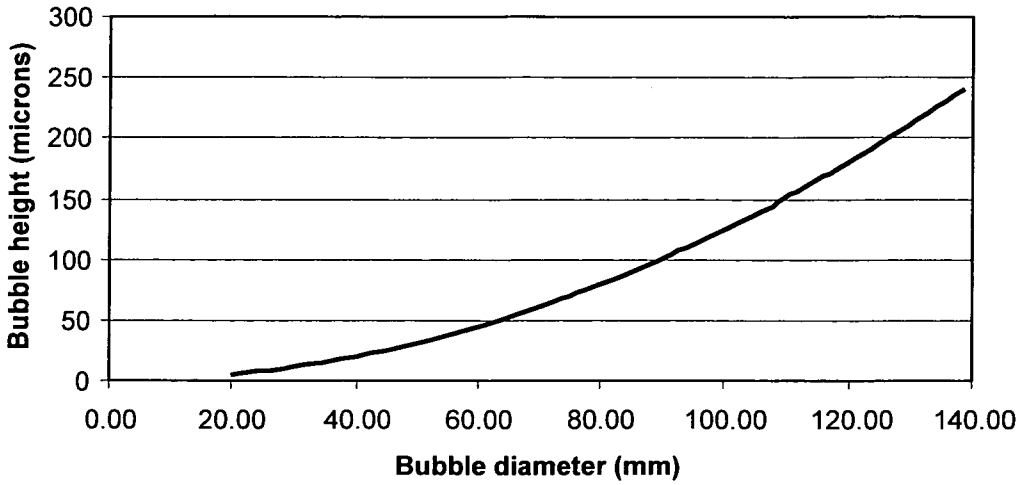
300
250
200
150
100
50
0
Bubble height (microns)
0.00
20.00
40.00
60.00
80.00
100.00
120.00
140.00
Bubble diameter (mm)

FIG. 13

INTERNATIONAL SEARCH REPORT

International application No
PCT/US2009/001166

A. CLASSIFICATION OF SUBJECT MATTER
INV. G01B21/20

According to International Patent Classification (IPC) or to both national classification and IPC

B. FIELDS SEARCHED

Minimum documentation searched (classification system followed by classification symbols)
G01B

Documentation searched other than minimum documentation to the extent that such documents are included in the fields searched

Electronic data base consulted during the international search (name of data base and, where practical, search terms used)
EPO-Internal, WPI Data

C. DOCUMENTS CONSIDERED TO BE RELEVANT

Category*	Citation of document, with indication, where appropriate, of the relevant passages	Relevant to claim No.
A	EP 0 977 009 A (RIKEN [JP]; AMADA METRECS CO [JP] RIKEN [JP]; AMADA CO LTD [JP]) 2 February 2000 (2000-02-02) paragraphs [0008] - [0014], [0018] - [0023] abstract	1-8
A	EP 1 030 162 A (RIKEN [JP]) 23 August 2000 (2000-08-23) paragraphs [0019] - [0025] abstract; figures 1,2	1-8

☐ Further documents are listed in the continuation of Box C.

☒ See patent family annex.

* Special categories of cited documents :

"A" document defining the general state of the art which is not considered to be of particular relevance

"E" earlier document but published on or after the international filing date

"L" document which may throw doubts on priority claim(s) or which is cited to establish the publication date of another citation or other special reason (as specified)

"O" document referring to an oral disclosure, use, exhibition or other means

"P" document published prior to the international filing date but later than the priority date claimed

"T" later document published after the international filing date or priority date and not in conflict with the application but cited to understand the principle or theory underlying the invention

"X" document of particular relevance; the claimed invention cannot be considered novel or cannot be considered to involve an inventive step when the document is taken alone

"Y" document of particular relevance; the claimed invention cannot be considered to involve an inventive step when the document is combined with one or more other such documents, such combination being obvious to a person skilled in the art.

"&" document member of the same patent family

Date of the actual completion of the international search	Date of mailing of the international search report
21 April 2009	28/04/2009

Name and mailing address of the ISA/	Authorized officer
European Patent Office, P.B. 5818 Patentlaan 2 NL - 2280 HV Rijswijk Tel. (+31-70) 340-2040, Fax: (+31-70) 340-3016	Passier, Martinus

1

INTERNATIONAL SEARCH REPORT

Information on patent family members

International application No
PCT/US2009/001166

Patent document cited in search report	Publication date	Patent family member(s)	Publication date
EP 0977009 A	02-02-2000	AU 7079198 A	24-11-1998
		CA 2288177 A1	05-11-1998
		DE 69838581 T2	07-02-2008
		WO 9849524 A1	05-11-1998
		JP 3937212 B2	27-06-2007
		US 6683985 B1	27-01-2004
EP 1030162 A	23-08-2000	CA 2307376 A1	02-03-2000
		WO 0011433 A1	02-03-2000
		JP 3344649 B2	11-11-2002
		JP 2000065560 A	03-03-2000
		US 6711530 B1	23-03-2004