(12) INTERNATIONAL APPLICATION PUBLISHED UNDER THE PATENT COOPERATION TREATY (PCT)

(19) World Intellectual Property Organization
International Bureau

(43) International Publication Date
26 July 2001 (26.07.2001)

PCT

(10) International Publication Number
WO 01/53622 A1

(51) International Patent Classification[7]: E04B 2/08, F16B 21/08, 37/08, 37/12

(21) International Application Number: PCT/EP01/00616

(22) International Filing Date: 17 January 2001 (17.01.2001)

(25) Filing Language: English

(26) Publication Language: English

(30) Priority Data:
1014082 17 January 2000 (17.01.2000) NL

(71) Applicant and
(72) Inventor: VAN DER HEIJDEN, Franciscus, Antonius, Maria [NL/BE]; Grotenhout 2, B-2275 Lille (BE).

(74) Agent: HYDRO S.A.; Bleukx L.L.M., Marcel Thirylaan 83, B-1200 Brussel (BE).

(81) Designated States *(national)*: AE, AG, AL, AM, AT, AU, AZ, BA, BB, BG, BR, BY, BZ, CA, CH, CN, CR, CU, CZ, DE, DK, DM, DZ, EE, ES, FI, GB, GD, GE, GH, GM, HR, HU, ID, IL, IN, IS, JP, KE, KG, KP, KR, KZ, LC, LK, LR, LS, LT, LU, LV, MA, MD, MG, MK, MN, MW, MX, MZ, NO, NZ, PL, PT, RO, RU, SD, SE, SG, SI, SK, SL, TJ, TM, TR, TT, TZ, UA, UG, US, UZ, VN, YU, ZA, ZW.

(84) Designated States *(regional)*: ARIPO patent (GH, GM, KE, LS, MW, MZ, SD, SL, SZ, TZ, UG, ZW), Eurasian patent (AM, AZ, BY, KG, KZ, MD, RU, TJ, TM), European patent (AT, BE, CH, CY, DE, DK, ES, FI, FR, GB, GR, IE, IT, LU, MC, NL, PT, SE, TR), OAPI patent (BF, BJ, CF, CG, CI, CM, GA, GN, GW, ML, MR, NE, SN, TD, TG).

Published:
— *with international search report*
— *before the expiration of the time limit for amending the claims and to be republished in the event of receipt of amendments*

For two-letter codes and other abbreviations, refer to the "Guidance Notes on Codes and Abbreviations" appearing at the beginning of each regular issue of the PCT Gazette.

(54) Title: SYSTEM FOR CONNECTING ELEMENTS

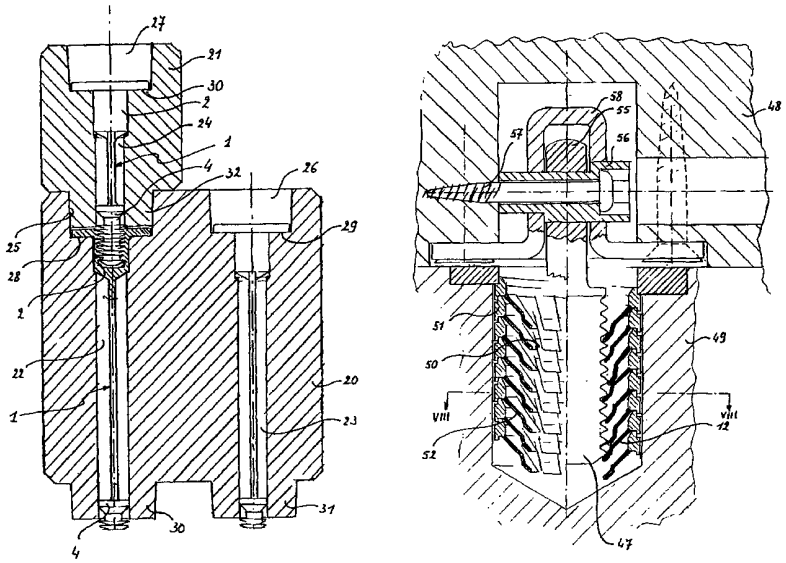

(57) Abstract: A system (2, 4) for connecting releasing two elements (1) with each other, comprising a rod shaped product with a male part (4) and a female part (2) with a round section, wherein this product is integral or connectable with each element, wherein one of the parts, the male or female part, is provided with a screw thread (6) and the other part is provided with at least one protruding tooth (9), which, when the male and female parts are fit into each other, is engaged into the screw thread, wherein at least the part provided with the protruding tooth comprises a strip extending in the longitudinal direction of the part on which the protruding tooth is arranged, in such a way that, when the male and female parts are being pressed into each other, the tooth may be pressed through an elastic distortion axially onto the screw thread, and the tooth shape and the screw thread are chosen in such a way that an axial movement in the opposite direction is prevented.

WO 01/53622 A1

SYSTEM FOR CONNECTING ELEMENTS

The present invention relates to a system for connecting releasingly two elements with each other, comprising a male part being integral or connectable with a first element, and a female part being integral or connectable with the second element, wherein one of the parts, the male or female one, has a round section and is provided with a screw thread and the other part is provided with at least one protruding tooth, being engaged into the screw thread with the male and female parts being inserted into each other.

Such a connecting system is generally known. In practice, a metal part is used on the one hand, and on the other hand, a synthetic part having such a shape that the synthetic part or at least parts thereof can be elastically or plastically distorted. So-called nail plugs are well known, being made of a synthetic sheath-shaped part in which inwardly protruding edges are formed, and a nail or dowel part partially provided with a screw thread. After sticking the nail part into the sheath, the nail part may be unscrewed again. However, the sheath is not to be used again since it has suffered from permanent damages. When sticking the nail part, quite strong forces are applied.

The aim of the present invention is to

CONFIRMATION COPY

provide a system of the type as described in the opening paragraph, so overcoming the above-mentioned disadvantages.

This object is reached according to the invention in that the longitudinal direction of the connecting element comprises a rod on which protruding teeth are provided, in such a way that, when the male and female parts are being pressed into each other, the teeth can be pressed through an elastic distortion on the screw thread and that the tooth shape and the screw thread are chosen in such a way that an axial movement in the opposite direction is prevented.

Using the teeth makes it possible to make the female and the male parts engaged into one another so that at least one tooth is always active in the connection. The mutual distance between the teeth is generally chosen so that, for example, when axially pressed together for every 1/3 of the pitch, at least one tooth is active. When distorting elastically the teeth upon the connection, the teeth are not damaged and can be used repeatedly.

Other features and advantages of the invention will become evident from the following description referring to the accompanying drawings in which :

Fig. 1 is a side view, partially in section of a connecting element according to the invention,

Fig. 2 is a section along line II-II in Fig. 1,

Fig. 3 is a section along line III-III in Fig. 2,

Fig. 4 is a section of a connection by means of the connecting element according to Fig. 1,

Fig. 5 is a diagrammatic section showing two parts connected through an element according to Fig. 1,

Fig. 6 is a side view, partially in section

of a modified embodiment of a connecting element according to the invention,

Fig. 7 is a side view, partially in section of a third modified embodiment of a connecting element according to the invention,

Fig. 8 is a top view showing some teeth of the connecting element according to Fig. 7,

Fig. 9 is a section along line IX-IX in Fig. 8,

Fig. 10 is a section along line X-X in Fig. 7, and

Fig. 11 is a diagrammatic illustration, partially in section of a fourth embodiment of the invention.

Fig. 1 shows a connecting element 1 according to the invention, consisting in a female part 2, a rod 3, the length of which may vary, and a male part 4.

The female part 2 comprises a cylindrical portion 14 that is provided, near one end, with a ring-shaped flange 5. The cylindrical portion 14 is provided with a bore 6 being inwardly provided with a screw thread. In the illustrated embodiment, the bore 6 is provided with an appropriate screw thread with a determined pitch. The screw thread is preferably of a type being also convenient for a use in combination with parts having a standard screw thread. The other end of the cylindrical portion 14 is conical and forms thereby a passage and a connection towards the rod 3.

In the embodiment shown in Fig. 2, the rod 3 has a cross-shaped section, but the rod 3 may obviously have different shapes. The most important is that the rod 3 should form a spacer between the male part 4 and the female part 2 and should therefore be sufficiently rigid in order to be able to transfer the desired forces.

The other end of the rod 3 is connected with

the male part 4 which, in the illustrated embodiment, is made of a rod provided with a number of teeth 9. The teeth 9 are preferably specially formed with free ends extending in the direction of the female part 14.

In substance the teeth 9 can be shaped as truncated cone-shaped envelopes which each time extend over the whole periphery of the rod 8. The teeth are however, so to speak, preferably made with cone-shaped envelopes whereby, seen in the periphery direction, a portion of the truncated cone-shaped envelopes is repeatedly cut off at regular distances or, as shown in Fig. 3, only two teeth facing each other still remain.

In order to be able to press the male part 4 with a small force onto the appropriate screw thread in the female part 14, the teeth 9 are elastically distorted and should therefore have a low wall thickness 7, which is at the cost of the authorised connecting force. When loaded, the teeth 9 are prone to bend out, but due to the tooth shape shown in Fig. 4, bending out is recovered at 12 by the lower tooth whereby the authorised bending force becomes approximately four times greater. In order to prevent the rod 8 from bending, two active teeth are positioned in Fig. 4 approximately at the same height.

Fig. 5 shows how by means of connecting elements 1, in which the male part has truncated cone-shaped envelopes, different parts of a construction, for instance building elements as disclosed in the Patent Application WO-A-98 48 126, can be connected together. Fig. 5 schematically illustrates two parts 20 and 21, wherein part 20 is provided with at least two continuous bores 22 and 23 and part 21 is provided with a continuous bore 24. The bores 22, 23 and 24, near the end illustrated in Fig. 2 as above, are provided with a part 25, 26, 27 with a larger diameter in which the flange 5 of a connecting element 1 can be incorporated

that can thereby lie against thus formed edges 28, 29 and 30. The diameter of bores 22, 23 and 24 is mainly equal to the inner diameter of the connecting element so that it can be slid inside with a small spacing.

In order to connect part 21 with part 20, it should be proceeded as follows. Let suppose that a connecting element 1 is mounted in the bore 22 wherein the other end of the male part 4 is anchored in any way, either on a (not shown) construction part or on a foundation.

A part 21 is put on the part 20 in such a way that the bore 24 lies in the extension of the bore 22. In the illustrated embodiment, parts 21 and 22 are provided with projections 30, 31 and 32 which fit into the parts 25, 26 and 27 with a larger diameter. This facilitates the positioning of parts 21 and 22 relative to one another, but is not necessary.

After the parts 21 and 22 are thus mounted on each other, a connecting element 1 is pushed through the bore 24 until the male part 4 thereof lies on the female part 2 of the connecting element 1 belonging to the part 20.

The male part 4 is subsequently slightly pressed into the female part 1, which leads to a temporary elastic distortion of the teeth 9, until the tooth 5 of the connecting element 1 belonging to the part 21 lies against the edge 30. Applying the necessary light force is done by hand.

Fig. 4 shows that, when using a number of independent teeth 9 on the male part 4, it is possible to position the connecting element 1 very accurately in axial direction. When for example two teeth 9 per level are provided, it is possible to shift the anchorage at 6 levels each time over a distance with a third pitch when further pushing the one connecting element in the other connecting element. If desired, the connection

can be further attracted by screwing the male part further inside the female part.

It is possible at any time to release the connection between two connecting elements 1. This can be done by unscrewing, as in a common bolt and nut connection. The flange 5 may be therefor provided with a groove for a screw driver, or as illustrated in Fig. 1, with two openings 10 allowing to shift the element with the help of a special tool or with a screw driver being engaged onto/into the lower part of the bore 6.

Fig. 6 shows a modified embodiment of a connecting element according to the invention, with a construction part 40 which can essentially be equal to the construction parts shown in Fig. 5.

The connecting element 41 also comprises a male part 42 and a female part 43. The male part 42 comprises a bushing 43 provided with an external screw thread ending with a flange 44 having the same function as the flange 5 of the connecting element 1. On the other side of the flange 44, two strips 45 extend, which are provided, near their free end, with an inwardly oriented edge 46 which, as shown in section in Fig. 6, has the shape of a saw tooth. The teeth 46 may be made as parts of a circle in order to fit better with the screw thread of the male part 42.

It is obvious that when pushing the strips 45 with a slight force elastically outside, the male part 42 can be pressed into the female part 43 like the connecting element 1 in Fig. 1. The number of strips 45 should not necessarily be limited to two, but can be any desired number.

A modified embodiment of a connecting element according to the invention is shown in Fig. 7 wherein the male part can be a standard screw thread 47 in a connection comprising two elements 48 and 49, wherein

the female part 50 is housed in 49. The female part is made of a specially formed right strip 51 with, at regular distances, teeth 52 as globally shown in Fig. 8 with a section according to IX-IX in Fig. 9.

When spirally winding this strip 51 as a screw and optionally linking it, for example, with glue, the female part 50 in Fig. 7 is created in which the teeth may be engaged into the screw thread of bolt 47 according to the description of Figs. 1 and 4. The section of the spiral-shaped female part 50 is illustrated in section on XII-XII line in Fig. 12. The strip 51 can also be provided opposite the teeth 52 with a screw thread shaped tooth 53 so that the female part can be screwed in a bore with a corresponding screw thread. Instead of the tooth 53, teeth 54 may also be provided which are shown in dashes in Fig. 12 and which can be fixed in a bore, provided or not with grooves. The screw thread 47 may be a part of a screw bolt to connect two elements, but may also be some sort of an eye bolt in which an eccentric 56 is inserted through the eye 55, which eccentric is rotatable in a yoke 58 and can be locked with a screw 57 so that, when rotating the eccentric 56 with a box spanner, the connection between the elements 48 and 49 may be secured after the eye bolt has been stuck into the female part and thereby creates an "out of sight" connection.

Fig. 11 shows an alternative for an "out of sight" connection, wherein a thread end 59 is rotated into an element 60 and, when connecting with an element 61, pressed into a female part 62 being preferably consisting in an elastic metal bushing with inserted teeth 63 which are able to grab into the screw thread. After providing the connection, this can be secured when sticking into the keyway 64.

CLAIMS

1. A system for connecting releasingly two elements with each other, comprising a rod shaped product with a male part and a female part with a round section, wherein this product is integral or connectable with each element, wherein one of the parts, the male or female part, is provided with a screw thread and the other part is provided with at least one protruding tooth, which, when the male and female parts are fit into each other, is engaged into the screw thread, characterized in that at least the part provided with the protruding tooth comprises a strip extending in the longitudinal direction of the part on which the protruding tooth is arranged, in such a way that, when the male and female parts are being pressed into each other, the tooth may be pressed through an elastic distortion axially onto the screw thread, and in that the tooth shape and the screw thread are chosen in such a way that an axial movement in the opposite direction is prevented.

2. A system according to claim 1, characterized in that the product comprises both a male part and a female part.

3. A system according to claim 1 or 2, characterized in that a number of teeth is present which are rotationally symmetric relative to the axial axis of the part to which they belong.

4. A system according to any one of claims 1-3, characterized in that the screw thread has the shape of a saw tooth.

5. A system according to any one of claims 1-4, characterized in that the screw thread is with a two or three pitch.

6. A system according to any one of claims 1-4, characterized in that the screw thread is of one

pitch and is convenient for use with a part with a standard screw thread.

7. A system according to any one of preceding claims, wherein each element is provided with at least one continuous bore and the elements are connected together in such a way that a continuous bore of the one element lies in the extension of a continuous bore on the other element and wherein, in each continuous bore, near one end, a portion having a larger section is present, creating a flange, characterized in that the elements may be connected by means of a rod shaped part with a flange, fit into the continuous bore and in that the ends are manufactured as male and female parts according to claim 1.

8. An auxiliary item for fixing the rod shaped part of the system according to claim 1 in a continuous bore of one element according to claim 5, characterized in that the auxiliary item has a larger section than the continuous bore section in the element and is provided with a male part and a female part according to the system in claim 1.

9. A system according to any one of claims 1-3, characterized in that the female part is made of a spiral wound strip with elastic teeth oriented towards the core.

10. A system according to claim 9, characterized in that the strip has such a shape that, when the strip is wound spirally, the upper part is engaged into the winding lying above.

11. A system according to claim 9 or 10, characterized in that a screw thread, preferably having standard dimensions, is formed at the outer side of the female part.

12. A system according to claim 9 or 10, characterized in that, at the outer side of the female part, teeth are arranged which work as the teeth inside

the spiral, but axially blocking in the opposite direction.

13. A system according to any one of claims 1-3, characterized in that the female part is made of a bushing with teeth oriented towards the bushing core.

14. A system according to any one of the preceding claims, characterized in that the connection lies out of sight.

15. A system according to any one of the preceding claims, characterized in that the connection can be secured by an eccentric or a keyway.

16. A system according to any of claims 1 to 3 and 9 and 10, characterized in that the active teeth are supported against bending by adjacent teeth.

17. A system according to claim 1, characterized in that the tooth mutual distance is chosen so that some teeth actively support upon an axial movement of a part of the pitch of the screw thread.

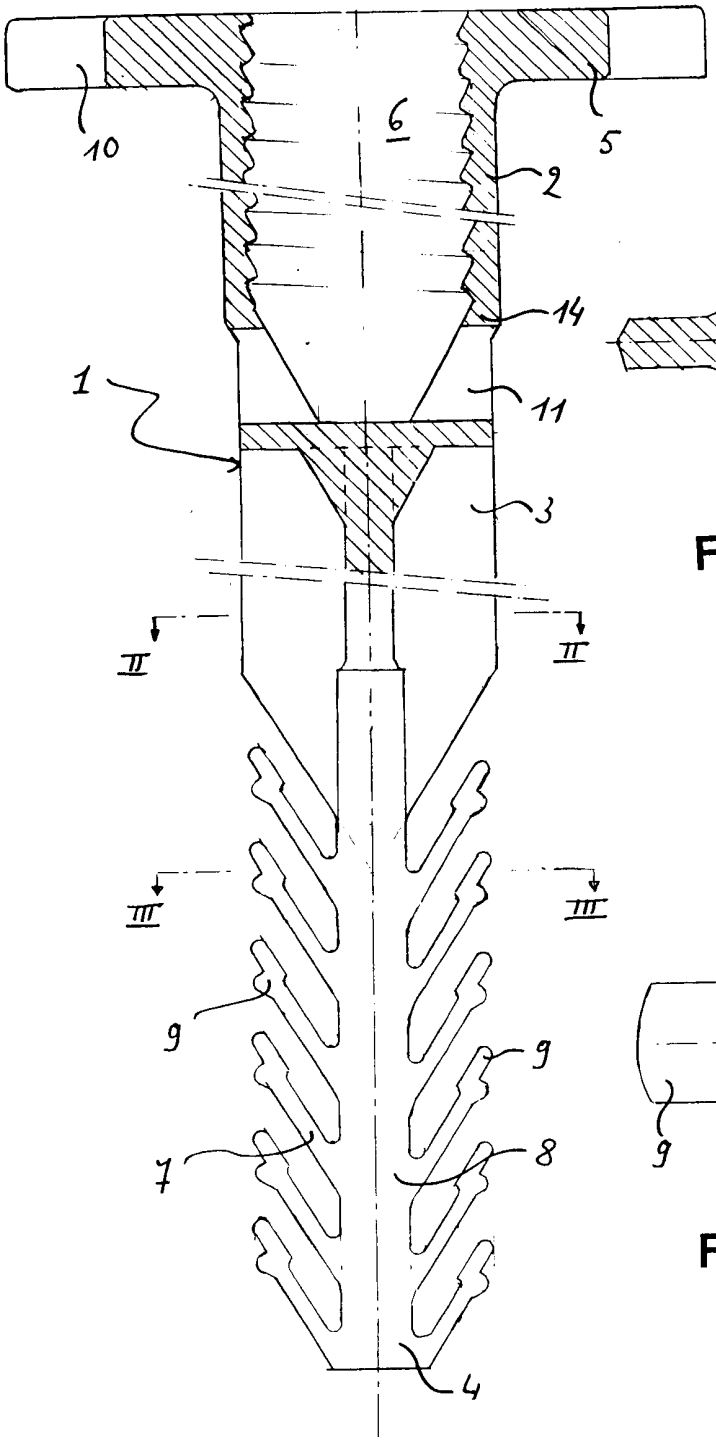

Fig. 1

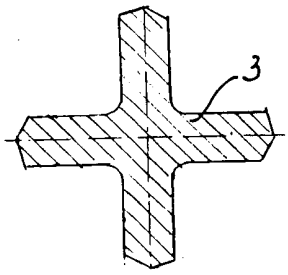

Fig. 2

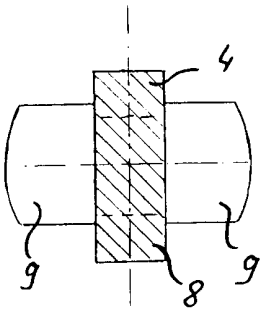

Fig. 3

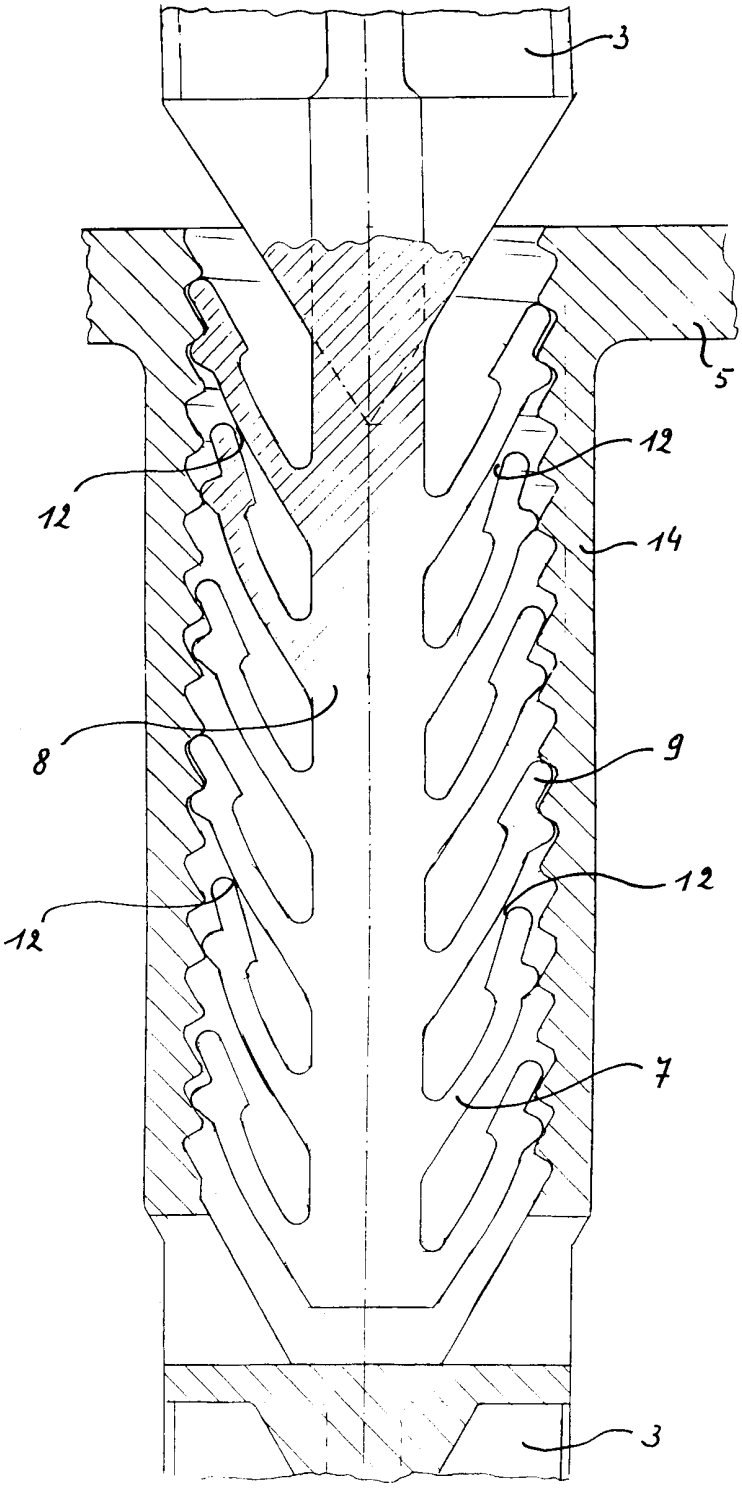

Fig. 4

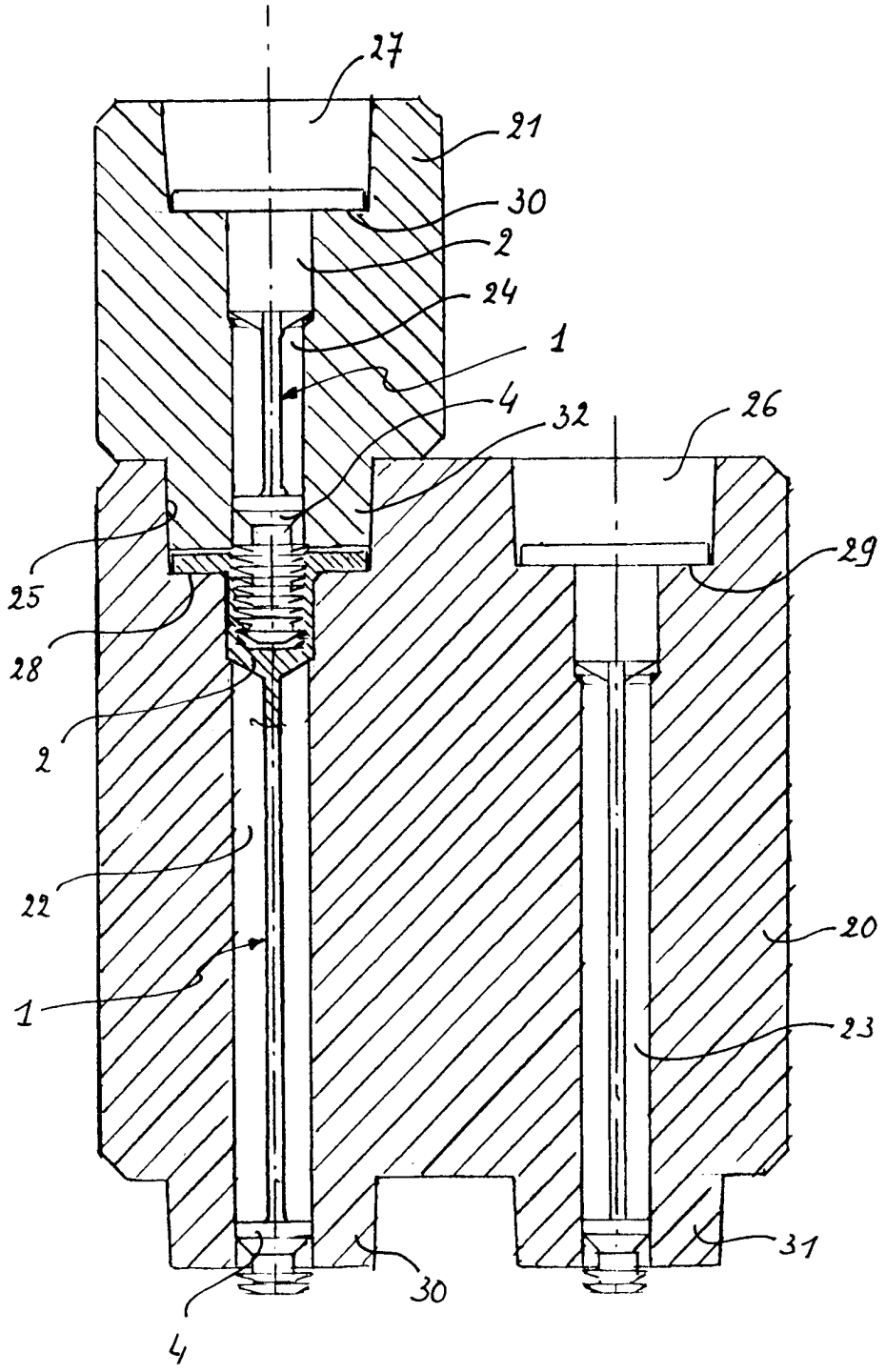

Fig. 5

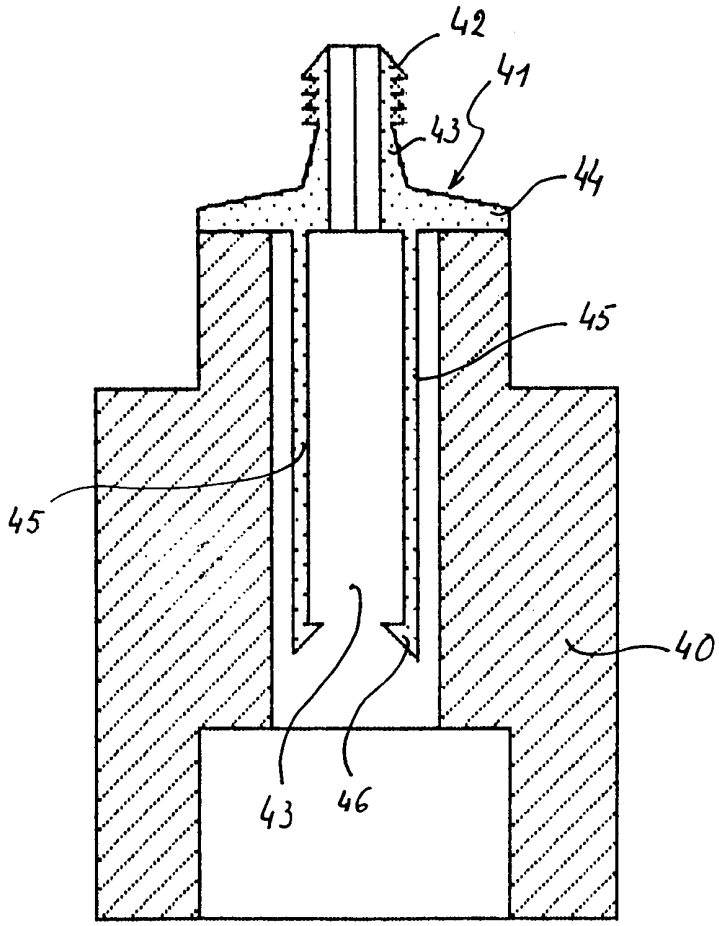

Fig. 6

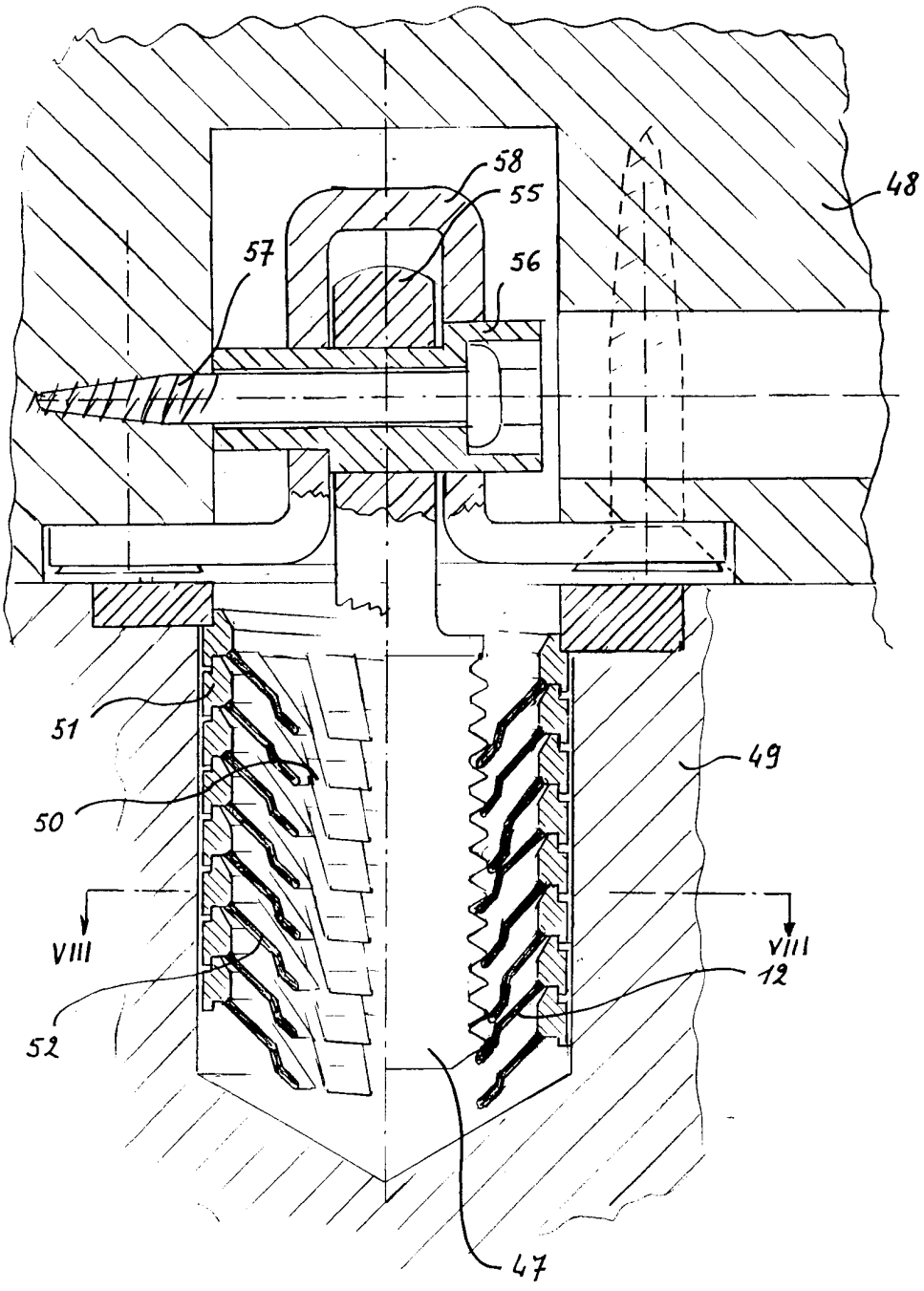

Fig. 7

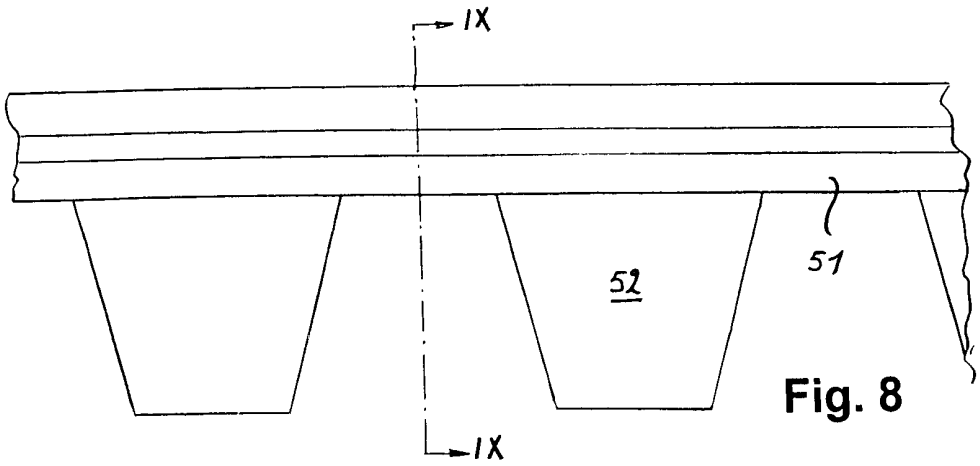

Fig. 8

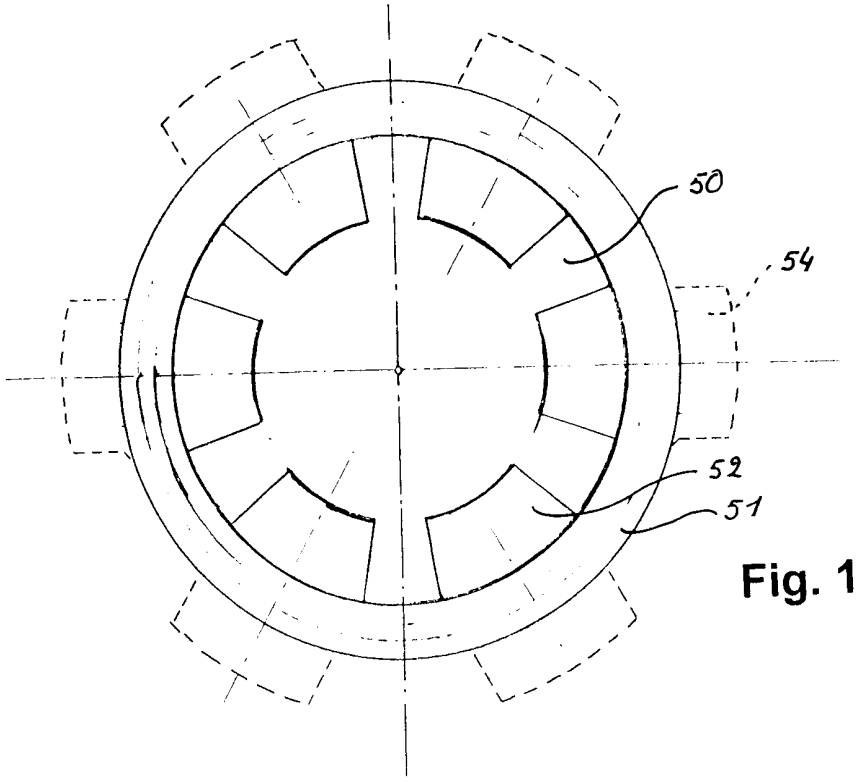

Fig. 10

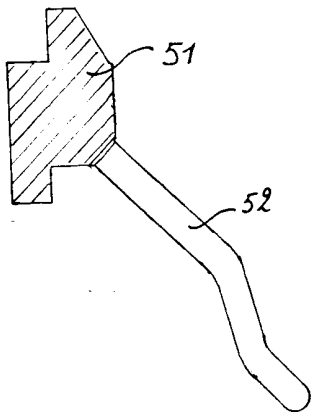

Fig. 9

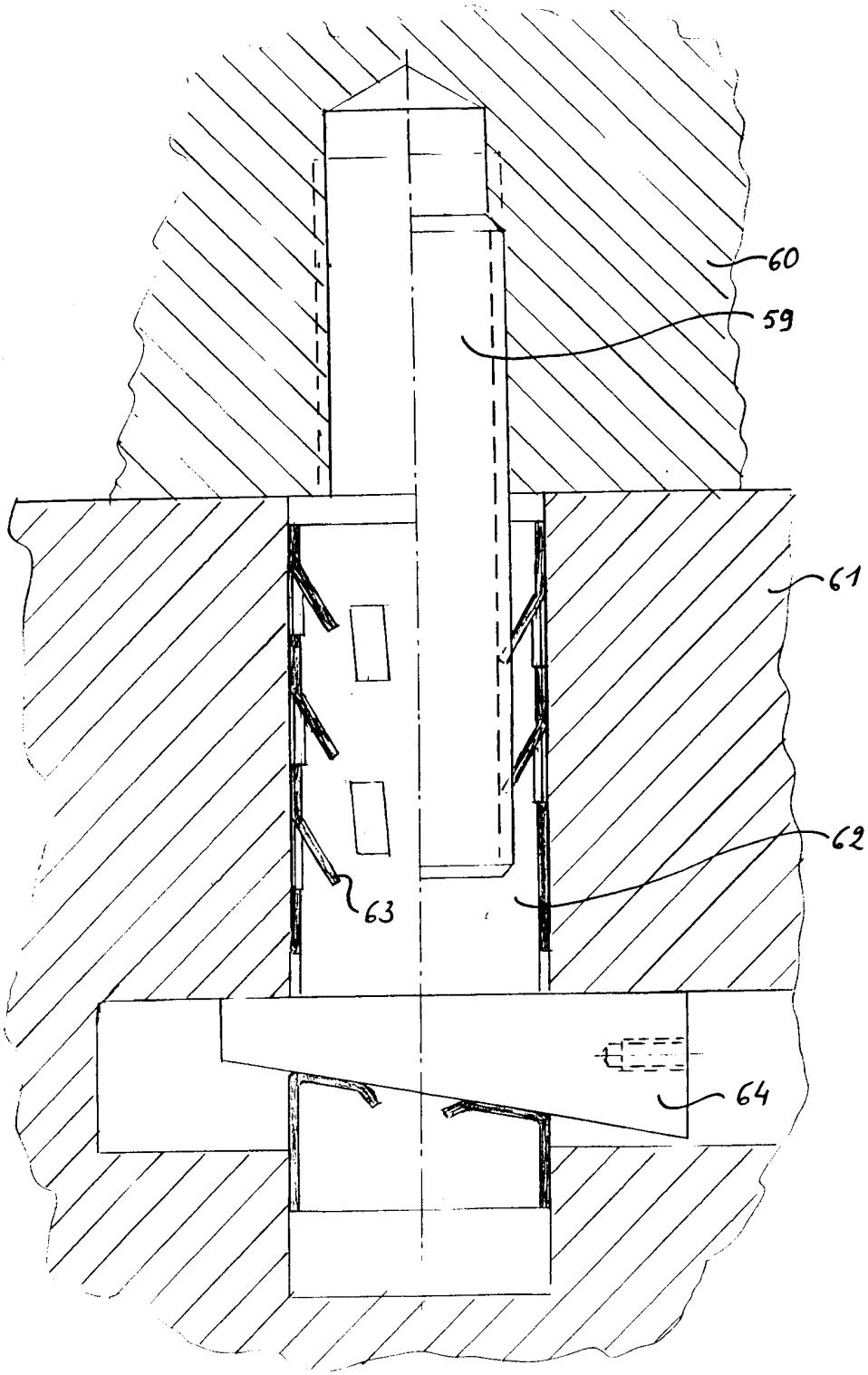

Fig. 11

INTERNATIONAL SEARCH REPORT

Int. ational Application No
PCT/EP 01/00616

A. CLASSIFICATION OF SUBJECT MATTER
IPC 7 E04B2/08 F16B21/08 F16B37/08 F16B37/12

According to International Patent Classification (IPC) or to both national classification and IPC

B. FIELDS SEARCHED

Minimum documentation searched (classification system followed by classification symbols)
IPC 7 E04B F16B

Documentation searched other than minimum documentation to the extent that such documents are included in the fields searched

Electronic data base consulted during the international search (name of data base and, where practical, search terms used)
EPO-Internal

C. DOCUMENTS CONSIDERED TO BE RELEVANT

Category °	Citation of document, with indication, where appropriate, of the relevant passages	Relevant to claim No.
Y	WO 98 48126 A (HEIJDEN FRANCISCUS ANTONIUS MA) 29 October 1998 (1998-10-29) cited in the application page 4, paragraph 22 -page 5, paragraph 7 figures 3,4	1-4,6,7, 13-15,17
A	---	8
Y	FR 912 009 A (A. BUELER) 26 July 1946 (1946-07-26) page 1, line 18-34 page 2, line 11-18 figures 1,2,4,6,8	1-4,6,7, 13-15,17
A	--- US 5 868 537 A (DORN PAUL J ET AL) 9 February 1999 (1999-02-09) claim 8 figure 1	1-3,17
	--- -/--	

[X] Further documents are listed in the continuation of box C.

[X] Patent family members are listed in annex.

° Special categories of cited documents :

"A" document defining the general state of the art which is not considered to be of particular relevance

"E" earlier document but published on or after the international filing date

"L" document which may throw doubts on priority claim(s) or which is cited to establish the publication date of another citation or other special reason (as specified)

"O" document referring to an oral disclosure, use, exhibition or other means

"P" document published prior to the international filing date but later than the priority date claimed

"T" later document published after the international filing date or priority date and not in conflict with the application but cited to understand the principle or theory underlying the invention

"X" document of particular relevance; the claimed invention cannot be considered novel or cannot be considered to involve an inventive step when the document is taken alone

"Y" document of particular relevance; the claimed invention cannot be considered to involve an inventive step when the document is combined with one or more other such documents, such combination being obvious to a person skilled in the art.

"&" document member of the same patent family

Date of the actual completion of the international search	Date of mailing of the international search report
22 May 2001	05/06/2001

Name and mailing address of the ISA	Authorized officer
European Patent Office, P.B. 5818 Patentlaan 2 NL - 2280 HV Rijswijk Tel. (+31-70) 340-2040, Tx. 31 651 epo nl, Fax: (+31-70) 340-3016	Van Wel, O

1

Form PCT/ISA/210 (second sheet) (July 1992)

INTERNATIONAL SEARCH REPORT

International Application No
PCT/EP 01/00616

C.(Continuation) DOCUMENTS CONSIDERED TO BE RELEVANT

Category °	Citation of document, with indication,where appropriate, of the relevant passages	Relevant to claim No.
A	US 3 466 966 A (BROWN MARTIN M) 16 September 1969 (1969-09-16) column 2, line 56 -column 3, line 33 figures 1,2	1,6,17
A	US 2 390 514 A (H.W. CRAM) 11 December 1945 (1945-12-11) column 2, line 6-14 column 2, line 43-53 figures 1,4-6	9-12
A	US 2 566 593 A (S. BLOOMFIELD) 4 September 1951 (1951-09-04) column 2, line 6-11 figures 3,5	16

1

INTERNATIONAL SEARCH REPORT

Information on patent family members

Inte. ational Application No
PCT/EP 01/00616

Patent document cited in search report	Publication date	Patent family member(s)	Publication date
WO 9848126 A	29-10-1998	NL 1005850 C	27-10-1998
		AU 7524098 A	13-11-1998
		BR 9808609 A	23-05-2000
		CN 1252848 T	10-05-2000
		EP 0991826 A	12-04-2000
		HU 0001932 A	28-10-2000
		PL 336503 A	03-07-2000
		TR 9902476 T	21-01-2000
FR 912009 A		NONE	
US 5868537 A	09-02-1999	NONE	
US 3466966 A	16-09-1969	NONE	
US 2390514 A	11-12-1945	BE 460113 A	
		CH 254044 A	15-04-1948
		GB 591021 A	05-08-1947
US 2566593 A	04-09-1951	NONE	