E. J. PETTEGREW.

RAILWAY RAIL FASTENER.

APPLICATION FILED DEC. 2, 1912.

1,068,697.

Patented July 29, 1913.

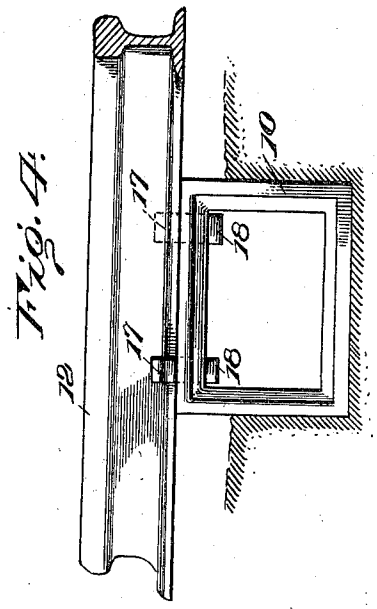

Fig. 4.

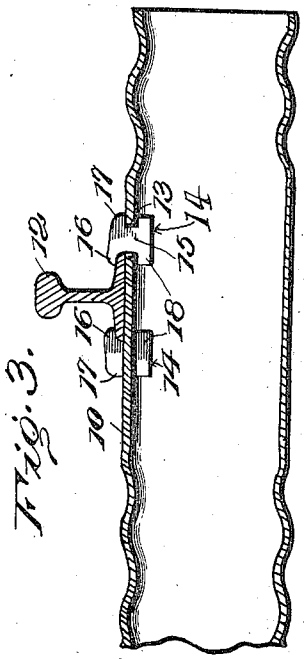

Fig. 3.

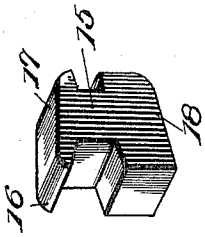

Fig. 5.

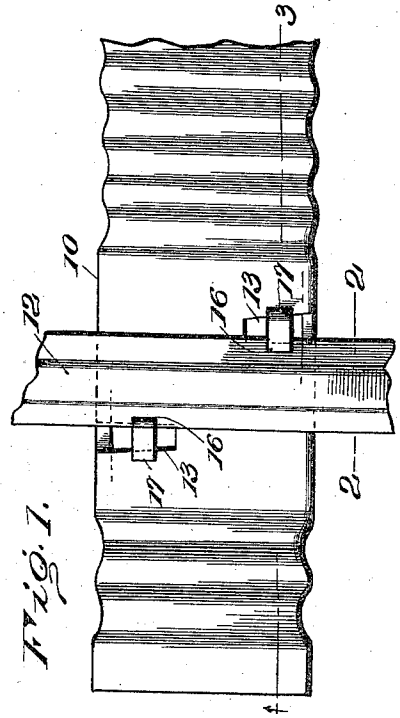

Fig. 1.

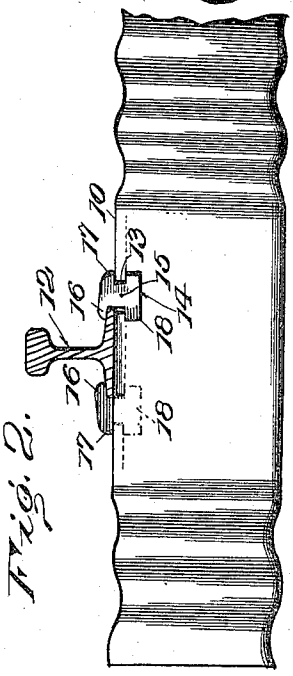

Fig. 2.

Witnesses

Inventor

E. J. Pettegrew.

By

Attorneys.

COLUMBIA PLANOGRAPH CO., WASHINGTON, D. C.

UNITED STATES PATENT OFFICE.

ERNEST J. PETTEGREW, OF WAYSIDE, NEBRASKA.

RAILWAY-RAIL FASTENER.

1,068,697. Specification of Letters Patent. Patented July 29, 1913.

Original application filed July 15, 1912, Serial No. 709,601. Divided and this application filed December 2, 1912. Serial No. 734,563.

To all whom it may concern:

Be it known that I, ERNEST J. PETTEGREW, citizen of the United States, residing at Wayside, in the county of Dawes and State of Nebraska, have invented certain new and useful Improvements in Railway-Rail Fasteners, of which the following is a specification.

This is a division of my application filed July 15, 1912, Serial No. 709,601.

This invention relates to improvements in railway rail fasteners and has for one of its objects to improve the construction and increase the efficiency and utility of devices of this character.

Another object of the invention is to provide a simply constructed device whereby the rails are secured to the ties without the necessity for employing clamping bolts or like devices.

Another object of the invention is to provide a simply constructed rail fastening device whereby any slack or looseness which may be produced between the tie and the rail may be corrected without detaching the parts.

With these and other objects in view the invention consists in certain novel features of construction as hereinafter shown and described and then specifically pointed out in the claims, and in the drawings illustrative of the preferred embodiment of the invention, Figure 1 is a plan view of a portion of a rail and a portion of a tie with the improved fastening means applied. Fig. 2 is a side elevation of the parts shown in Fig. 1 with the rail in transverse section on the line 2—2 of Fig. 1. Fig. 3 is a longitudinal section on the line 3—3 of Fig. 1. Fig. 4 is an end elevation. Fig. 5 is an enlarged perspective view of one of the rail holding devices.

Corresponding and like parts are referred to in the following description and indicated in all the views of the drawings by the same reference characters.

The improved tie is constructed preferably tubular and of metal and of the usual exterior dimensions corresponding to the ordinary railway tie.

The tie is represented as a whole at 10 and is formed in the upper face at the points where the rails, indicated conventionally at 12, are located, of inwardly directed slots 13, the slots opening outwardly through the upper wall of the tie and likewise through the side walls and extending for a distance downwardly in the latter with the portions of the slots which are located in the side walls of the tie enlarged laterally, as shown at 14. By this means the portions of the slots which are located in the side walls of the tie are T-shaped or under cut as shown.

The portions of the slots which are located in the upper walls of the tie slightly converge toward their inner ends, or with the edge farthest from the rail inclined. The adjacent edges of each pair of slots are spaced apart a distance slightly less than the width of the flange of the rail so that the rails slightly overhang the slots of each side.

Fitting in each of the slots is a key or locking member which is formed with an intermediate body portion 15 which corresponds substantially in width to the portion of the slot which is located in the upper wall of the tie and with a lip 16 conforming to and adapted to engage over the outer edge of the flange of the rail and with another overhanging lip 17 at the opposite side and bearing over the adjacent upper face of the tie. At its lower end the stock 10 is formed with a T portion 18 to pass through the T portion 14 of the slot and to bear beneath the lower face of the upper wall of the tie. By this means the key may be entered into the slot and driven home into the inclined portion of the same and thus firmly clamp the rail to the tie. It will thus be noted that the keys not only firmly clamp the rail to the tie, but likewise enable the tie to be tightened in case it works loose under the impact of the rolling stock or from other causes.

By this simple device the necessity for employing clamp bolts or other similar fastening devices is obviated, as the rails are firmly clamped in position upon the tie and may be tightened in event of working loose.

The improved tie is simple in construction, inexpensive to manufacture, and operates effectually for the purpose as described.

Having thus described the invention, what I claim is:

1. A tubular metallic railway tie having transverse slots in its upper wall opening outwardly and with slots in its side walls communicating with the slots of the upper wall, the lower portions of the slots of the

side walls being of greater width than the upper portions and the upper portions of the slots of the side walls corresponding in width to the outer ends of the slots of the upper wall and overhanging the wider lower portions thereof, and clamp devices engaged in said slots and T-shaped at the lower ends to enable them to pass through the wider portions of the slots of the side walls and with rail engaging lips at their upper ends.

2. A railway tie having transverse slots in its upper wall at opposite sides thereof and spaced apart a distance slightly less than the width of a rail flange, the confronting edges of the slots extending in parallel relations and the outer edges of the slots converging from the outer edges of the ties and with slots in the side walls communicating with the slots of the upper wall, the lower portions of the slots of the side walls being wider than the slots of the upper wall and the upper portions of the slots of the side walls corresponding in width to the slots of the upper wall and overhanging the lower portion, and fastening devices each comprising an intermediate stock for engaging respectively in the slots of the upper wall and enlarged at the lower ends to pass through the enlarged lower ends of the side wall slots and to bear beneath the upper wall at its lower side and enlarged at the upper ends to engage over a rail flange and the upper face of the tie, said stock engaging against the converging edges of the slots of the upper wall and adapted to compress the same against a rail flange.

3. A tubular metallic railway tie having transverse slots in the opposite sides of its upper wall and opening outwardly and with slots in its side walls communicating with the slots of the upper wall, the slots in the upper wall being spaced apart at a less distance than the width of a flange of a railway rail with their contiguous edges extending in parallel relations and the outer edges converging inwardly and the lower portions of the slots of the side walls of greater width than the upper portions and the upper portions of the slots of the side walls corresponding in width to the outer ends of the slots of the upper walls and overhanging the wider lower portions thereof, and clamp devices engaging in said slots and T-shaped at the lower ends to enable them to pass through the wider portion of the slots of the side walls, the upper portions of the clamp devices having a rail engaging lip at one side and a tie engaging lip at the other side.

In testimony whereof I affix my signature in presence of two witnesses.

ERNEST J. PETTEGREW. [L. s.]

Witnesses:
JAMES E. BEAL,
J H. GLENN.

Copies of this patent may be obtained for five cents each, by addressing the "Commissioner of Patents, Washington, D. C."