(No Model.) 2 Sheets—Sheet 1.

J. P. GERAGHTY.

CAR FENDER.

No. 557,262. Patented Mar. 31, 1896.

Fig 1

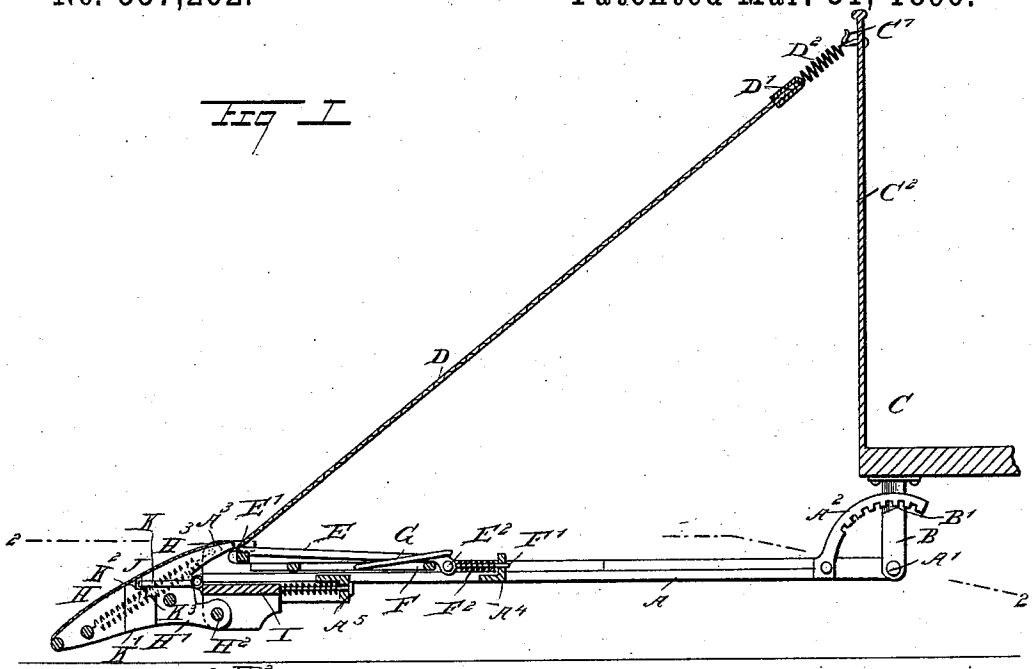

Fig 2

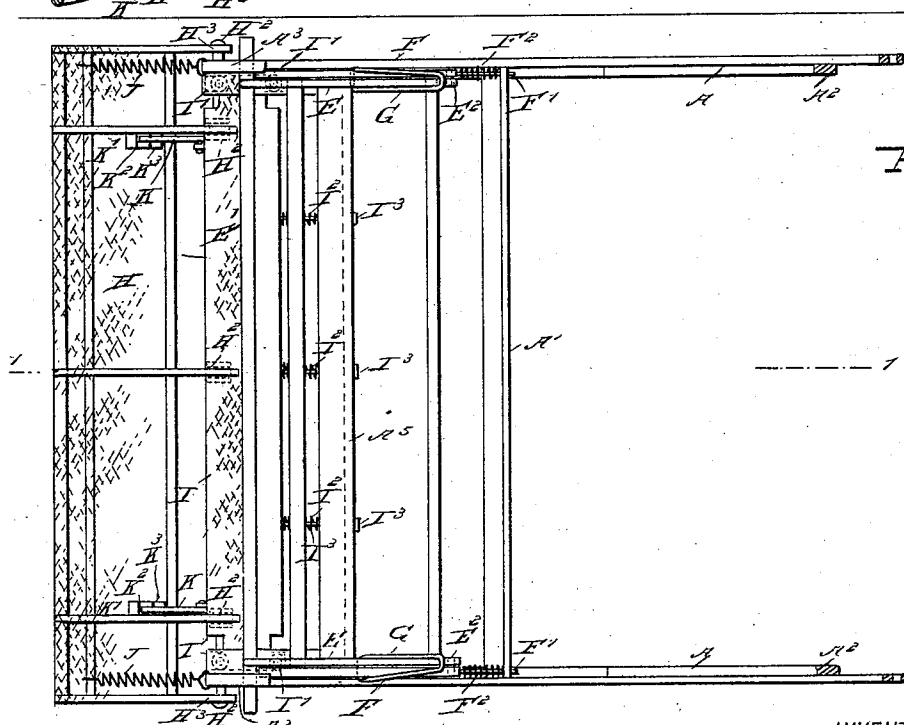

WITNESSES:

H. Walker

Thos. G. Hoster

INVENTOR

J. P. Geraghty

BY

Munn & Co

ATTORNEYS.

ANDREW B. GRAHAM, PHOTO-LITHO. WASHINGTON, D.C.

(No Model.) 2 Sheets—Sheet 2.

J. P. GERAGHTY.

CAR FENDER.

No. 557,262. Patented Mar. 31, 1896.

Fig 3

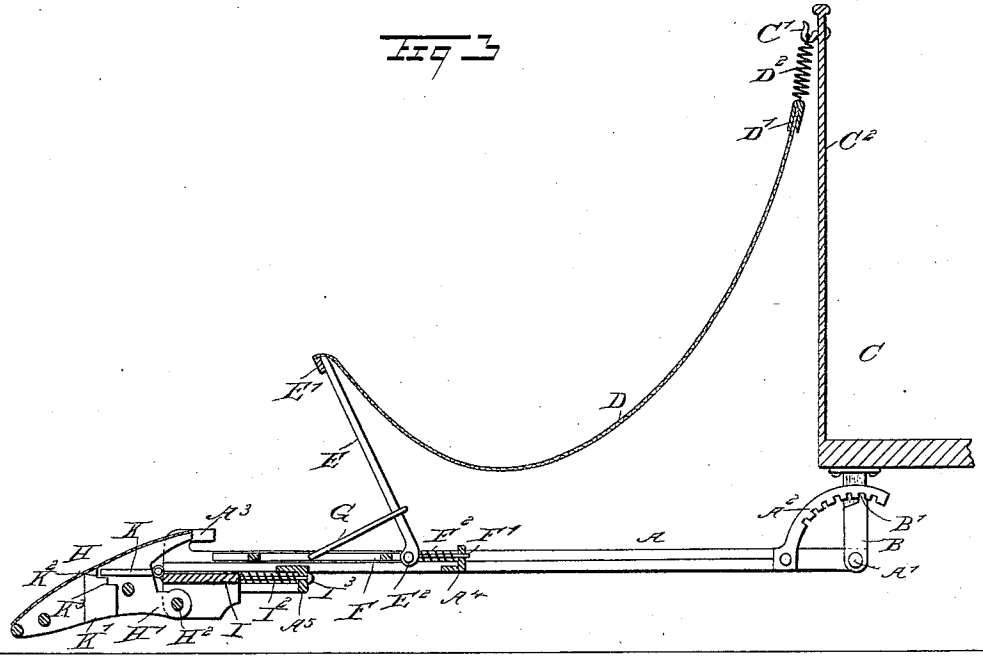

Fig 4

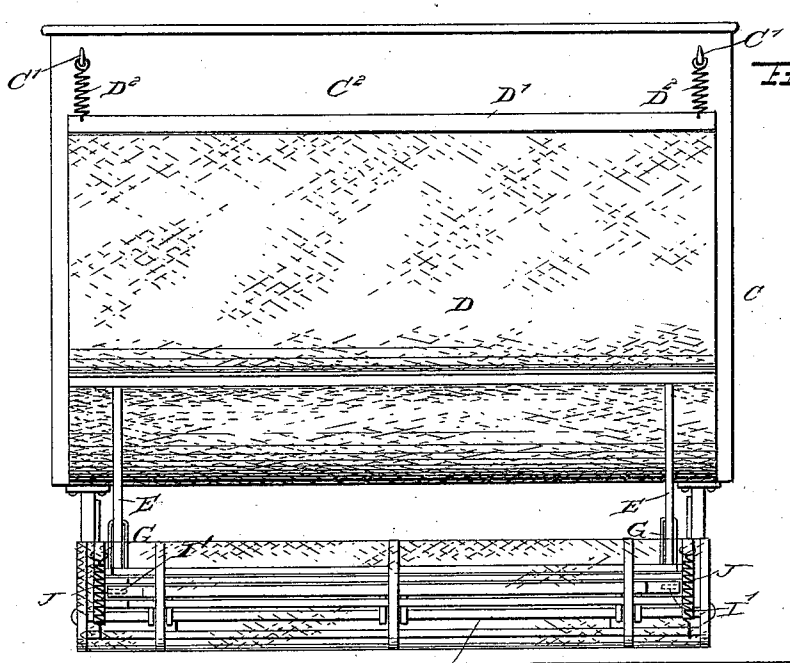

WITNESSES:

H. Walker

Theo. G. Hoster

INVENTOR

J. P. Geraghty

BY

Munn & Co

ATTORNEYS.

ANDREW B. GRAHAM, PHOTO-LITHO. WASHINGTON, D.C.

UNITED STATES PATENT OFFICE.

JOHN P. GERAGHTY, OF JERSEY CITY, NEW JERSEY.

CAR-FENDER.

SPECIFICATION forming part of Letters Patent No. 557,262, dated March 31, 1896.

Application filed June 11, 1895. Serial No. 552,470. (No model.)

To all whom it may concern:

Be it known that I, JOHN PARKER GERAGHTY, of Jersey City, in the county of Hudson and State of New Jersey, have invented a new and Improved Car-Fender, of which the following is a full, clear, and exact description.

The object of the invention is to provide a new and improved car-fender which is simple and durable in construction and arranged to readily pick up and safely retain a person or obstruction in the path of a car when struck by the car-fender.

The invention consists principally of an apron extending in an inclined direction, and attached at its upper end to a fixed support and at its lower end to the free end of pivoted arms, so that the apron is normally in a stretched position, and when a person passes upon the apron then the arms swing upward to form a scoop.

The invention also consists of certain parts and details and combinations of the same, as will be fully described hereinafter, and then pointed out in the claims.

Reference is to be had to the accompanying drawings, forming a part of this specification, in which similar characters of reference indicate corresponding parts in all the figures.

Figure 1 is a sectional side elevation of the improvement on the line 1 1 of Fig. 2. Fig. 2 is a sectional plan view of the same on the line 2 2 of Fig. 1. Fig. 3 is a sectional side elevation of the improvement with the parts in a different position, and Fig. 4 is an end elevation of the improvement.

An open main frame A is pivotally connected at its rear end at A′ to a bracket B secured to the under side of the platform of the car C, as is plainly shown in the drawings. On each bracket B is formed a projection B′ engaged by one of a series of teeth in a segment A^2 attached to the side arms of the open frame A, so that the latter can be held either in a horizontal position or in an upwardly or rearwardly inclined position, according to the form of the track. By the arrangement described the open frame A is, however, held rigidly in position and projects in front of the car, as indicated in the drawings.

An apron D, made of a suitable material, fabric, wire-netting or the like, is stretched normally above the open frame A in an inclined position, as illustrated in Fig. 1, and the upper edge of the said apron D is provided with a coupling D′, on which are secured a number of coil-springs D^2 hung on hooks C′ attached to the upper end of the dashboard C^2 of the car. The lower end of the apron D is rigidly secured to a cross pin or bar E′ connecting the side arms E with each other, the said side arms extending rearwardly to be pivotally connected at E^2 with a light frame F fitted to slide on the frame A.

The frame F is provided with rearwardly-extending pins or rods F′ having bearings in a cross-bar A^4 forming part of the frame A. Springs F^2 are coiled on the rods F′ to rest with their inner ends on the cross-bar A^4 and at their outer ends on the frame F, so that the latter is yieldingly mounted in the frame A.

The cross-bar E′ of the pivoted arms E is normally under projecting lugs A^3 formed on the front end of the frame A, so that the apron D remains in a stretched position, as shown in Fig. 1, until a person or other obstruction passes into the apron and thereby causes a rearward pull on the pivoted arms E fulcrumed on the yieldingly-mounted frame F, whereby the latter slides rearwardly and the cross-bar E′ moves from under the lugs A^3, so that the arms E swing upward into the inclined position shown in Fig. 3. The upward swinging motion of the pivoted arms E is limited by links G fulcrumed on the frame F, as is plainly indicated in the drawings, with special reference to Fig. 3.

On the front end of the frame A is arranged a platform H, made in the form of an open framework, covered with netting and extending with its front edge close to the track, without, however, touching the same. This platform H is provided with rearwardly-extending lugs H′, pivotally connected at H^2 to a transverse plate I, provided at its ends with friction-rollers I′ traveling in suitable tracks or bearings in the side bars of the frame A.

The plate I is held in a forward position by springs I^2, coiled on rods I^3 held in a cross-bar A^5 forming part of the frame A. Now it will be seen that by this arrangement the plate I is yieldingly mounted in the frame A, and consequently the platform H is free to move on its pivots on the said plate I, and also move with the latter.

Springs J are connected with the platform H and with the side bars of the platform A to hold the said platform H in a normal position, as shown in the drawings, the said platform, as previously mentioned, extending downwardly from the front end of the frame A a sufficient distance to prevent a person or obstruction from passing under the platform and under the car.

On the plate I are pivoted the gravity-locking bars K extending forwardly and resting with their free ends on the lugs K′ secured to the plaform H and each having two steps or shoulders K^2 K^3, of which the shoulder K^2 is engaged by the bar K when the platform is in normal position. The bar thus forms a stop for the platform to prevent the latter from swinging upward when striking an object in the path of the fender. Now when this takes place the platform H swings downward and the bars K engage the second shoulders K^3 to lock the platform into a lower position.

The platform H is provided at its upper rear end with rearwardly-extending arms or lugs H^3 reaching over the front end of the apron D, so that when a person or obstruction is struck by the platform H then the latter swings downwardly a short distance, so that the arms H^3 positively pass over the front end of the apron D at the bar E′ to lock the latter in position under the lugs A^3 until the person or obstruction falls from the platform H upon the apron D, whereby the platform H is relieved of the weight, and the latter swings back to its normal position by the action of the springs J, and at the same time, the weight passing upon the apron, causes a rearward pull on the arms E, as previously described, to release the cross-bar from the lugs A^3 and permit the arms to swing upward to form a scoop of the apron D. Thus a person falling upon the apron is safely retained thereon, owing to the peculiar form the apron assumes.

Having thus fully described my invention, I claim as new and desire to secure by Letters Patent—

1. A car-fender, comprising a main frame supported from the car, a yieldingly-mounted frame fitted to slide on the main frame, side arms pivoted at their rear ends on the yieldingly-mounted frame, and an apron attached at its upper end to a fixed support and at its lower end to the said pivoted arms, substantially as shown and described.

2. A car-fender, comprising a main frame supported from the car, a yieldingly-mounted frame fitted to slide on the said main frame, arms pivoted on the said yieldingly-mounted frame, and an apron attached at its upper end to a fixed support and at its lower end to the said pivoted arms, the said arms having a cross-bar normally locked under the lugs of the said main frame, substantially as shown and described.

3. A car-fender, comprising a main frame, a yieldingly-mounted frame fitted to slide on the main frame, arms pivoted on the yieldingly-mounted frame, an apron attached at its upper end to a fixed support and at its lower end to the said pivoted arms, and links connected with the yieldingly-mounted frame for limiting the upward swinging motion of the said pivoted arms, substantially as described.

4. A car-fender, comprising a main frame supported from the car, a transverse plate yieldingly mounted at the forward end of the main frame and provided with friction-rollers adapted to travel in suitable tracks or bearings on the said main frame, a platform pivotally connected to the said transverse plate, and springs connected with the said platform and attached to the said main frame, substantially as shown and described.

5. A car-fender, provided with a plate mounted to slide, a platform fulcrumed on the said plate and a locking-bar on the said plate and adapted to engage a stepped lug in the said platform, substantially as shown and described.

6. A car-fender, comprising a main frame, a plate mounted to slide thereon and pressed on by springs, a platform fulcrumed on the said plate, and springs attached to the said main frame and connected with the platform, to hold the latter in position, substantially as shown and described.

7. A car-fender, comprising a main frame, arms pivoted thereon, an apron connected at its upper end to a fixed support and at its lower end to the free ends of the arms, and a platform mounted to swing and provided with lugs adapted to pass over the free ends of the said arms, substantially as shown and described.

8. A car-fender, comprising a main frame, arms pivoted thereon, an apron connected at its upper end to a fixed support and at its lower end to the free ends of the arms, a platform mounted to swing and provided with lugs adapted to pass over the free ends of the said arms, springs for supporting the said platform from the main frame, and a plate mounted to slide in the said main frame and pressed on by springs, the said plate carrying the fulcrum for the said platform, substantially as shown and described.

9. A car-fender, comprising a main frame supported from the car and provided at its front end with projecting lugs, a yieldingly-mounted frame, fitted to slide on the said

main frame, arms pivoted on the said yieldingly-mounted frame and connected at their forward ends by a cross-bar, the said cross-bar being normally held under the lugs on the front end of the main frame, an apron connected at its upper end to a fixed support and at its lower end to the cross-bar connecting the free ends of the said arms, a plate yieldingly mounted at the forward end of the main frame and fitted to slide thereon, and a platform fulcrumed on the said plate and provided with rearwardly-extending arms or lugs, substantially as shown and described.

JOHN P. GERAGHTY.

Witnesses:
CHAS. E. GARDNER,
JOHN C. GALLAGHER.