24719/88

FORM 1

REGULATION 9

COMMONWEALTH OF AUSTRALIA

PATENTS ACT 1952

610945

APPLICATION FOR A STANDARD PATENT

We, HILTI AKTIENGESELLSCHAFT, a Corporation organised under the laws of the Principality of Liechtenstein, of Schaan, Liechtenstein, hereby apply for the grant of a Standard Patent for an invention entitled:-

"EXPANSION DOWEL"

which is described in the accompanying Complete Specification.

Details of basic application:-

Number: P37 39 608.0

Country: Federal Republic of Germany

Date: 23rd November, 1987

Our address for service is: SHELSTON WATERS
55 Clarence Street
SYDNEY, N.S.W. 2000.

DATED this 3rd Day of November, 1988

HILTI AKTIENGESELLSCHAFT

by P. Heathcote

Fellow Institute of Patent Attorneys of Australia
of SHELSTON WATERS

To: The Commissioner of Patents
WODEN A.C.T. 2606

File: D.B. H-27

Fee: $135.00

003421 04/11/88

CONVENTION APPLICATION BY A COMPANY

FORM 8 - REGULATION 12 (2)

AUSTRALIA
PATENTS ACT 1952

DECLARATION IN SUPPORT OF A CONVENTION APPLICATION FOR A PATENT

In support of the Convention Application made by

(a) HILTI AKTIENGESELLSCHAFT

FL-9494 Schaan

(hereinafter referred to as "Applicant") for a patent for an invention entitled:

(b) EXPANSION DOWEL

We ~~I~~ (c) Wilfried Imelmann

Roland Wildi

of (d) FL-9494 Schaan

Principality of Liechtenstein

do solemnly and sincerely declare as follows:

1. ~~I am~~ We are authorised by Applicant to make this declaration on its behalf.

2. The basic Application(s) as defined by section 141 of the Act was /~~were~~ made

in (e) WEST GERMANY on the 23rd day of November 19 87

by (f) HILTI AKTIENGESELLSCHAFT

in ..... on the ..... day of 19

by .....

in ..... on the ..... day of 19

by .....

in ..... on the ..... day of 19

by .....

3. (g) Peter FROEHLICH, Lerchenweg 7, D-8027 Neuried

..... is/~~are~~

the actual Inventor(s) of the invention and the facts upon which Applicant is entitled to make the Application are as follows:

Applicant is the Assignee of the Said Inventor.

4. The basic Application(s) referred to in paragraph 2 of this Declaration was/were the first Application(s) made in a Convention country in respect of the invention, the subject of the Application.

DECLARED at Schaan

this 23rd day of September 1988

HILTI AKTIENGESELLSCHAFT

(h) .....

(Signature of Declarant)

Wilfried Imelmann Roland Wildi

To THE COMMISSIONER OF PATENTS.

(a) Here insert (in full) Name of Company.

(b) Here insert Title of Invention.

(c) and (d) Here insert Full Name and Address of Company Official authorised to make declaration.

(e) Here insert Basic Country followed by date of Basic Application.

(f) Here insert Full Name(s) of Applicant(s) in Basic Country.

(g) Here insert (in full) Name and Address of actual Inventor or Inventors.

See reverse side of this form for guidance in completing this part.

(h) Personal Signature of Declarant (c) (no seal, witness or legalisation).

(12) PATENT ABRIDGMENT (11) Document No. AU-B-24719/88
(19) AUSTRALIAN PATENT OFFICE (10) Acceptance No. 610945

(54) Title
EXPANSION DOWEL

International Patent Classification(s)
(51)[4] **F16B 013/06**

(21) Application No. : **24719/88** (22) Application Date : **04.11.88**

(30) Priority Data

(31) Number	(32) Date	(33) Country
3739608	23.11.87	DE FEDERAL REPUBLIC OF GERMANY

(43) Publication Date : **25.05.89**

(44) Publication Date of Accepted Application : **30.05.91**

(71) Applicant(s)
HILTI AKTIENGESELLSCHAFT

(72) Inventor(s)
PETER FROEHLICH

(74) Attorney or Agent
SHELSTON WATERS, 55 Clarence Street, SYDNEY NSW 2000

(56) Prior Art Documents
GB 1564843
US 4112814
US 4474516

(57) Claim

1. Expansion dowel having a front and rear end and being provided with:

an expansion shell, which has longitudinal slots over part of its length starting at the front end and which exhibits a borehole, that, in the expansion region, becomes increasingly wide at the opening of the front end being the direction of setting;

and with:

an anchorbar provided with a cone of expansion such as is retractable into the expansion shell and becomes increasingly wide at its front end in the direction of setting; characterised by the joint occurrence of the following features:

a) The angle of the taper of the cone of expansion is greater than that of the borehole in the expansion shell,

b) The wall thickness of the expansion shell becomes, in the region of expansion, increasingly thinner in the

circumferential direction as it approaches the longitudinal slots,

c) The expansion shell possesses, in the region of expansion, at least one annular bulb entirely surrounding its outside circumference.

COMMONWEALTH OF AUSTRALIA 610945

FORM 10

PATENTS ACT 1952

COMPLETE SPECIFICATION

FOR OFFICE USE:

Class Int.Class

Application Number:
Lodged:

Complete Specification Lodged:
Accepted:
Published:

Priority:

Related Art:

Name of Applicant: HILTI AKTIENGESELLSCHAFT

Address of Applicant: Schaan, Liechtenstein

Actual Inventor: Peter Froehlich

Address for Service: SHELSTON WATERS, 55 Clarence Street, Sydney

Complete Specification for the Invention entitled:

"EXPANSION DOWEL"

The following statement is a full description of this invention, including the best method of performing it known to us:-

EXPANSION DOWEL

The invention refers to an expansion dowel, that is provided with an expansion shell having longitudinal slots over part of its length and exhibits a borehole of width increasing in the direction of setting and is also provided with an anchorbar, possessing a cone of expansion which becomes increasingly wide in the direction of setting and is retractable into the expansion shell.

Expansion dowels must often be fastened in tensile zones of building works, where there is a tendency to crack, e.g.on roofs or on the bottom side of beams subject to bending. Any existing cracks may open up further due to uneven loading or due to variations in temperature under load. Conventional expansion dowels, anchored by friction grip only, are not suitable for such applications, because the figure-of-merit of the anchorage might be drastically reduced due to a crack in the borehole, thus causing the fastening to fail.

For fastening in tensile zones where a risk of cracking is present, special dowels have also been applied such as possess a determined form when anchored in the base.Here, first a cut-back borehole is produced and the dowel is anchored in this borehole subsequently. These so-called cut-back tools are often very expensive and they are mostly unreliable,also. In some cases, dowels of expensive , special design have to be used.

The invention aims at creating a simple and economically produced expansion dowel for fastening purposes in tensile zones subject to a risk of cracking; a dowel that possesses high pull-out resistance and that does not require expensive, special tools for creating the borehole.

According to the invention, this is attained by combining the following features:

a) the aperture angle of the cone of expansion is greater than taht of the borehole in the expansion shell,
b) the wall-thickness of the expansion shell reduces in the expansion region successively in the peripheral direction towards the longitudinal slots,
c) the expansion shell possesses, in the region of expansion, at least one annular bulb entirely surrounding its outside circumference.

The principal effect of the aperture angle of the cone of expansion exceeding the aperture angle of the expansion shell is a strong widening of the expansion shell at the end pointing to the direction of setting at the commencement of the expansion process. Due to the widening of the expansion shell, the aperture angle of the expansion shell will gradually approximate that of the cone of expansion. When the widening reaches its maximum, the two aperture angles are equal, so that there is a close fit between the expansion shell and the cone of expansion.

As a consequence of the wall-thickness being continually reduced in the peripheral direction towards the longitudinal slots, there will be a non-uniform distribution of expansion pressure along the circumference of the expansion dowel during the expansion process. Expansion pressure is maximal in the vicinity of the greatest wall-thickness and becomes smaller towards the longitudinal slots. Thus, the expansion shell is being pressed into the base material most forcibly in the region of maximum wall-thickness. As the expansion shell widens, this will result in a polygon-shaped external contour of the expansion shell. The annular bulb, entirely surrounding the external cicumference of the expansion shell, is pressed during the widening of the expansion shell into the wall of the borehole and creates a joint of determined form between the expansion shell and the base.

As a consequence of the differing aperture angles of the cone of expansion and of the expansion shell, as well as of the continually decreasing wall-thickness in the peripheral

direction towards the longitudinal slots of the expansion shell, the annular bulb is pressed, especially at the beginning of the expansion process, strongly into the wall of the borehole; thus, the expansion shell becomes fixed in the borehole and therefore continued expansion is made sure.

The differing aperture angles of the cone of expansion and of the borehole in the expansion shell result at the outset of the expansion process in a line contact between the expansion shell and the cone of expansion at the front end of the expansion shell. In the course of the expansion process, however, the expansion shell has to press against the cone of expansion, in order to yield a favourable distribution of expansion pressure. It is therefore expedient to make the difference between the aperture angle of the cone of expansion and that of the borehole in the expansion shell 5° to 20°, preferably approximately 10°. An angle difference of this order ensures that the expansion shell will press against the cone of expansion only at its front end at the beginning of the expansion process, thus leading to a peak strain set up in the base material and, consequently, to an impression of the expansion region into the wall of the borehole.

The reduction in wall-thickness of the expansion shell in the peripheral direction towards the longitunial slots may come about in different ways. In order to keep the construction of the expansion shell simple it is of advantage to create the varying wall-thickness of the expansion shell by the excentrical arrangement of the inner radii against the external radius. The inner radii are made preferably greater than the external radius of the expansion shell. The internal contour of the expansion shell can be generated by a cylindrical object with its axis being tilted with respect to the longitudinal axis of the expansion shell; or by a conically-shaped object, its axis running parallel to the longitudinal axis of the expansion shell. Correspondingly, the inner radius remains constant in the expansion region of the expansion shell, or

it increases towards the front end in the direction of setting of the expansion shell.

In order to ensure that in the state of maximum expansion of the expansion shell the same will at least at some locations press against the entire circumference of the cone of expansion, it is expedient to make the largest inner radius of the expansion shell approximately equal to the largest radius of the cone of expansion. Then, as the cone of expansion is fully retracted up to its largest radius into the expansion shell, the expansion shell will press against the entire circumference of the cone of expansion.

The annular bulb situated on the outside of the expansion shell in the expansion region must not hinder the entry of the shell of expansion into the borehole. On the other hand, at least part of the figure-of-merit of the anchorage must be attained by pressing the annular bulb against the form determined by the base. In order to make this possible, the annular bulb is preferably given a sawtooth-like profile, with the shorter side of the profile facing the back end of the expansion shell. This shorter flank facing the rear end of the expansion shell may have a relatively high slope, in the extreme case it might be perpendicular to the longitudinal axis of the expansion shell. The longer flank, facing the front end of the expansion shell, is given a correspondingly smaller angle with respect of the longitudinal axis of the dowel and ensures good centering when the dowel is introduced into the borehole.

The invention shall be explained in greater detail below by the aid of Figures illustrating examples of application. Thus, it is shown:

in Fig. 1: an expansion dowel corresponding to the invention, in its un-expanded state;

in Fig. 2: a section along the line II-II of the expansion dowel shown in Fig. 1,

in Fig. 3: the expansion dowel according to Fig.1 and 2, in its expanded, anchored state,

in Fig. 4: a section along the line IV-IV of the expansion dowel shown in Fig. 3.

The expansion dowel shown in Fig. 1 to 4 consists of an anchorbar 1 and an expansion shell 2. The front end of the anchorbar 1 in the direction of setting is marked 1a and the rear end is marked 1b. The part of the expansion shell 1 joining the rear end 1b is provided with a thread 1c. The portion bordering the front end is given the shape of a cone of expansion 1d, the cross-section of which increases in the direction of setting. The expansion shell 2 also has a front end 2a and a rear end 2b, in respect of the direction of setting. The expansion shell 2 is provided with longitudinal slots 2c, emanating from the front end 2a. The longitudinal slots 2c facilitate the radial expansion in the region of expansion bordering at the front end 2a. The expansion shell 2 is provided in the region of expansion with a borehole 2d, that widens up in the direction of setting.The aperture angle alpha of the cone of expansion 1d is greater than the aperture angle of the borehole 2d. In this manner, it is ensured that the expansion shell 2, in its initial state shown in Fig. 1, presses only with its foremost edge against the cone of expansion 1d. The expansion shell 2 is provided, in the region of expansion, with an annular bulb 2e surrounding its circumference entirely. This annular bulb has a sawtooth-like profile and serves to achieve a joint of determined form between the expansion shell 2 and the base 3.

As shown in Fig. 2 in particular, the wall-thickness S of the expansion shell 2 decreases in the peripheral direction towards the longitudinal slots 2c.This variable wall-thickness S may be, e.g., attained by making the inner radii R3 excentrical with respect of the external radius R2 of the expansion shell 2. The largest inner radius R2 is made approximately equal to the largest radius R1 of the cone of expansion. In this manner it is ensured that the expansion shell 2 presses at least at its front end 2a against the entire circumference of the cone of expansion 1d,

when the cone of expansion is in its entirety retracted into the expansion shell 2. Accordingly, a uniform distribution of the expansion pressure over the entire circumferende of the cone of expansion is attained.In view of the difference in the aperture angle alpha and beta of the cone of expansion 1d and the borehole 2d, respectively, a very strong widening of the expansion shell 2 takes place at the outset of the expansion process, so that the expansion shell is pressed into the wall of the borehole 3a in the region of maximum wall - thickness. This causes peak pressures to arise on the annular bulb 2e, bringing about a tight joint when the annular bulb 3e is introduced into the borehole 3a in the base material 3. A structural element 4 to be fastened is placed on the anchorbar 1 and is fastened by the hexagonal nut 6 and the washer 5 on the base material 3. In view of the definite form of the joint between the expansion shell 2 through the annular bulb 2e with the base material 3, such an expansion dowel is also suitable for applications in tensile zones prone to be exposed to the risk of crack-formation.

Fig. 4 shows the placing of the expansion shell 2 on the circumference of the anchorbar 1.Due to the polygon-like external contour attained by the spreading of the expansion shell 2, the expansion dowel also displays good resistance against torsion.

THE CLAIMS DEFINING THE INVENTION ARE AS FOLLOWS:-

1. Expansion dowel having a front and rear end and being provided with:

an expansion shell, which has longitudinal slots over part of its length starting at the front end and which exhibits a borehole, that, in the expansion region, becomes increasingly wide at the opening of the front end being the direction of setting;

and with:

an anchorbar provided with a cone of expansion such as is retractable into the expansion shell and becomes increasingly wide at its front end in the direction of setting; characterised by the joint occurrence of the following features:

a) The angle of the taper of the cone of expansion is greater than that of the borehole in the expansion shell,

b) The wall thickness of the expansion shell becomes, in the region of expansion, increasingly thinner in the circumferential direction as it approaches the longitudinal slots,

c) The expansion shell possesses, in the region of expansion, at least one annular bulb entirely surrounding its outside circumference.

2. Expansion dowel according to Claim 1, characterised by the feature that the difference in the aperture angle of the cone of expansion and that of the borehole in the expansion shell lies between 5° and 20°.

3. Expansion dowel according to claim 2, characterised by said difference in aperture angle being approximately 10°.

4. Expansion dowel according to Claims 1, 2 or 3 characterised by the feature that the variable wall thickness of the expansion shell is attained by the eccentrical arrangement of the internal radii of the expansion shell with respect to the external radius of said shell.

STRALIAN
NT OFFICE

5. Expansion dowel according to any one of the Claims 1 to 4, characterised by the feature that the largest internal radius of the expansion shell is about the same size as the largest radius of the cone of expansion.

6. Expansion dowel according to any one of the Claims 1 to 5, characterised by the feature that the annular bulb possesses a sawtooth-like profile, with the shorter flank of this profile facing the rear end of the expansion shell away from the expansion region.

7. An expansion dowel substantially as herein described with reference to the accompanying drawings.

DATED this 6th Day of March, 1991
HILTI AKTIENGESELLSCHAFT

Attorney: PETER HEATHCOTE
Fellow Institute of Patent Attorneys of Australia
of SHELSTON WATERS

STRALIAN
NTS
NT OFFICE

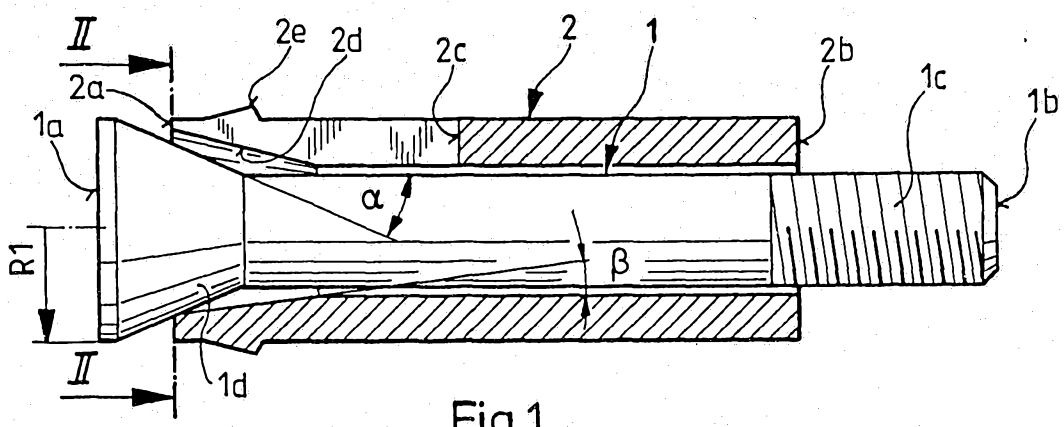

Fig.1

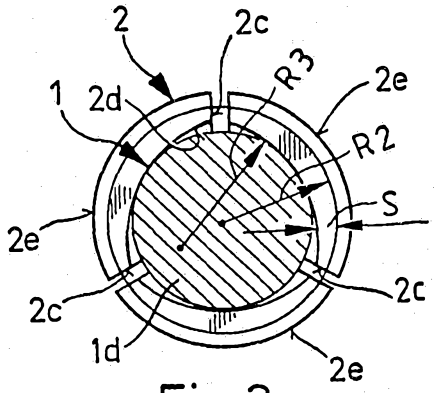

Fig.2

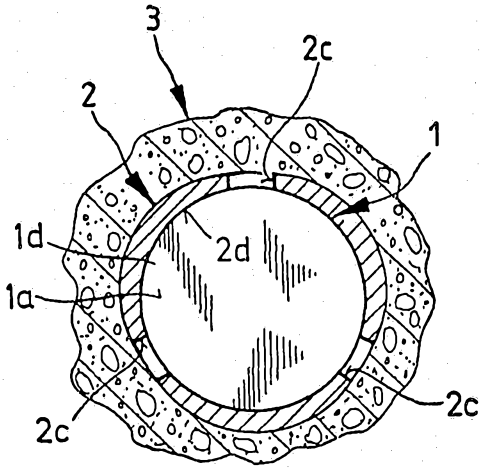

Fig.4

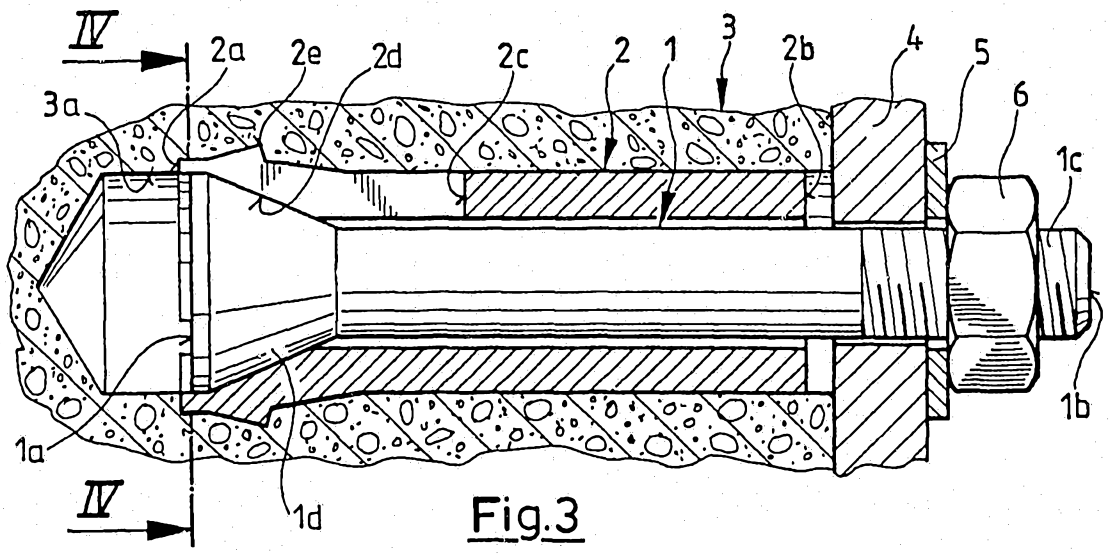

Fig.3