United States Patent [19]

Csumrik

[11] **3,809,278**

[45] **May 7, 1974**

[54] **COLLAPSIBLE SHIPPING CONTAINER**

[75] Inventor: **Joseph D. Csumrik,** Peterborough, Ontario, Canada

[73] Assignee: **Central Steel Works (Peterborough) Limited,** Peterborough, Ontario, Canada

[22] Filed: **Dec. 21, 1971**

[21] Appl. No.: **210,531**

[30] **Foreign Application Priority Data**

Nov. 2, 1971 Canada 127416

[52] **U.S. Cl.** ..... **220/4 F,** 217/13, 217/69, 220/7, 220/81 R

[51] **Int. Cl.** **B65d 7/24,** B65d 7/30

[58] **Field of Search** ..... 220/4 F, 6, 7, 81 R; 217/12, 15, 43 R, 43 A, 65, 69

[56] **References Cited**

UNITED STATES PATENTS

1,205,418	11/1916	Ward	220/4 F
1,185,069	5/1916	Curry	220/4 F
2,815,880	12/1957	Blatz	220/4 F
2,553,273	5/1951	Phillips	217/15
3,266,656	8/1966	Kridle	220/4 F
3,244,312	4/1966	Lawson	220/81 R
2,696,929	12/1954	Morterol	220/7
2,801,761	8/1957	Pigatti	217/12 R
2,919,826	1/1960	Richter	220/4 F

Primary Examiner—George E. Lowrance

[57] **ABSTRACT**

A collapsible rectangular shipping container having a base assembly, four side members and a cover. The container has an erect position for containing goods and a collapsed position in which the component parts are not free to become separated from each other and in which the container may be conveniently stored or transported. The container may be quickly and easily converted between the two positions by hand.

1 Claim, 9 Drawing Figures

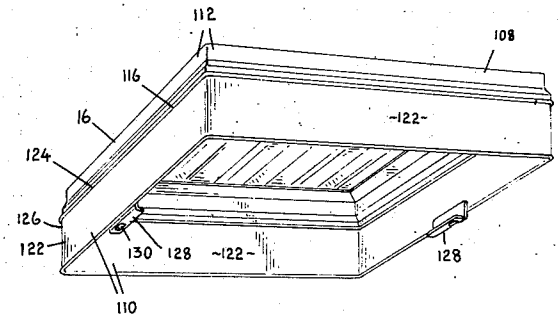

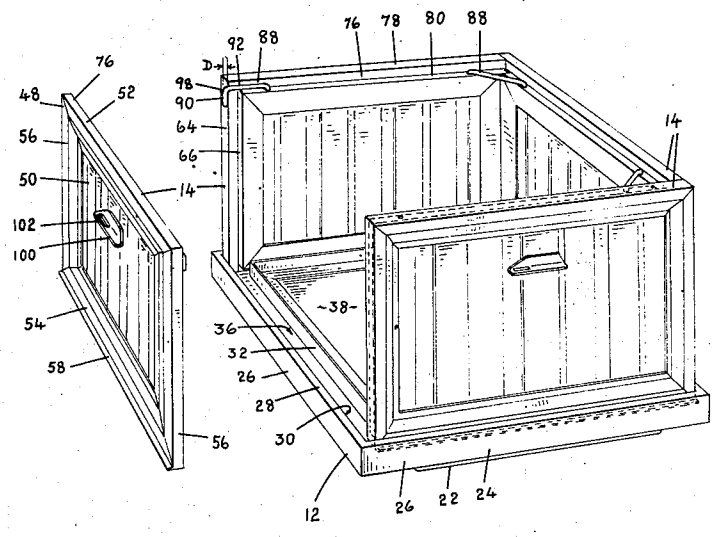

Fig. 1.

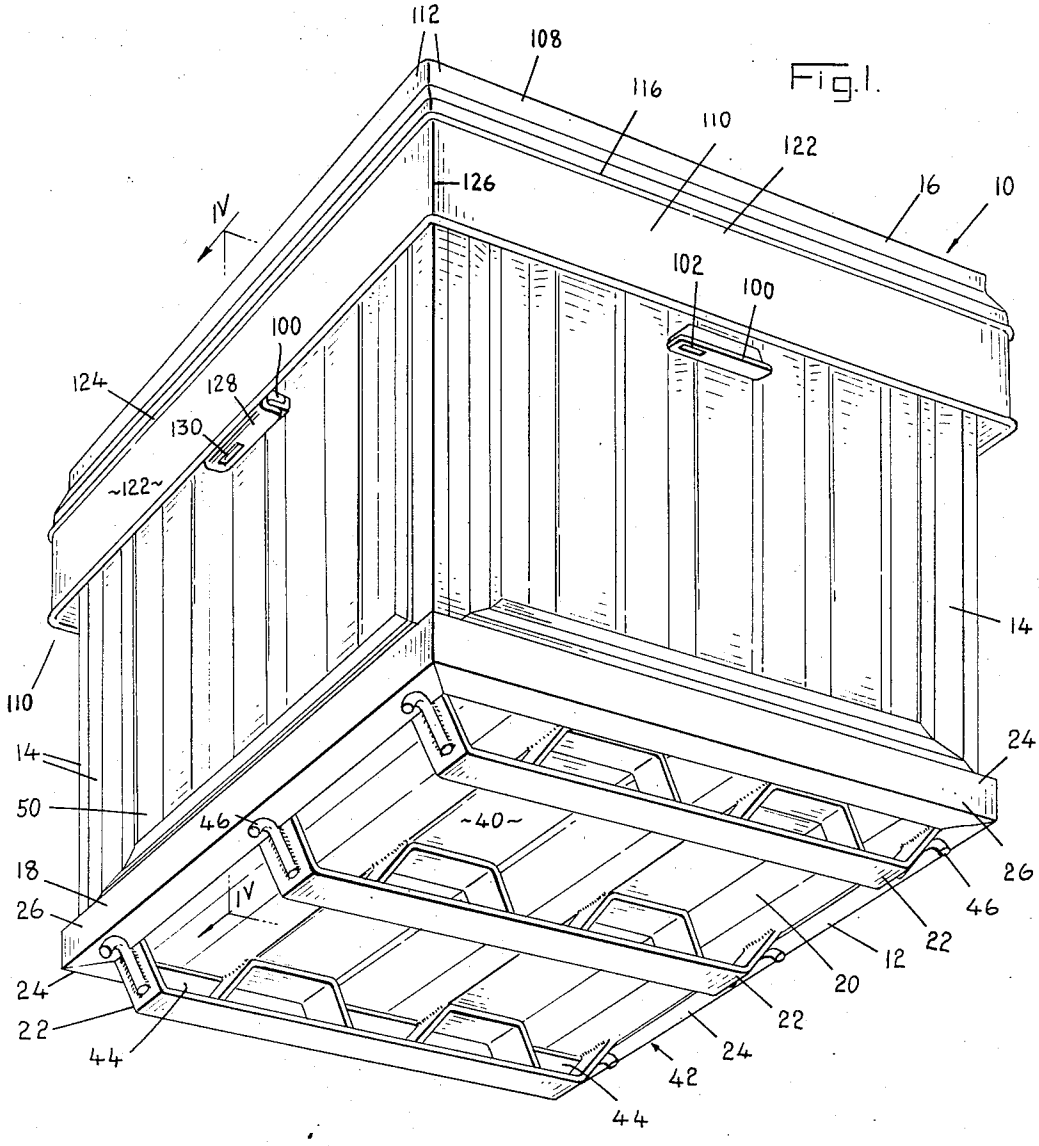

Fig. 5.

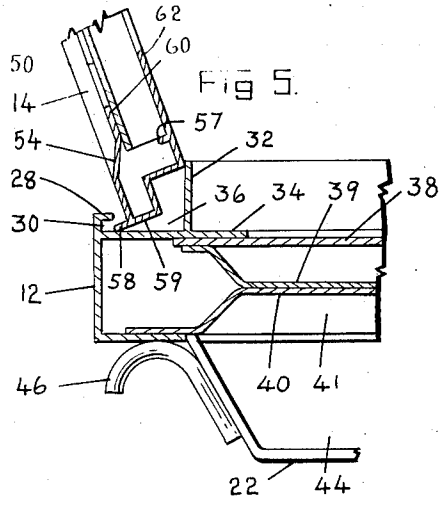

Fig. 6.

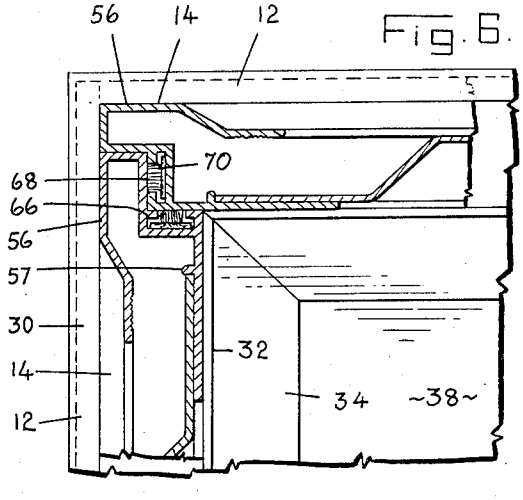

Fig. 2.

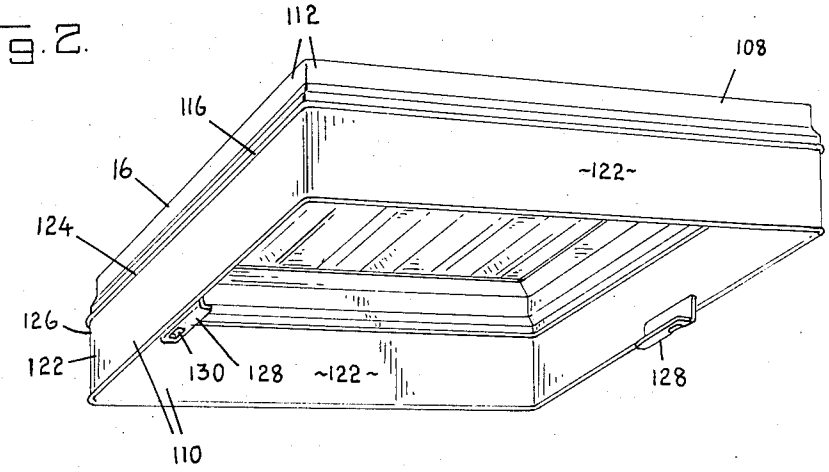
112
108
116
16
~122~
124
126
122
130
128
~122~
128
110

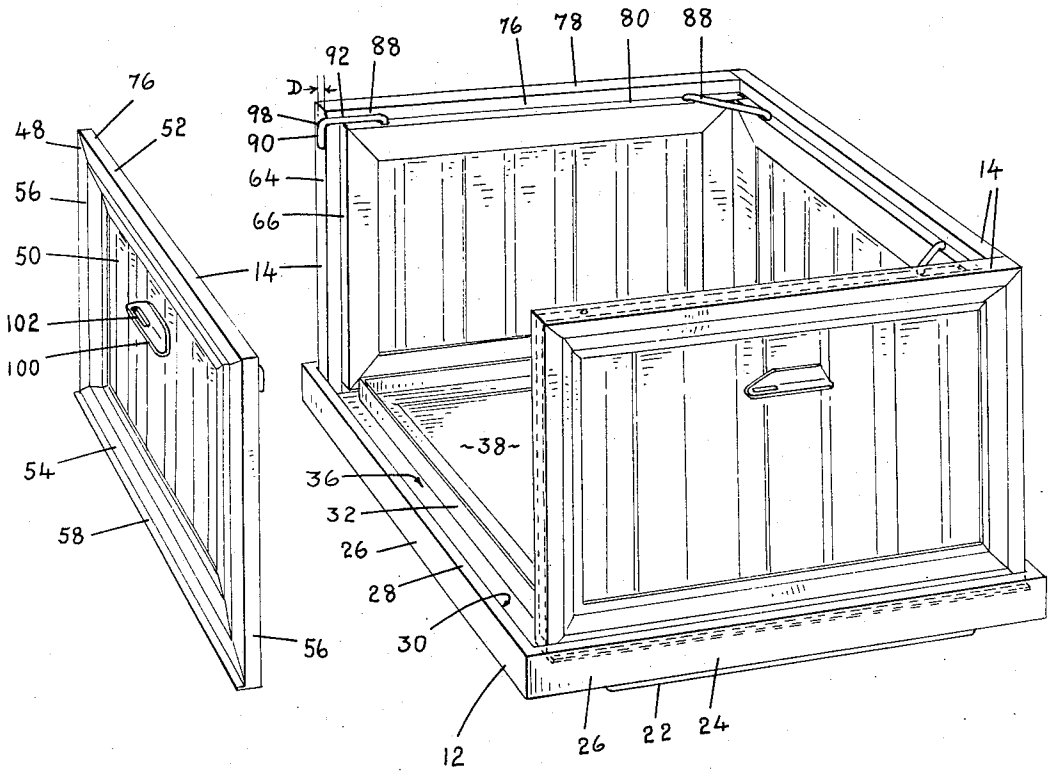
76
78
80
88
92
88
D
98
90
64
66
14
14
76
48
52
56
50
102
100
54
58
56
~38~
36
32
26
28
30
12
26
22
24

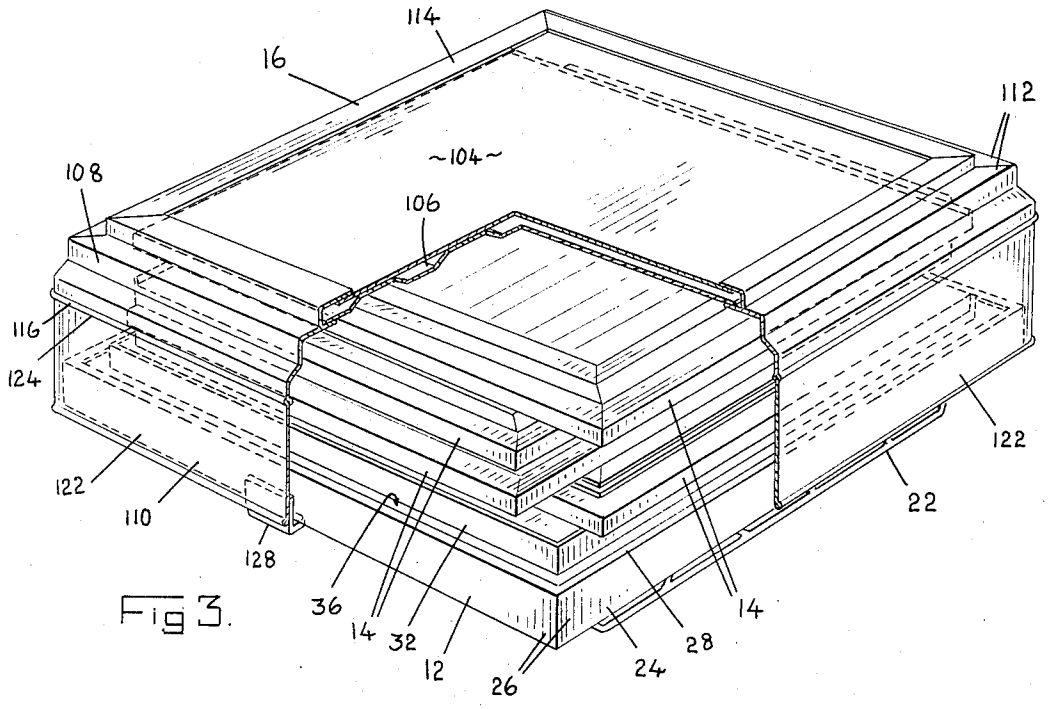
114
16
112
~104~
108
106
116
124
122
110
128
36
14
32
12
26
24
28
14
22
122

Fig 3.

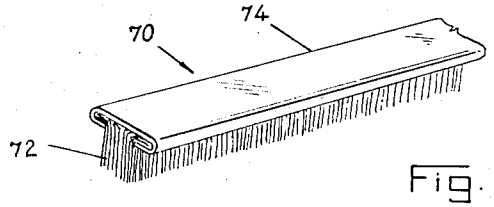
74
70
72

Fig. 7.

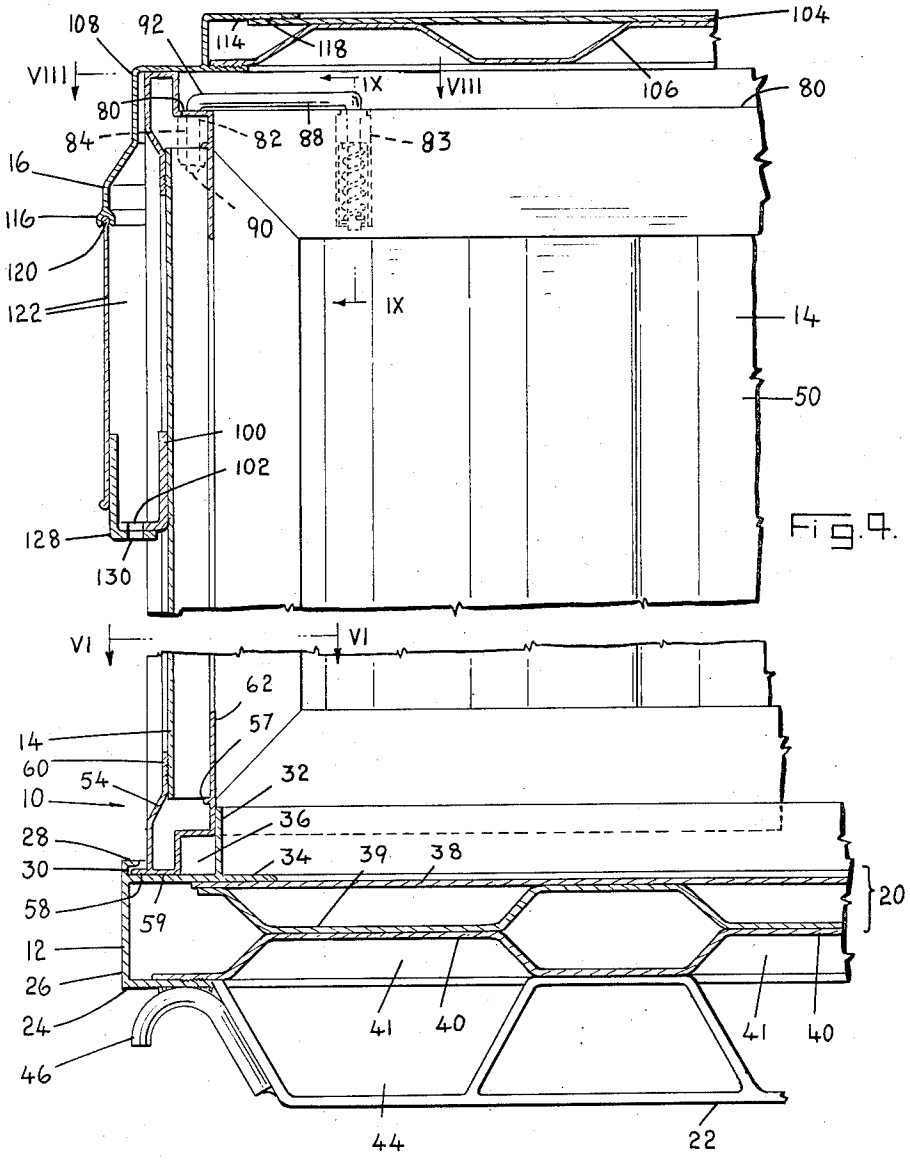

Fig. 4.

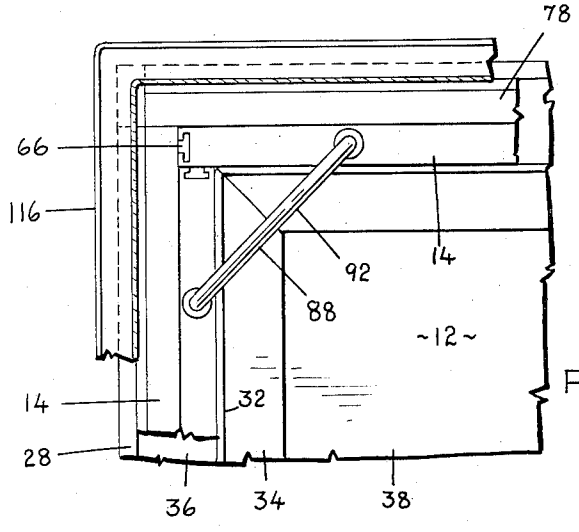

Fig. 8.

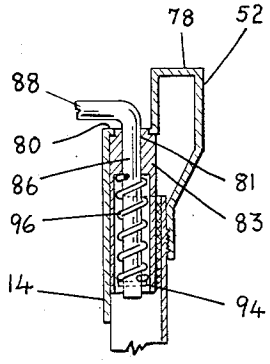

Fig. 9.

COLLAPSIBLE SHIPPING CONTAINER

BACKGROUND OF THE INVENTION

This invention relates generally to shipping containers and more particularly to a collapsible shipping container which is quickly and easily converted between erect and collapsed positions and which may be conveniently stored or transported in the collapsed position.

In the past collapsible shipping containers had the disadvantage that they were not easily collapsed and reassembled. Often tools were required to be used by persons familar with the containers, resulting in delay, inconvenience and higher cost of using the containers. In addition, shipping containers which were assembled using nails or screws could be used only a relatively small number of times before they badly deteriorated which also added to the cost of using them. These early collapsible containers had the additional problem that in the collapsed position the component parts were often separated and occasionally lost, with resulting difficulty in reassembling the containers.

More recently, these disadvantages have been overcome to some extent by the use of shipping containers which may be collapsed and reassembled by hand. However, some of these containers still have the disadvantage that when they are stored or shipped in a collapsed position, the parts frequently become separated and lost. While these containers are less expensive and inconvenient to use in that they can be collapsed and assembled by hand, they are still unsatisfactory in that they are not designed to be opened from any one side to facilitate loading or unloading goods shipped in the container. Furthermore, these containers do not satisfactorily combine sufficient strength and durability to enable them to be used a large number of times with lightweight and low manufacturing costs. Another problem with these containers is that occasional exposure to the elements while loaded has resulted in damage to the contents because the containers are not sufficiently weatherproof.

SUMMARY OF THE INVENTION

Accordingly, it is an object of the present invention to at least partially overcome these disadvantages by providing a relatively strong durable inexpensive collapsible container which may be manually converted between the erect and the collapsed positions and in which collapsed position the component parts are not free to become separated from each other.

To this end, in one of its aspects, the invention provides a collapsible rectangular container comprising a base assembly, four side members and a cover adapted to be converted between erect and collapsed positions the base assembly being defined by four vertical outer edges, the length of the longest outer edge of the base assembly being at least as great as the width and height of each side member, the side members each being pivotally engaged to the base assembly adjacent a respective outer edge of the base assembly and nestably abutting with adjacent side members in the erect position, each side member having complemental means adapted to interconnect the side members to retain them in the erect position, the cover having a continuous skirt formed of four vertical side portions, the skirt being adapted to encompass an upper portion of the side members in the erect position and the outer edges of the base in the collapsed position.

Further objects and advantages of the invention will appear from the following description taken together with the accompanying drawings in which:

BRIEF DESCRIPTION OF THE DRAWINGS

FIG. 1 is a perspective view of a collapsible container in the erect position according to a preferred embodiment of the invention;

FIG. 2 is a perspective view of the embodiment of the invention shown in FIG. 1, in a partially assembled or partially collapsed position;

FIG. 3 is a perspective view of the embodiment of the invention shown in FIG. 1 in the collapsed position;

FIG. 4 is a broken sectional view taken along line IV—IV of FIG. 1;

FIG. 5 shows a portion of the view seen in FIG. 4 in a partially assembled or partially collapsed position (located on page with FIG. 1);

FIG. 6 is a partial sectional view taken along line VI—VI in FIG. 4 showing a vertical corner of the container in the erect position (located on page with FIG. 1);

FIG. 7 is a perspective view of a section of the weatherstrip seen in location in FIG. 6 (located on page with FIG. 3);

FIG. 8 is a partial sectional view taken along line VIII—VIII in FIG. 4; and

FIG. 9 is a sectional view taken along line IX—IX in FIG. 4.

DESCRIPTION OF THE PREFERRED EMBODIMENT

Reference is first made to FIG. 1 which shows a rectangular collapsible container **10** according to a preferred embodiment of the invention having a base assembly **12**, four side members **14** and a cover **16**. In the embodiment shown, the cover **16** is square and the four side members **14** are identical, although the container may equally as well have a rectangular cover and two pairs of identical side members. The height of each side member **14** must not be greater than its width, so that the container may be converted to the collapsed position shown in FIG. **3**, with all of the side members **14** located one on top of the other on the base assembly **12** within the cover **16**. In this collapsed position the containers may be vertically stacked for convenient storage and take up little space with no danger of the component parts becoming separated during storage or shipping.

First describing the structure of the base assembly **12**, FIGS. **1** and **4** show the base assembly **12** is formed with a square outer frame **18** enclosing an inner panel assembly **20** supported by parallel skids **22**. The square frame **18** is formed in turn of four identical longitudinal extrusions **24** which are welded together at their ends to form mitered corners. As best seen in FIG. **4**, each longitudinal extrusion **24** has a flat vertical outer edge **26** which extends upward into an inwardly projecting lip **28** to define an inwardly opening groove **30**. Each longitudinal extrusion **24** also has a vertical flange **32** extending upward from its upper surface **34** to a height higher than lip **28**. The vertical flange **32** extends parallel to the lip **28** along the entire length of the longitudinal extrusion **24** to form an upwardly opening trough **36** between them. Therefore, when the longitudinal ex-

trusions 24 are rigidly connected together to form the frame 18, the grooves 30 and troughs 36 interconnect at their ends to form a continuous groove and continuous trough around the entire length of the frame 18. The panel assembly 20 consists of a flat sheet 38 supported above two identically fluted sheets 39, 40. The fluted sheets are located with all the flutes 41 parallel to each other, but with the upper fluted sheet 39 inverted over the lower fluted sheet in an oppositely fluted construction. The flat upper sheet 38 provides a floor for the container and the oppositely fluted construction of the fluted sheets 39, 40 provides high strength necessary to support the contents of the container combined with light weight which is desirable in a shipping container. The edges of the panel assembly 20 are retained in their position within the longitudinal extrusions 24 by the ends of the extrusions being connected together to form the frame 18, although the sheets may be additionally spot welded to the frame to make them more secure. The skids 22 extend transversely to the flutes 41 in the fluted sheets 39, 40 and are welded at their ends to opposite sides of the frame 18 and between their ends to the lower fluted sheets 40. The skids 22 have open spaces 42 between them and coinciding transverse openings 44 through them so that the base assembly forms a pallet under which the forks (not shown) of a conventional fork lift truck may be inserted from any side to lift the container when it is in either the erect or collapsed position. The base assembly is also shown having cable hooks 46 attached to the ends of each of the outer skids to receive a cable from a crane to lift the container in either position.

The structure of only one side member 14 will be described, although it is understood that if containers having two pairs of identical side members are required the proportions of the components may be varied. As best seen in FIG. 2 and described in the erect position, each side member 14 is similarly constructed with an outer rectangular frame 48 enclosing an inner vertical fluted panel 50. The rectangular frame 48 is formed by placing an upper extrusion 52, a lower extrustion 54 and two identical vertical extrusions 56 around the vertical fluted panel 50 and welding the ends of the extrusions together to form mitered corners. The panel 50 is prevented from shifting positions within the rectangular frame 48 by ridges 57 which project outwardly from the inner wall of all of the extrusions and against which the edges of the panel abuts. Alternatively or additionally, the panel may be spot welded to the extrusions which form the frame. As best seen in FIG. 4, the lower extrusion 54 has an outward projecting horizontal tongue 58 along its flat base 59, a vertical outer wall 60 and a vertical inner wall 62 extending along its entire length. The tongue 58 fits securely into groove 30 in the base assembly 12 when the side member 14 is in the vertical position with the inner wall 62 abutting on the vertical flange 32. The outer wall 60 is lower than the inner wall 62 so that rain water or other liquids caught between the walls will overflow out of the container rather than into the container.

The vertical extrusions 56 of each side member 14 are formed having an outer edge 64 with an L-shaped profile with a channel 66 having a T-shaped cross section located in the base of the L. In the erect or assembled position, the L-shaped outer vertical edge 64 of each vertical extrusion nests with the abutting vertical extrusion of an adjoining side member 14, as seen in FIG. 6. In this position the mouth 68 of each T-shaped channel 66 opens onto a flat surface of the abutting vertical extrusion. Each T-shaped channel 66 is shaped to frictionally retain a section of weather strip 70 inserted into the channel from one end. As shown in FIG. 7 the weather strip 70 has nylon bristles 72 fixed to an aluminum backing 74. In location, the bristles 72 extend through the mouth 68 of the channel 66 to provide a double weather seal between abutting vertical extrusions 56 of adjoining side members 14.

The upper extrusion 52 which connects the upper ends of the two vertical extrusions 56 of each side member 14 has an upper edge 76 which also has an L-shaped profile. As weather strip is not required along the upper edge the upper extrusion 52 need not necessarily be formed with a T-shaped channel, although for convenience of manufacture an extrusion with the same cross sectional shape as the vertical extrusions 56 may be used. The L-shaped upper edge 76 has a flat outer upper horizontal portion 78 upon which the cover 16 rests and a flat inner horizontal ledge portion 80 vertically spaced from the cover 16. Each side member 14 has a first cylindrical passage 81 extending through the ledge portion 80 of the upper edge 76 near one of the vertical extrusions 56, and a second cylindrical passage 82 extending through the ledge portion 80 near the other vertical extrusion 56. A sleeve 83 is welded into the first cylindrical passage 81 with its upper end flush with the ledge portion 80, and a collar 84 is welded into the second cylindrical passage 82 with its upper end also flush with the ledge portion 80. The sleeve 83 receives a first downwardly projecting end 86 of a rod 88 having a second downwardly projecting end 90 connected to the first end 86 by horizontal portion 92. The first end 86 is retained in the sleeve 83 by a pin 94 passing through the rod below a spring 96, which allows the rod 88 to be extended vertically upward but exerts a continuous downward force upon it. This downward force provides a positive return when the rod is displaced upwardly to the extended position and otherwise normally retains the rod in the retracted position shown in FIG. 9. As well as being extendible, this construction allows the rod 88 to pivot in both the extended and retracted position about its first end 86 located in the sleeve 83, particularly between the erect position in which the second end 90 of the rod is received in the collar 84 in the second cylindrical passage 82 of an adjacent side member and the collapsed position in which the rod is located in the plane of the side member 14. In the retracted position the horizontal portion 92 of the rod 88 must not extend above the upper horizontal portion 78 of the upper edge 76 to avoid interferring with the cover 16 resting on the upper horizontal portion 18 in the erect position and to avoid possible interference with the location of the side member 14 within the cover 16 in the collapsed position. As seen in FIG. 2 in the collapsed position the rod 88 is pivoted to a position coplanar with the side member in which a portion 98 of the rod 88 extends a perpendicular distance d beyond the outer vertical edge 64 of the side member. However, the distance d which the overhanging portion extends beyond the vertical edge 64 combined with width of the side member 14 must not be greater than the length of the longest outer edge 26 of the base assembly 12, to permit the side member 14 to be located within the cover 16 in the collapsed position.

A horizontal outwardly extending tab **100** with an elongated hole **102** through it, is secured to the vertical fluted panel **50** of each of the side members **14** approximately midway between its vertical extrusions **56.** These outwardly extending tabs **100** cooperate with the cover **16** as described below to releasably attach the cover to the sides in the erect position.

The cover **16** is formed with a flat plate **104** and a supporting fluted plate **106** enclosed by a rectangular brim **108** from which depends a vertical skirt **110.** The rectangular brim **108** is constructed by welding the corners of four identical corner extrusions **112** together, and has a continuous upper horizontal fringe **114** and a continuous downward opening socket **116.** The cover **16** is weatherproofed by application of a chaulking compound **118** to abutting surfaces of the upper horizontal fringe **114** and the flat plate **104** prior to assembly of the brim **108** about the plates **104, 106.** The vertical skirt **110** is formed by inserting an upper beaded edge **120** of four flat vertical side portions **122** into respective portions of the downward opening socket **116** and welding the ends of the vertical side portions together. In this way, a continuous ball and socket join **124** is formed between the brim **108** and the skirt **110,** which results in the corners **126** of the skirt being rigid while permitting limited transverse horizontal resilient movement of the side portions **122** between the corners. A horizontal inwardly extending tab **128** is secured to two opposite side portions of the skirt **110.** The inwardly extending tabs **128** are located so that the resilient movement of the side portions to which they are secured permits them to be locked over the outwardly extending tabs **100** on the side members **10** in the erect position, and locked over the outer edges **26** of the base assembly **12** in the collapsed position, as seen in FIG. **3.** The inwardly extending tabs **128** have elongated holes **130** which correspond to the elongated holes **102** in the outwardly extending tabs **100,** through which custom seals or locks may be inserted, in the erect position. The outwardly extending tabs **100** are provided on all of the side members, although actually used on only two opposite members, in order that the side members may be completely interchangeable. This, of course, would not be necessary in the previously mentioned alternative embodiment of the invention having two pairs of identical side members.

In use, the container may be manually converted from the erect position shown in FIG. **1** to the collapsed position shown in FIG. **3** in the following steps:

First, the opposite resilient side portions **122** of the skirt **110** having the inwardly extending tabs **128** are displaced horizontally outward to free the inwardly extending tabs **128** from the outwardly extending tabs **100** on the side members **14,** and the cover **16** is lifted vertically upward. The contents of the container may then be removed through the open top or desired ones of the side members may be removed to assist in removal of the goods. The first side member is removed by first disengaging the two appropriate rods **88** by lifting them upward until their second ends **90** are freed from their respective collars **84** and rotating and releasing them in a disengaged position, and then pivoting the side member **14** outwardly to free the tongue **58** from the groove **30** in the base assembly **12.** The rod assembly **88** attached to the removed side member is then rotated to a position coplanar with the side member and the side member is placed in a horizontal position within the container, after the contents have been removed. A second adjacent side member may be removed by disengaging only one rod assembly **88,** and the procedure is repeated until all four of the side members **14** are stacked one on top of the other in a horizontal position on the base assembly **12.** The cover **16** is then lowered over the side members **14** to a position where the skirt **110** encompasses the outer edges **26** of the base assembly and the inwardly extending tabs **128** are locked over an opposite pair of the edges **26.** In order for it to be possible to lower the cover **16** over the stacked side members **14** it is necessary that the height of the side members not be greater than the width of the base assembly and that the width of none of the side members combined with the distance d which the overhanging portion **98** of its rod **88** extends beyond the vertical edge **64** be greater than the length of the longest outer edge of the base assembly. The container may be quickly and easily manually reassembled to its erect position by outwardly displacing the side portions **122** having the inwardly extending tabs **128** to release the tabs from the edges **26** of the base assembly and then reversing the above steps.

In the erect position, the container provides a double seal to moisture running down the outer sides of the vertical panels **50.** Vertical inner wall **62** is higher than vertical outer wall **60** on the lower extrusion **54** of each side member **14,** which forces the moisture to overflow outward rather than into the container. In addition, on the longitudinal extrusions **24** on the base assembly **12** the vertical flanges **32** are higher than lips **28** which again forces the moisture to overflow outward rather than into the container.

Although the disclosure describes and illustrates a preferred embodiment of the invention, it is to be understood that the invention is not restricted to that particular embodiment.

What we claim is:

1. A collapsible rectangular container comprising a base assembly, four side members and a cover adapted to be converted between erect and collapsed positions the base assembly being defined by four vertical outer edges, the length of the longest outer edge of the base assembly being at least as great as the width and height of each side member, the side members each being pivotally engaged to the base assembly adjacent a respective outer edge of the base assembly and nestably abutting with adjacent side members in the erect position, each side member having an L-shaped upper edge extending between first and second outer edges, the L-shaped upper edge having an outer upper horizontal portion and a lower inner horizontal ledge portion, each side member having complemental means adapted to interconnect the side members to retain them in the erect position, the cover having a continuous skirt formed of four vertical side portions, the skirt being adapted to encompass an upper portion of the side members in the erect position and the outer edges of the base in the collapsed position, each complemental means comprising a rod with first and second downwardly projecting ends connected by a horizontal portion, a vertical sleeve opening onto the ledge of said one side member near the first outer edge of said one side member, said sleeve adapted to pivotally extendibly receive the first end of the rod, positive return spring means engaging the first end of the rod to continuously urge the first end of the rod to a retracted po-

sition, and a vertical collar opening onto the ledge of said adjacent side member near the second outer edge of said adjacent side member, said collar adapted to removably receive the second end of the rod in the erect position wherein the entire rod is located below a horizontal plane through the said upper horizontal portion, the rod adapted to upwardly displaced to remove said second end from said collar pivoted to be coplanar with said one side member and retracted to its original vertical position to assume the collapsed position wherein an overhanging portion of the rod projects a horizontal distance *d* beyond the first vertical edge of the said one side member, the length of the longest outer edge of the base assembly being at least as great as the sum of the distance d and the width of the said one side member.

* * * * *