May 23, 1950 R. A. BIERWIRTH 2,508,365

METHOD OF AND APPARATUS FOR SUBJECTING FLUID MATTER TO A HIGH-FREQUENCY ELECTRIC FIELD

Filed Sept. 28, 1944

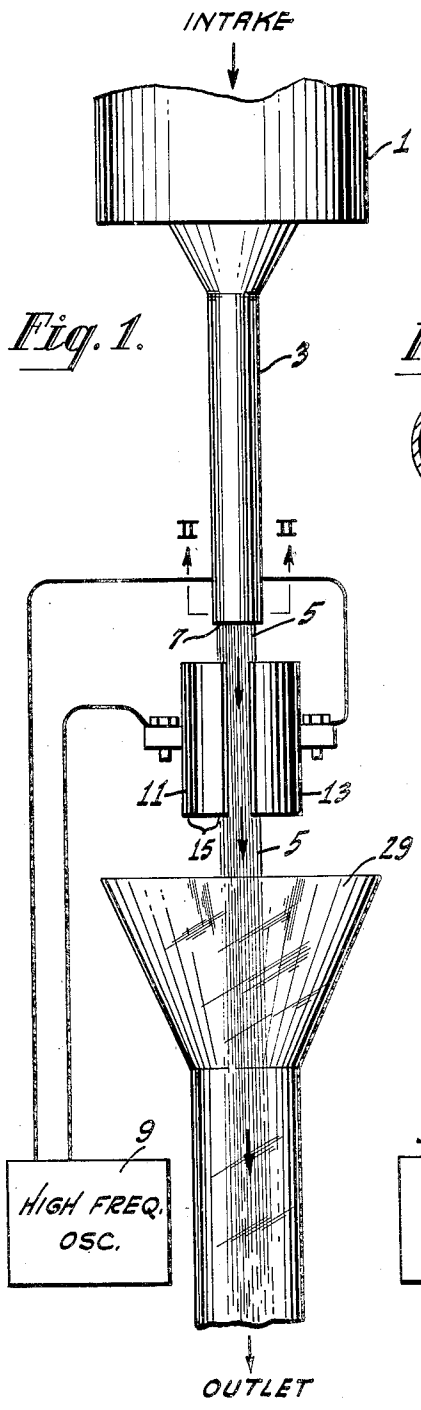

Fig. 1.

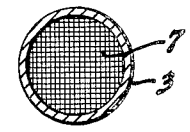

Fig. 2.

Fig. 3.

INVENTOR.
RUDOLPH A. BIERWIRTH
BY
ATTORNEY

Patented May 23, 1950 2,508,365

UNITED STATES PATENT OFFICE

2,508,365

METHOD OF AND APPARATUS FOR SUBJECTING FLUID MATTER TO A HIGH-FREQUENCY ELECTRIC FIELD

Rudolph A. Bierwirth, Princeton, N. J., assignor to Radio Corporation of America, a corporation of Delaware

Application September 28, 1944, Serial No. 556,265

3 Claims. (Cl. 219—47)

1

This invention relates to improvements in the art of subjecting milk and other liquid or fluid matter to an electric field.

It has previously been proposed to generate an electric field of a desired frequency and intensity within a glass or other dielectric conduit (as by means of spaced apart electrodes mounted on or adjacent to the walls of the conduit) and to flow the material to be treated, at a certain rate, through the field within the conduit with a view to heating said material to the degree required to sterilize, condense or otherwise alter its contents or its physical or chemical structure.

The principal problem encountered in the practice of such "continuous flow methods" of treating fluid materials with an electric field is that of preventing localized overheating of the material, and many ingenious electrode arrangements, pumping systems and thermally actuated control valves have been designed with a view to solving this problem. All such prior art systems, however, appear to be based upon the seemingly plausible, but actually erroneous, assumption that if the distribution and intensity of the lines of force within the conduit are of a desired pattern and value, it is then merely necessary to flow a certain volume of material through the conduit in a given period of time in order to achieve the desired result.

The reason why localized overheating may occur in spite of the elaborate precautions heretofore employed to prevent such overheating, is that a fluid stream in flowing through a pipe or conduit is subjected to different degrees of frictional retardation as measured along a line normal to the direction of travel of the stream. Thus, it can be demonstrated that the molecules or other elementary particles which in their flow contact the inner surface of the conduit are subject to a greater degree of frictional retardation than the particles which make up the center or core of the stream. The molecules or other fluent particles which are thus retarded may remain, by reason of their relatively low velocity, within the electric field for a period of time substantially longer than required to raise their temperatures to the degree calculated to effect the desired physical or chemical change in the material, and it is this prolonged exposure to the electric field of only a portion of the material that results in "localized overheating."

Localized overheating is manifest in different ways in different materials. Thus, milk pasteurized with radio frequency energy by the continuous flow method of the prior art may exhibit a burnt taste, while more or less tacky materials such as latex, essential oils (e. g., orange juice) and certain polymerizable plastic materials, when thus treated, may form an adherent coating on the inner walls of the conduit adjacent to the electrodes through which the radio frequency energy is applied.

2

Accordingly, the principal object of the present invention is to provide a new and improved "continuous flow method" of subjecting milk, orange juice, beer, latex and numerous other fluid or fluent materials to an electric field, and one which in its practice obviates the foregoing and other less apparent objections to prior art methods of treating such materials.

Another and related object of the present invention is to provide an improved and inexpensive method of and apparatus for subjecting the entire cross-sectional area of a fluid stream uniformly to the action of an electric field.

The foregoing and other objects are achieved in accordance with the invention by generating an electric field in the space between one or more pairs of capacitor electrodes and causing the liquid or the fluent material to pass through said field in the form of a continuous jet, spout or "solid" stream. In accordance with the invention, the stream of material in passing through the electric field moves with substantially uniform velocity (as measured along a cross-sectional area of the stream) and is subject only to that substantially negligible degree of frictional retardation provided by the air or other gaseous ambient surrounding the stream; thus, no part of the cross-sectional area of the stream is slowed down (as in the prior art) by positive frictional contact with the walls of a conduit or other container.

In order to further ensure that each molecule or other elementary particle of the fluid material will be subject to the field for the same period of time as the others, means are preferably provided for minimizing the possibility of turbulence in the stream of material being treated.

Certain preferred details of construction and operation will be apparent and the invention itself will be best understood by reference to the following specification and to the accompanying drawing, wherein

Figure 1 is a partly diagrammatic elevational view of an apparatus constructed in accordance with the principle of the invention for the electrical treatment of various fluid materials,

Figure 2 is a sectional view taken on the line

II—II of Fig. 1 and shows one form of screen for preventing turbulence in the fluid stream, and

Figure 3 is a view similar to Fig. 1 but showing an alternative embodiment of the invention.

In the embodiments of the invention which have been selected for illustration, 1 designates generally a reservoir for the liquid or fluid material to be treated, and 3 designates means in the form of a circular pipe or nozzle for causing the material to flow downwardly from the reservoir in the form of a continuous jet or stream 5. When (as described in application Serial No. 556,264 of George H. Brown, filed concurrently herewith) the apparatus here illustrated is to be used in the pasteurization of milk, or other liquid, the said liquid may be preheated. Ordinarily the velocity of the jet will be determined by the force exerted upon the column of liquid in the pipe 3 by the body of liquid in the reservoir 1. However, an auxiliary pump (not shown) may be provided for regulating the velocity of the jet whenever necessary or desirable.

In order to minimize any turbulence in the stream 5, the liquid may be caused to pass through a foraminous surface such as the metal screen 7 (see Fig. 2) mounted within the pipe 3 adjacent to the lower end or outlet of the said pipe. The material thus emerges from the said outlet in the form of a continuous, non-turbulent, "solid" stream or jet of uniform cross-sectional area and this uniformity in the flow and dimensions of the stream is maintained (without the use of any retaining walls) over a distance sufficiently long to permit the application of a high frequency electric field to the said stream. The energy for creating the electric field is supplied by an oscillator 9 and is applied to the stream by a pair of spaced apart electrodes 11, 13 (Fig. 1); 21, 23 (Fig. 3).

The electrodes 11 and 13 of Fig. 1 comprise a pair of curved metal plates arranged in capacitive relation on opposite sides of the stream, with the inner concave surfaces of the said plates presented across an intervening space 15 to the circular surface of the stream. If desired, however, the pipe or nozzle 7 may be so designed that the fluid emerges therefrom in the form of ribbon made up of one or more jets, in which case the elctrodes may comprise a pair of flat metal plates (not shown) arranged opposite each other and parallel to the major surfaces of the ribbon. In any event, the intervening space 15 need be no wider than necessary to prevent accidental contact with the material of which the said stream or streams is comprised.

The electrodes 21 and 23 of Fig. 3, on the other hand, comprise a pair of metal bands or ribbons which encircle the stream 5 and are mounted one above the other in collinear and symmetrical capacitive relation, on the outer surface of a glass tube 25 which has an inside diameter substantially larger than the diameter of the stream 5 which passes therethrough. The tube 25, in addition to comprising a convenient support for the electrodes 21 and 23, also serves as a shield for protecting the stream or jet 5 against any turbulence in the air or other gaseous medium through which the stream passes and which might tend to alter the path, contour or dimensions of the stream. As here shown, the tube 25 is provided at its lower end with a bulbous portion 27 into which the now treated material

is received. In the embodiment of the invention shown in Fig. 1, a funnel 29 is provided for the same purpose.

It will be appreciated by those skilled in the art to which this invention appertains that, although the direction of the lines of force which comprise the alternating electric field between the electrodes is different in the two illustrated embodiments of the invention, the stream 5 is affected in the same manner in each case, i. e., the material of which the streams 5 are comprised becomes heated to a degree determined by the frequency and intensity of the electric energy applied to the stream by the said electrodes. The invention is of course not limited to the use of alternating currents of any particular frequency or power, as these factors depend to a large extent upon the nature of the material being processed, and the time it requires for a particular treatment. However, it may here be mentioned that with the electrodes arranged in the manner shown in Fig. 3 and supplied from a 2 kilowatt oscillator with energy of a frequency of the order of 30 megacycles per second, the apparatus operated to raise the temperature of a jet of milk from about 140° F. to about 205° F. in a period of time considerably less than one second, and this, too, without causing the milk to exhibit the burnt taste characteristic of milk treated under similar conditions, but with its flow retarded, as in the prior art, by contact with the inner walls of a conduit.

It will now be apparent that the present invention provides a novel method of and means for subjecting all of the molecules or other elementary particles comprising a liquid or fluent stream uniformly to the action of an electric, or an electromagnetic, field.

What is claimed is:

1. A method of treating a liquid which comprises: causing said liquid to move along a path throughout at least a portion of which said liquid is unconfined at its boundaries, and subjecting said liquid to the influence of a high frequency electric field only during its passage along that portion of said path whereat said liquid is unconfined at its boundaries.

2. A method of treating fluid matter which comprises: causing said fluid matter to flow in the form of a stream along a path throughout at least a portion of which said stream moves at a substantially uniform velocity as measured across said stream, and subjecting said stream to the influence of a high frequency electric field only during its passage along said portion of said path.

3. In apparatus for the treatment of fluent matter with an electric field, a conduit constituted of a dielectric material, a pair of electrodes mounted in spaced capacitive relation on the outer surface of said conduit, and means for projecting said fluent matter through the bore of said conduit between said electrodes and out of contact with the inner surface of said bore.

RUDOLPH A. BIERWIRTH.

REFERENCES CITED

The following references are of record in the file of this patent:

UNITED STATES PATENTS

Number	Name	Date
1,934,704	Golden	Nov. 14, 1933
2,303,341	Dufour et al.	Dec. 1, 1942