July 20, 1965 H. M. MERKEL, JR 3,195,148

HYGIENIC SPRAY DEVICE FOR TOILETS

Filed Dec. 12, 1963 2 Sheets-Sheet 1

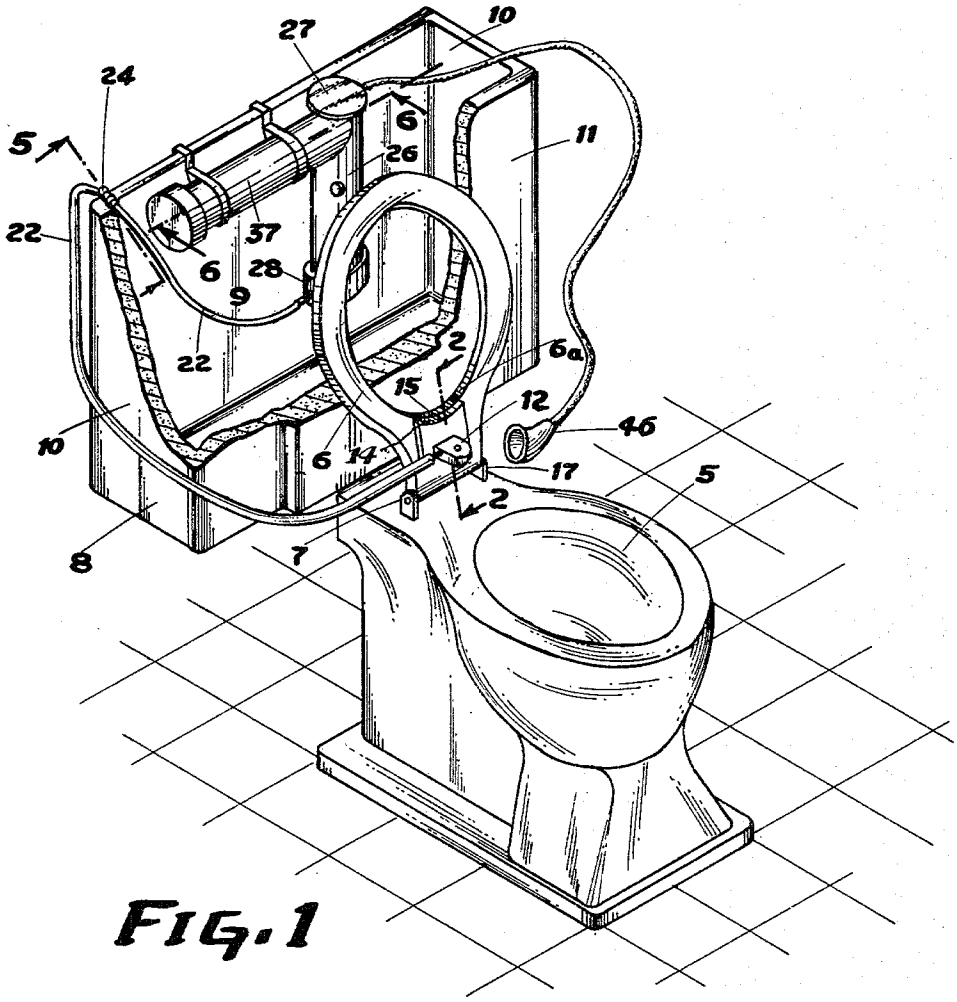

FIG. 1

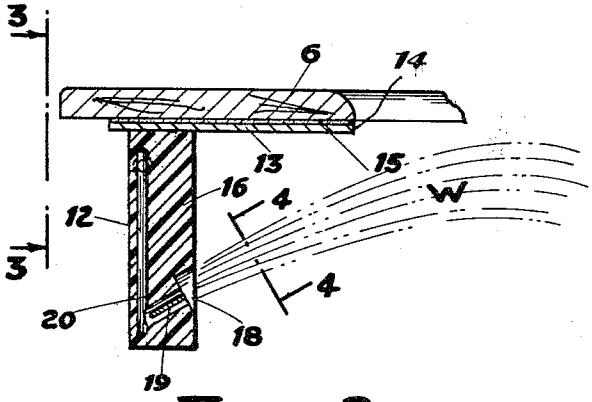

FIG. 2

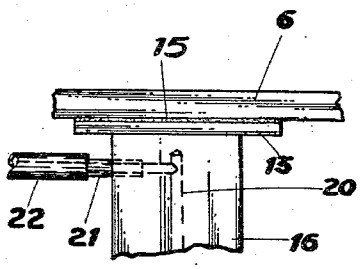

FIG. 3

INVENTOR.
HENRY M. MERKEL JR.
BY
ATTORNEY

July 20, 1965 H. M. MERKEL, JR 3,195,148

HYGIENIC SPRAY DEVICE FOR TOILETS

Filed Dec. 12, 1963 2 Sheets-Sheet 2

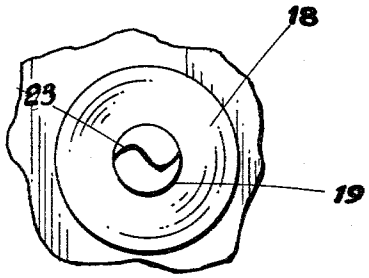

FIG. 4

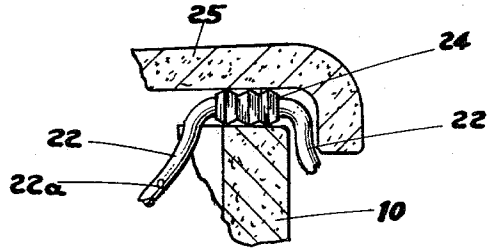

FIG. 5

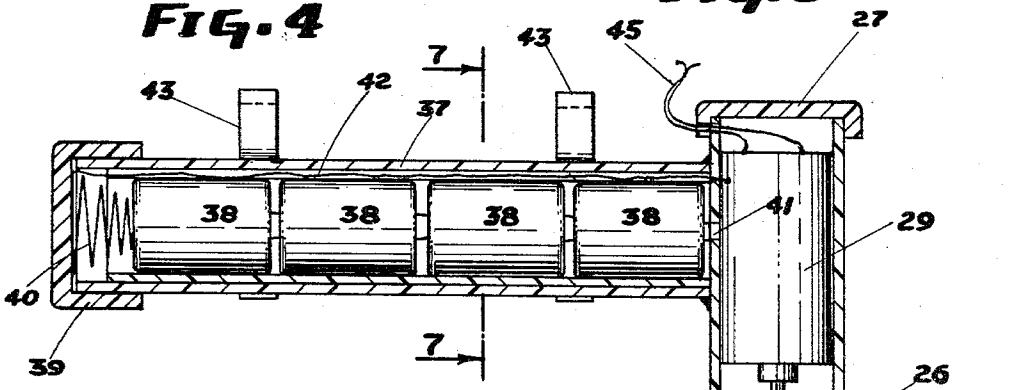

FIG. 6

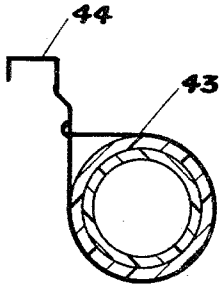

FIG. 7

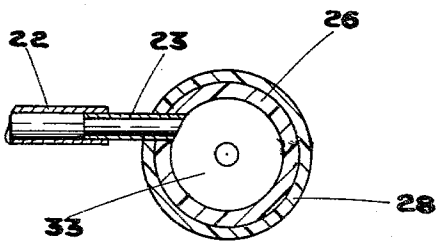

FIG. 8

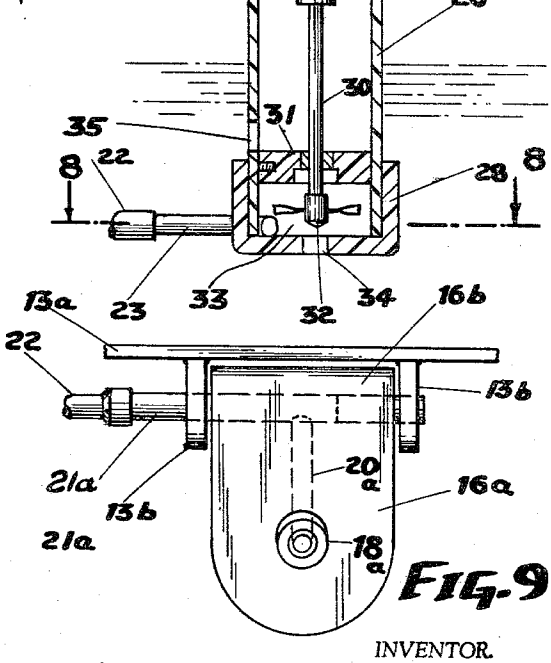

FIG. 9

INVENTOR.
HENRY M. MERKEL JR.
BY
James H. Gyles
ATTORNEY

United States Patent Office

3,195,148

Patented July 20, 1965

1

3,195,148

HYGIENIC SPRAY DEVICE FOR TOILETS

Henry M. Merkel, Jr., 716 North Road,
Boynton Beach, Fla.

Filed Dec. 12, 1963, Ser. No. 330,122
6 Claims. (Cl. 4—7)

This invention relates to a hygienic spray device for toilets and whereby to spray or wash the region of the anus.

The invention contemplates a mechanism that is disposed within the flush tank of a toilet and embodying pressurized pumping means whereby water from the flush tank is discharged from a nozzle that is detachably fixed to the bottom of the toilet seat at its rear portion and with the nozzle adapted to project an arcuate stream of water longitudinally of the commode and with such stream of water being confined into the commode so that the stream of water will not rise above the seat.

The invention further comprises a perpendicular pump housing and a right angularly disposed housing for containing dry cell batteries to actuate the pump and with the device being provided with clips that engage upon the top of the rear wall of the flush tank and also an electric wire having a push button whereby the motor may be actuated by a person sitting upon the seat for energizing the motor to pump the water from the nozzle to direct it toward the anus area of the individual spraying the device.

The invention further provides a sanitary washing mechanism for the area of the anus and whereby the anus may be cleansed.

Novel features of construction and operation of the device will be more clearly apparent during the course of the following description, reference being had to the accompanying drawings wherein has been illustrated a preferred form of the device and wherein like characters of reference are employed to denote like parts throughout the several figures.

In the drawings:

FIGURE 1 is a perspective view of a commode and a flush tank having the invention applied thereto and with the flush tank being broken away for purpose of illustration,

FIGURE 2 is a section taken substantially on line 2—2 of FIGURE 1, illustrating the rear portion of the toilet seat and the dicharge mechanism,

FIGURE 3 is a fragmentary rear elevation through the toilet seat and the discharge mechanism, taken substantially on line 3—3 of FIGURE 2,

FIGURE 4 is a fragmentary face view of the discharge mechanism, taken substantially on line 4—4 of FIGURE 2.

FIGURE 5 is a fragmentary section taken through one end of the flush tank, illustrating a ferrule to prevent the compression of water conduit,

FIGURE 6 is a central longitudinal section taken on line 6—6 of FIGURE 1, the flush tank being omitted,

FIGURE 7 is a transverse section taken substantially on line 7—7 of FIGURE 6, and

FIGURE 8 is a horizontal section taken substantially on line 8—8 of FIGURE 6,

FIGURE 9 is a front elevational view of a slightly modified form of water discharge device.

Referring specifically to the drawings, there has been illustrated a conventional commode 5, having an open seat 6, hinged upon the commode as indicated at 7. A conventional flush tank 8 is connected to the commode in the well known manner and with the flush tank having a rear wall 9, end walls 10 and a front wall 11 all being customary in a device of this nature.

Fixed upon the underside of the seat 6 is a preferably molded plastic water discharge device, indicated as a

2

whole by the numeral 12. The water discharge device embodies a flat head 13 that has its forward edge curved as indicated at 14 to conform to the curvature 6a of the toilet seat 6. The head 13 has a gummed pad 15 whereby the discharge device 12 may secured to the underside of the seat 6. The gummed pad 15 initially is provided with a peel-off covering to protect the pad 15 prior to assembly with respect to the seat 6. Depending from the head 13 is a generally rectangular body 16, formed integral with the head 15 and the lower end of the body 16 is preferably curved as indicated at 17. The body 16 is provided with an angularly disposed discharge opening 18, communicating with an angular bore 19 that communicates with a conduit opening 20. The conduit opening 20 communicates with a tubular plug 21, that has pressure engagement with a preferably plastic tube 22, to be presently described. The bore 19 is provided with a corrugated vane 23 and whereby the stream of water, indicated in FIGURE 2 at "W" is controlled, and to be ejected in a round stream and avoids the splashing of the water laterally.

The tube 22, see particularly FIGURE 1, is trained around the back of the flush tank 8 and over the bottom thereof for connection to a pump device by a tubular plug 23. The tube 22 at its point of passing over the rear wall 10 of the flush tank is preferably provided with a corrugated ferrule 24 and whereby the cover 25 of the flush tank will be prevented from compressing the tube 22 that would interfere with the flow of water therethrough.

Referring now to FIGURES 1 and 6, there has been provided a pumping device that comprises a tubular plastic pump housing 26, having an upper closure cap 27 and a lower closure cap 28. Fitted into the upper end portion of the housing 26 is an electric motor 29. The motor 29 has a depending drive shaft 30 passing through a bearing 31 for connection to a bladed impeller 32. The lower cap 28 and the bearing 31 provide a chamber 33 in which the impeller rotates. The bottom of the closure cap 28 is provided with a water inlet opening 34 whereby the water from the flush tank may be forced through the tube 22 and to the discharge device 12. The side wall of the housing 26 is also apertured at 35 to provide a drain opening for the housing 26 above the bearing 31. Also fixed to the housing 26 adjacent its upper end is a right angularly disposed elongated housing 37, constituting a housing for a plurality of batteries 38. One end of the housing 37 is fixed to the housing 26 by integral molding while the opposite end of the housing 37 is provided with a slip cap 39. The cap 39 carries a spring 40 that bears against the negative end of one battery 38. A contact 41 from the motor 29 engages the innermost battery 38 that is positive terminal. The spring 40 is electrically connected to the motor 29 by a conductor 42. The housing 26, the caps 27 and 28, the housing 37 and the cap 39 are all molded or otherwise formed of a suitable plastic material. All of the caps have a frictional water tight engagement at their respective points whereby to protect the batteries and the motor from water. Means are provided to suspend the housings 26 and 27 into the flush tank 8, comprising a pair of sheet metal clips 43. The clips are wrapped around the housing 37 at spaced apart points and carry hooked portions 44 that are adapted to have hooked engagement over the upper edge of the rear wall 9 of the flush tank and whereby the housing 37 is disposed above the water line and with the housing 26 depending into the water at a predetermined depth, preferably along the line indicated in FIGURE 6. The motor 29 is actuated by two-wire conductor 45 that is trained outwardly beneath the cover 25 and extends downwardly where it is provided with a switch 46 that terminates adjacent to the commode and whereby the operator may control the actuation of the device.

In the use of the device, the motor and battery casings are hooked upon the rear wall of the flush tank. The tube 22 leads from the bottom of the impeller chamber 33 to be connected to the plug 21 of the discharge member 12. The discharge member 12 is then attached to the bottom of the toilet seat 6 by first peeling off protective paper and then pressing the head 13 against the bottom of the seat with its curved edge registering with the curve 6a of the toilet seat opening. Thus, when the toilet seat is swung downwardly for use, the discharge device swings downwardly into the opening of the commode then, the switch 46 is actuated, causing the motor 29 to drive the impeller, forcing a stream of water "W" from the opening 18 in an arcuate path that is calculated to engage the anus area of the user. The switch 46 is maintained closed so long as the cleansing operation is necessary and upon opening of the switch 45, the motor will be deactivated and water will cease to flow from the opening 18. The time of actuation is normally relatively short and only sufficient to cleanse the anus area consequently, there is relatively little drain upon the batteries 38 and the device will be operative for a relatively long time. The force of the water being discharged from the opening 18 is in an arcuate path upwardly to engage the anus area but the stream of water is not sufficiently strong to rise above the seat 6. The tube 22 is provided with a relatively small aperture 22a to prevent siphoning of the water from the tank.

Referring now to FIGURE 9, there has been illustrated a modified form of discharge device for the water and wherein the discharge body 16a is hingedly mounted with respect to the head 13a and whereby the discharge body 16a may be moved by the individual to control the direction of the spray of water. For this purpose, the head 13a is provided with a pair of spaced apart flanges 13b that have been apertured to receive the plug 21a and with the plug 21a frictionally engaging the apertures of the flanges. One end of the plug 21a is closed and with the plug communicating with the port 20a that communicates with the discharge opening 18a as in the first form of the invention. The body 16a is rounded at its top as indicated at 16b to provide a clearance for the swinging movement of the device. The body 16a may thus be frictionally held upon the plug 21a and adjusted to any angular position.

It will be apparent from the foregoing that a very novel cleansing or hygienic spray device has been provided. The structure is relatively simple, easily assembled with respect to conventional commodes and flush tanks presently in use, is cheap to manufacture, is strong, durable and most effective as a hygienic spray device for the washing or cleansing the area of the anus of the user. The mechanism requires no screws or other fastening devices for attachment to the flush tank and the toilet seat. The parts having engagement with the flush tank are all formed of plastic and the motor 29 is adequately protected from the water although the motor housing is only engaged into the water at a predetermined point represented in FIGURE 6 and with the battery casing of the motor being disposed well above the surface of the water.

It is to be understood that the invention is not limited to the precise construction shown, but that changes are contemplated as readily fall within the spirit of the invention as shall be determined by the scope of the subjoined claims.

I claim:

1. A flush device of the character described that is associated with a commode and a water flush tank, the commode having a hingedly connected seat, a water discharge device that is fixed to the bottom of the seat at its rear portion and with the flush device being cut away to conform to the curvature of an opening of a seat, a pump device that is supported within the flush tank and that depends into the water, the pump device embodying an electric motor and an impeller, a housing that is supported upon a rear wall of the flush tank and with the housing supporting a plurality of batteries, a tubular conduit that is connected to the pump at one end and with its opposite end being connected to the water discharge device, an electric connector leading from the motor to a point adjacent the commode and a switch carried by the conductor whereby an individual may energize the pump for forcing a stream of water from the discharge device to flush the anus area.

2. A flush device of the character described for use with a commode having a hingedly connected open seat and a water flush tank, a pump housing having a motor in its upper end, a shaft driven by the motor, a bearing for the shaft, a chamber formed in the lower end of the housing and a rotary impeller disposed within the chamber, a second housing that is fixed to the pump housing at a right angle thereto, clip devices for supporting the housings upon the rear wall of the flush tank, a plurality of batteries disposed within the second named housing for energizing the motor, a flexible conduit that is connected to the impeller chamber at one end and at its opposite end is connected to the discharge device, an electrical conductor that is connected to the motor at one end and with its opposite end being provided with a switch device whereby the motor may be energized by the user for directing a stream of water from the discharge device to flush the anus area of the user, the said flush device being fixed upon the bottom of the seat at its rear portion and with one marginal edge being contoured to conform to the curvature of the opening of the seat, the said conduit being trained over the rear wall of the flush tank to pass beneath the flush tank for coupling engagement to the discharge device.

3. The structure according to claim 2 wherein the motor housing and the battery housing are joined together at a right angle and with the lower end of the motor housing depending into the water of the flush tank, the said battery housing being disposed above the water of the flush tank, the said housings being formed of molded plastics, a friction cap engaging the upper end of the motor housing, a friction cap engaging the lower end of the motor housing and a friction cap engaging one open end of the battery housing, the caps also being formed of plastic and with the lower cap of the motor housing being provided with a central aperture for receiving water from the flush tank for discharge through the conduit.

4. The structure according to claim 2 wherein the discharge device is formed of plastic, the discharge device having a flat head portion that is provided with a gummed surface whereby the discharge device adheres to the bottom of the seat, the head portion being provided with a depending block that is angularly apertured upon its discharge side for ejecting a curved spray of water, the said block having a central bore and a plug at one side upon which the conduit is engaged, the aperture upon the discharge side being relatively large and communicating with an axial bore of reduced diameter that communicates with the first named bore and a corrugated vane disposed in the reduced bore for controlling the stream of water, the said discharge device being movable with the seat and whereby the discharge device is disposed within a bowl of the commode when the seat has been swung to an operative position.

5. The structure according to claim 2 wherein the conduit extends over the top of a wall of the flush tank, the conduit at its point of passing over the wall being provided with a corrugated ferrule whereby a cover for the flush tank is prevented from compressing the conduit, the said conduit at a point within the flush tank and above the water being provided with a relatively small aperture whereby to prevent a siphoning of the water.

6. The structure according to claim 4 wherein the dis-

charge device has a head portion that is connected to the underside of the seat of the commode, the head portion being provided with a pair of spaced apart flanges that are apertured to receive a tubular plug and with the flanges being slotted for creating a frictional contact with the plug, the said discharge device embodying a block that is apertured transversely to receive the tubular plug, the said discharge device having a discharge opening in its forward face and with the opening being angularly disposed for discharging an arcuate stream of water upwardly to contact the anus area of the user, the said discharge device being swingable upon the tubular plug whereby to control the angle of discharge for the water.

References Cited by the Examiner

UNITED STATES PATENTS

1,787,481	1/31	Kellogg	4—7
2,371,923	3/45	Sanford et al.	4—213
2,808,196	10/57	Williams	230—117
2,985,890	5/61	Baither	4—213
3,115,842	12/63	Dodge	103—87
3,117,526	1/64	Zimmerman	103—87

LAVERNE D. GEIGER, *Primary Examiner.*

E. V. BENHAM, SAMUEL ROTHBERG, L. J. LENNY, *Examiners.*