US00D403681S

United States Patent [19]

Lam

[11] Patent Number: Des. 403,681

[45] Date of Patent: **Jan. 5, 1999

[54] **HEADPHONE**

[76] Inventor: **Calvin Lam**, 14415 Don Julian Rd., City of Industry, Calif. 91746

[**] Term: **14 Years**

[21] Appl. No.: **84,034**

[22] Filed: **Feb. 23, 1998**

[51] **LOC (6) Cl.** **14-01**

[52] **U.S. Cl.** **D14/223**; D14/206

[58] **Field of Search** D14/137, 138, D14/140, 142, 147, 148, 205, 206, 223, 249; 181/129, 135; 379/430, 433; 381/183, 187, 188

[56] **References Cited**

U.S. PATENT DOCUMENTS

D. 231,613	5/1974	Sarber .	
D. 339,355	9/1993	Burris et al.	D14/249
D. 361,066	8/1995	Langhorn et al. .	
D. 364,617	11/1995	Fitzgerald	D14/206 X
D. 375,313	11/1996	Jensen et al. .	
1,354,524	10/1920	Timmons .	
2,566,313	9/1951	Cates .	
3,280,273	10/1966	Flygstad et al. .	
4,654,883	3/1987	Iwata .	
4,754,484	6/1988	Larkin et al.	379/430
5,113,428	5/1992	Fitzgerald .	
5,457,751	10/1995	Such .	
5,613,222	3/1997	Guenther .	
5,673,438	10/1997	Lambert .	

Primary Examiner—Ted Shooman
Assistant Examiner—Nanda Bondade
Attorney, Agent, or Firm—Raymond Sun

[57] **CLAIM**

The ornamental design for the headphone, as shown and described.

DESCRIPTION

FIG. **1** is a perspective view of a headphone showing my new design;
FIG. **2** is a perspective view of the headphone of FIG. **1**;
FIG. **3** is a front elevational view of the headphone of FIG. **1**;
FIG. **4** is a rear elevational view of the headphone of FIG. **1**;
FIG. **5** is a bottom plan of the headphone of FIG. **1**;
FIG. **6** is a top plan view of the headphone of FIG. **1**;
FIG. **7** is a left side elevational view of the headphone of FIG. **1**; and,
FIG. **8** is a right side elevational view of the headphone of FIG. **1**.
The broken line showing of the human head on FIG. **1**, and the wire on FIGS. **1–8** is for illustrative purposes only and forms no part of the claimed design.

1 Claim, 5 Drawing Sheets

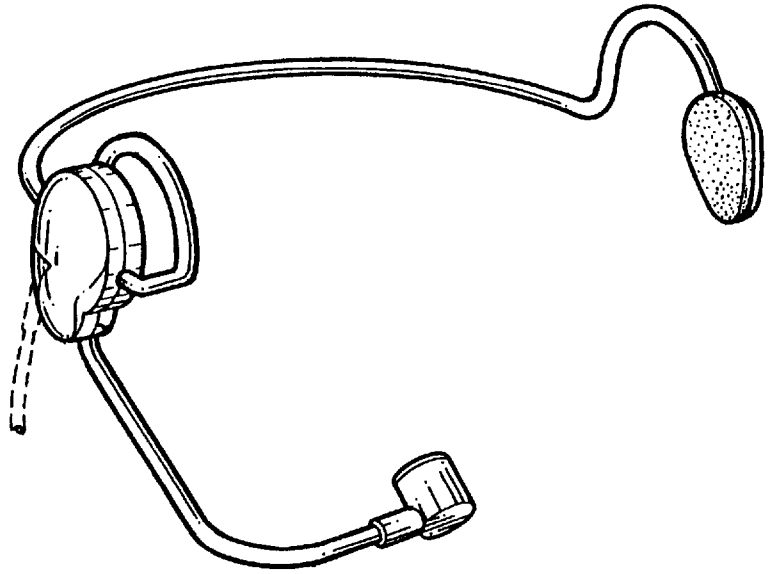

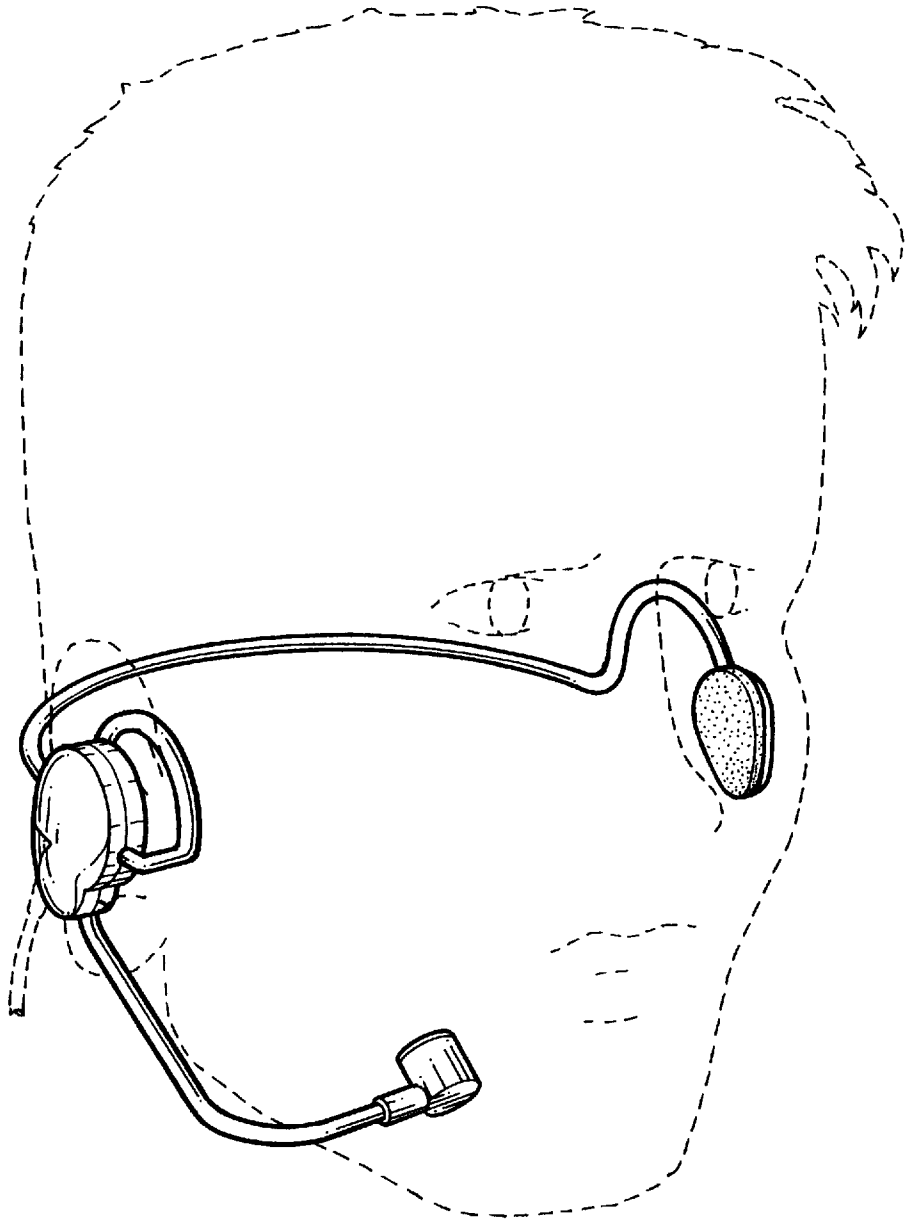

FIG. 1

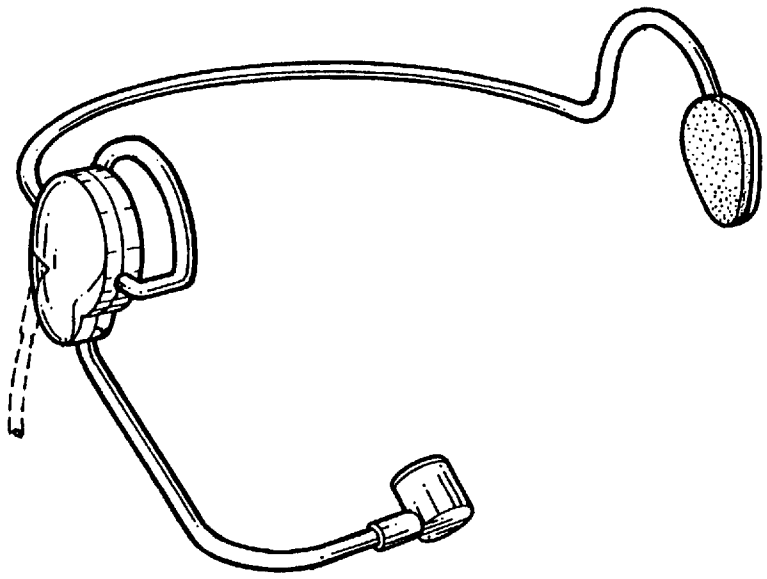

FIG. 2

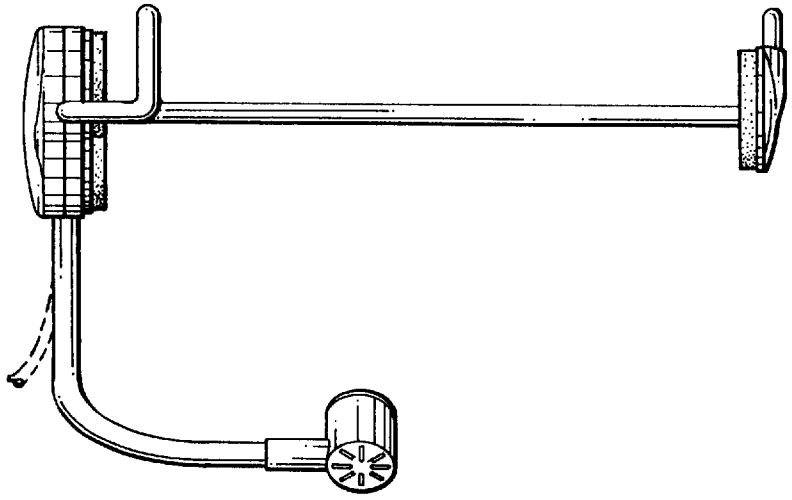

FIG. 3

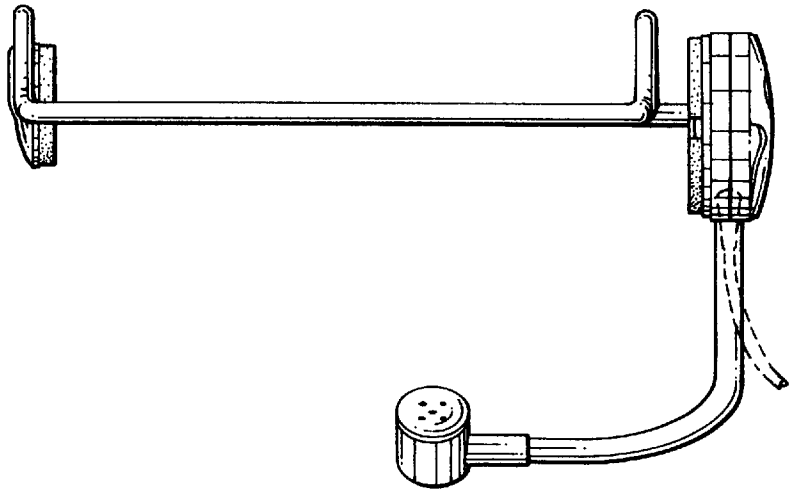

FIG. 4

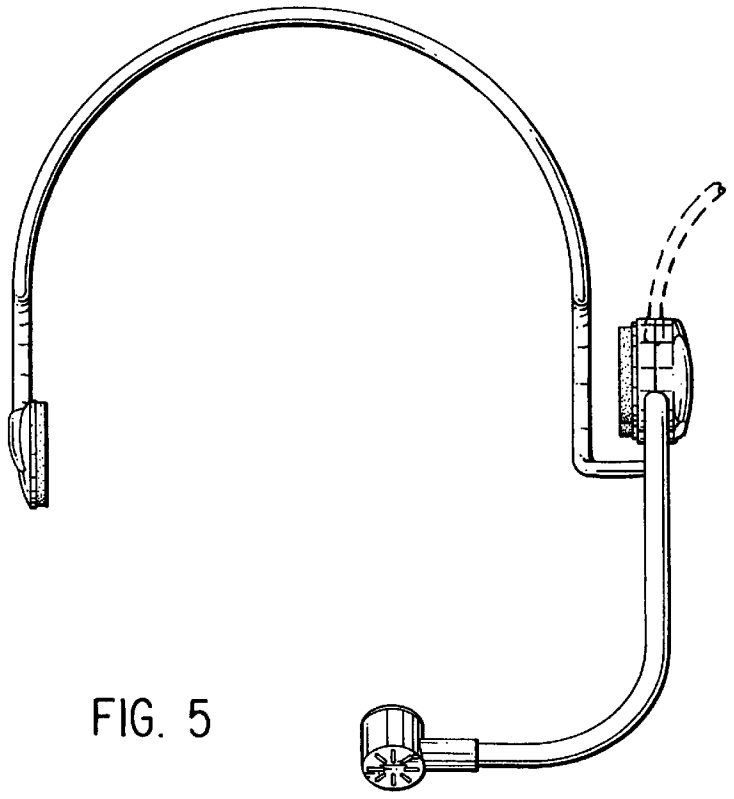

FIG. 5

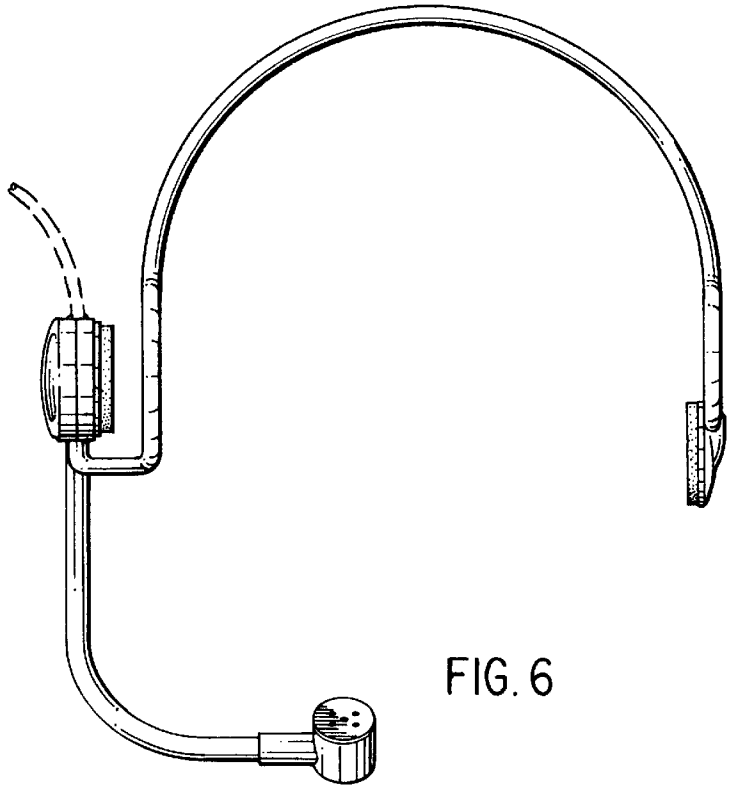

FIG. 6

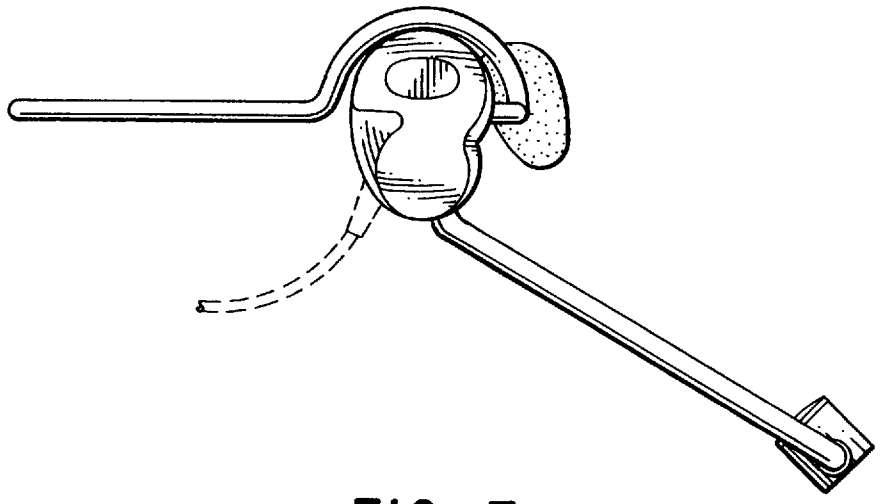

FIG. 7

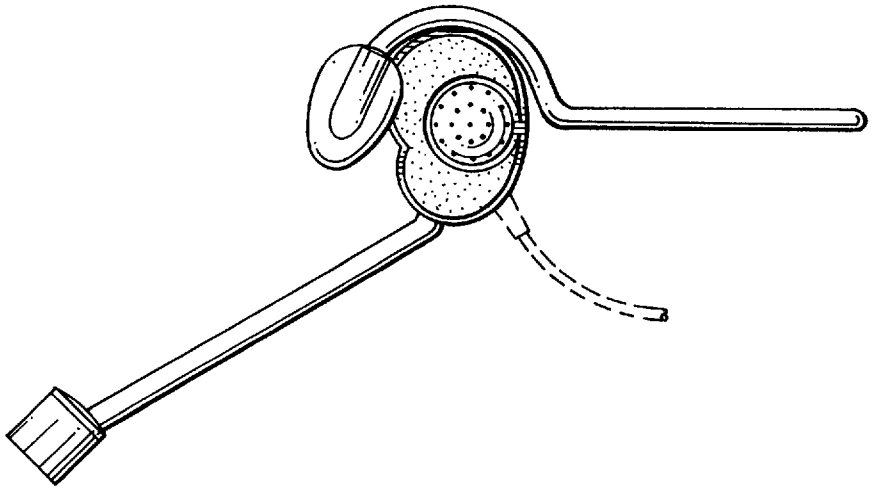

FIG. 8