Office de la Propriété Intellectuelle du Canada
Un organisme d'Industrie Canada

Canadian Intellectual Property Office
An agency of Industry Canada

CA 2199138 C 2007/02/20

(11)(21) 2 199 138

(12) BREVET CANADIEN
CANADIAN PATENT

(13) C

(86) Date de dépôt PCT/PCT Filing Date: 1995/01/05
(87) Date publication PCT/PCT Publication Date: 1996/03/14
(45) Date de délivrance/Issue Date: 2007/02/20
(85) Entrée phase nationale/National Entry: 1997/03/10
(86) N° demande PCT/PCT Application No.: EP 1995/000035
(87) N° publication PCT/PCT Publication No.: 1996/007554
(30) Priorité/Priority: 1994/09/09 (DEP 44 32 132.5)

(51) Cl.Int./Int.Cl. *B60B 7/01* (2006.01)

(72) Inventeur/Inventor:
BAUMGARTNER, HEINRICH, DE

(73) Propriétaire/Owner:
BBS MOTORSPORT & ENGINEERING GMBH, DE

(74) Agent: CARTON, JOHN K.

(54) Titre : ROUE D'AUTOMOBILE POURVUE D'UN DISPOSITIF ANNULAIRE
(54) Title: MOTOR VEHICLE WHEEL WITH AN ANNULAR DEVICE

(57) Abrégé/Abstract:
Motor vehicle wheels are often damaged because the driver contacts the curb with the outer side of the wheel during parking. On contacting the curb, the tire, which generally protects the vehicle owing to its greater width, is often so greatly distorted that the outside of the wheel rim is crushed against the curb and is thereby damaged. A motor vehicle wheel (11) is produced with an annular device (13) which at least partly covers the visible side of the wheel rim (18). As the joint between the annular device (13) and the wheel is releasable, the annular device (13) can be easily changed after suffering damage and the wheel (11) once more looks as good as new.

ABSTRACT

Motor vehicle wheels are often damaged because the driver contacts the curb with the outer side of the wheel during parking. On contacting the curb, the tire, which generally protects the vehicle owing to its greater width, is often so greatly distorted that the outside of the wheel rim is crushed against the curb and is thereby damaged. A motor vehicle wheel (11) is produced with an annular device (13) which at least partly covers the visible side of the wheel rim (18). As the joint between the annular device (13) and the wheel is releasable, the annular device (13) can be easily changed after suffering damage and the wheel (11) once more looks as good as new.

The invention concerns an automobile wheel in accordance with the introductory clause of Claim 1.

A frequent cause of damage to automobile wheels is that the driver brings the outside of the tire wheel in contact with the curb as he parks the automobile, particularly if the angle between the curb and the tire wheel is acute. The tire, which generally protects the automobile wheel due to its greater width, is often deformed by this contact with the curb to such a degree that the outside of the rim flange scraps against the curb and is thereby damaged. It is, of course, most annoying if the rim flange and the appearance of the wheel are impaired as a result of such an incident, particularly in the case of an especially valuable wheel.

For the avoidance of damages to this type to the rim flange, a ring-shaped device is known from WO-A-93/07012 which can be applied to the exposed side of a rim flange and which partially covers it. The device which is configured as a protective body is fastened to the rim flange with an adhesive substance. It is also known that the protective body can be fastened in a groove- or channel-shaped depression in the rim flange with at least one locking element.

The glued configuration, however, has the disadvantage that it is necessary to apply the adhesive material before the protective body is applied to the rim flange. This is time consuming and a large amount of work time is required during the replacement of a damaged protective body in order to free the rim flange of old adhesive and to apply new adhesive. In

[Stamp: CHANGED PAGE]

addition, the adhesive must have specific characteristics in order to be able to absorb the forces which act on the protective body in operation and in order to be able to withstand the various weathering conditions. The locking elements, which engage in a depression in the rim flange have the disadvantage that a costly manufacture of the rim flange is required and use of the rim without protective elements is aesthetically unattractive.

The task of the invention is to avoid these disadvantages and to provide a vehicle wheel for which damage to the rim flange can be avoided in a simple, cost-effective manner.

This task is accomplished by the characterizing part of Claims 1 and 9. By providing on the automobile wheel a ring-shaped device which covers at least the outer side of the rim flange, the rim flange is no longer damaged upon contact with the curb, but instead the ring-shaped device, in particular its outward-directed side, the exposed side. Since the union between the ring-shaped union [Translator: "Verbindung" (= union) probably should have been "Vorrichtung" (= device)] and the wheel can be separated, the damaged device can be simply exchanged for a new one. The wheel remains like new and its resale value remains undiminished.

The invention is of special interest, naturally, for wheels of the higher price category such as aluminum wheels. The appearance is especially important in the case of such wheels which are considered status symbols, so scratches or damage to the outer side of the rim flange are particularly disturbing to the owner. If the automobile along with the wheel are resold, the wheel does not have to be polished and painted. The entire automobile profits from the quasi-new wheel for the wheels are known to be the legs of the auto.

An additional advantage of the invention consists of the fact that the manufacturing costs of the vehicle wheel is reduced since additional processing steps which are for optical purposes such as polishing and painting the part of the wheel which is covered by the device can be dispensed

[Stamp: CHANGED PAGE]

with.

The advantageous unions between the device and the wheel are achieved in accordance with the characteristics of Claim 1 if the means of fastening at least partially clasp the upper or lower edge of the rim flange, in particular if the edge or edges of the rim flange and the means of fastening are configured such that the device can be loosened from the rim flange only by a force acting essentially parallel to the axis of rotation of the wheel in the direction of the outside of the wheel. The advantageous unions can be achieved in the case of a two-part edge in accordance with Claim 9 if the fastening means reaches at least partially between the rim flange and the wheel center.

It is further possible for the fastening means to advantageously engage in a ring groove on the outer side of the rim flange or of the wheel disk. The ring groove and the fastening means should be formed such that an unintended loosening of the wheel-device union is prevented. Additional embodiments are found in Claims 4 through 8.

The additional developments in accordance with Claims 5 and 6 are for the purpose of improving the union between the automobile wheel and the device and preventing unintended loosening.

The embodiment in accordance with Claim 10 prevents additional moments on the wheel or unbalanced state from occurring as a result of the device.

In general, the exposed side of the device can be variously shaped. A flat exposed side or one bowed outward in accordance with Claims 11 and 12 have proven advantageous, although it is also possible to configure the exposed side of the device to come together sharply toward the outside or the inside, to be curved inward, or to otherwise shaped, according to taste.

[Stamp: CHANGED PAGE]

The back side of the device should in accordance with Claim 13 essentially fit onto the outside of the rim flange, either with the entire surface of the back side or in the case of a mildly concave back side, it should fit against it at least at the extreme ends. The shape of the outside of the rim flange should essentially correspond to the to the shape of the rear side of the device.

In order for the rim flange not to be damaged in the event of contact with a curb, it is advantageous the material employed is thick enough between the exposed side and rear side of the device so that it exceeds the depth of a scratch. Preferably the thickness of the material is between 1 mm and 5 mm. Approximately 2 mm is particularly preferred.

In the additional developments in accordance with Claims 15 and 16, both the ease of replacement of the device and a union between the wheel and the ring-shaped device which is secured against an unintended loosening of the device is achieved.

The materials in accordance with Claims 17 and 18 have proven particularly advantageous for the manufacture of the device. The use of stainless steel has the advantage that the surface does not have to be given an additional protective treatment and the shine of the surface does not become reduced over time. Devices made of aluminum are relatively light in weight. A still lighter material is plastic, which in addition offers the advantage that the ring-shaped devices of this material are easy and inexpensive to manufacture.

Various processes can be used in the manufacture of the ring-shaped devices. The aluminum or stainless steel devices are Preferably drawn pieces, in particular deep-drawn pieces. However, it is also possible for them to be stamped or turned on their outer or inner radius. Of course it is also possible to turn the device from the solid blank. In addition, band material may be drawn from a coil. This can be brought through a roll forming line, shaped into a ring, and the ends, which initially are separated, can be jointed together with a material bond.

[Stamp: CHANGED PAGE]

If plastic is used as material, the injection molding process is especially suitable.

In order to adapt the device to the esthetic requirements and to protect the surface, it is advantageous for the device to be treated in accordance with Claim 19.

The esthetic requirements of the consumer are taken into consideration, among other things, by polishing or diamond turning the exposed side of the device. Color variants can be achieved through painting or electrochemical processes.

As already stated, the device is advantageously snapped into or onto the wheel. However, it is also possible for it to be screwed or otherwise fastened to the wheel. It can also be glued on, if an adhesive is used which can be removed under specific conditions.

It is also possible to use the device in the form of a foil such as aluminum foil which is adhered to the rim flange.

In general, it is advantageous for the fastening means to facilitate an interlocking and/or friction-based union between wheel and device in accordance with Claim 20.

As a result of the essentially ring-shaped or continuous fastening means in accordance with Claim 21, it is possible to achieve a good interlocking or friction-based bond between device and wheel.

It is also possible, however, to use fastening means which are not ring-shaped or continuous but rather are arranged at certain intervals on the device, for example various individual clip devices or holes with screws.

These individual fastening means can, however, also be tabs arranged on the device, for

[Stamp: CHANGED PAGE]

example of metal, which are bent over the outer edge of the rim flange and are pressed against the inner side of the rim flange by tire pressure. A device of this kind is preferably mounted with the individual tabs on the wheel without the tire or with reduced tire pressure.

It is generally necessary for the fastening means to be arranged on the device or to be joined to it in such a manner that no unbalanced state occurs on the automobile wheel and the device cannot unintentionally loosen.

In multipart wheels, it is also possible for the fastening means the fastening means [Translator: "die Befestigungsmittel" appears to be erroneously repeated in the original] to also have holes which are aligned with the holes in the wheel center and the rim so that the device can be fastened with the screws with which the wheel center and the rim are bolted together.

Claims 24 through 27 describe preferred embodiments for a device for multipart wheels with respect to the width of the exposed side of the ring-shaped device which is calculated from the difference between exterior radius $r_{exterior}$ and the interior radius $r_{interior}$. The width of the exposed side of the device is preferably smaller than the interior radius of the device so that the wheel is not covered by the device. Through the additional development in accordance with Claim 4, both the required protection of the rim flange against damage and a reduced degree of covering of the wheel is achieved so that the esthetic value of the wheel is not impaired. If the percentage of the surface covered by the device in relation to the entire surface, there is a maximum degree of coverage of 36%. Coverage degrees of less than 25% are especially preferred. As a result of the reduced width of the device, less material is also necessary for its manufacture, which is favorable with respect to cost and also reduces the quantity of waste or of material to be recycled. The air circulation at the wheel is not negatively influenced by the ring-shaped configuration of the device.

The device of the automobile wheel is used in particular to protect the wheel rim. An

additional application consists of covering alphanumeric information applied to the exposed side of the rim flange such as serial numbers. In this way, the alphanumeric information is easily accessible without reducing the esthetic value of the wheel. At the same time, theft protection or recovery is enhanced.

Generally all possible types of rims, such as drop-base, stepped, or flat-base rims, can be used for the wheel in accordance with the invention. The invention can be used with both single-part and multipart wheels.

Additional advantages and embodiments are contained int he following description with the aid of drawings as follows:

Figure 1: View from above of the exposed side of a portion of an automobile wheel

Figure 2: A side view of the automobile wheel from Fig. 1 in the area of the rim

Figure 3: The area of the rim flange with the ring-shaped device from Fig. 2

Figure 4: A side view of a second and a third embodiment

Figure 5: A side view of a fourth and a fifth embodiment with a multipart wheel

Fig. 1 shows a portion of the wheel center 12 and the ring-shaped device 13 of the automobile wheel 11 with the axis of rotation R. The wheel center 12 has a spoke-like configuration. The inside diameter $r_{interior}$ and the outside radius $r_{exterior}$ define the width 25 of the exposed side 21 of the ring-shaped device 13. The device 13 obscures the rim and rim flange.

In Fig. 2 and the enlargement in Fig. 3, it can be seen that the device 13 covers the outside 23 of the rim flange 18. In Fig. 2, the rim 16 is depicted with the rim flange 18, the rim shoulders 19, and the rim base 17. The tire 14 is also indicated schematically. On the upper

[Stamp: CHANGED PAGE]

side of the rim flange 18, there is a notch 24 between two shoulders 26, 27.

The device 13 has fastening means which are configured as two anchor ribs 28, 29 on the upper and lower ends of the device 13. The anchor ribs 28, 29 clasp the shoulder 26 at the upper end of the rim flange 13 and the shoulder 31 at the lower end of the rim flange 13 along the entire circumference of the wheel. Because the anchor ribs 28, 29 completely clasp the shoulders 26, 31 and the rear side 22 of the device 13 fits onto the side of the rim flange which faces outward 23, an interlocking or friction-based union is achieved. In order to release the union, a force acting essentially parallel with the rotation axis R must be applied. As a further improvement of the union between the rim flange 18 and the device 13, the lower anchor rib 29 also has a tongue 32. In this embodiment, the fastening means 28, 29 and the device 13 form a unit.

The outward-facing surface 34 of the anchor rib 28 extends as a quasi elongation on the inner side 33 of the rim flange 18 which drops from the shoulder 27.

Fig. 4 shows a second and a third embodiment of the device. The exposed side 21 and the rear side 22 of the device are essentially parallel to each other. At its two extreme ends 36, 37, the device, which is slightly concave, tapers. An anchor rib 38 which is essentially perpendicular to the rear side 22 of the device 13 and is joined to the device 13 is provided as a fastening means. The anchor rib 38 has a triangle-shaped thickening 39 on its end. The desired anchoring is achieved by means of the outward-facing side 43 of the triangle and by the opening 42 which expands as a result of the shape of the lower side of the rim flange 18 and the upper side of the wheel center 12. The seating is additionally improved by the slightly concave shape of the device 13.

In Fig. 4, the device 13 does not completely cover the exposed side of the rim flange 23. However, because the exposed side 21 of the device 13 stands further to the outside than the

[Stamp: CHANGED PAGE]

outer side 23 of the rim flange 18 and thus the first rigid surface in a contact with the curb with which the curb comes in contact is the exposed side 21 of the device, this embodiment also prevents damage to the exposed side 23 of the rim. The thickness of the device 13 is 4 mm. A portion of the device also extends over the outer side 41 of the wheel center.

In the embodiment also represented in Fig. 4, the anchor rib 38 with thickening 39 is configured similar to a split dowel. The anchor rib 38 is comprises of an upper and a lower part, between which there is a slot which is indicated in Fig. 4 with broken lines.

In a further embodiment, which is not depicted, the anchoring is additionally improved through the lower side of the rim flange and the upper side of the wheel center each having surface which corresponds to the outward-facing surface of the triangle against which the surface 43 rests.

In a further embodiment, the device has tabs for fastening similar to the anchor rib in fig. 3. These tabs do not clasp the upper end of the rim flange along the entire circumference of the rim flange 18 as in Fig. 3, but rather they are arranged essentially equidistant along the outer circumference of the device. During installation of the device, the these individual tabs stand out approximately perpendicular to the exposed side of the device toward the rear. When being installed on a wheel on which the tire is not mounted or a wheel with reduced tire pressure, they are bent around in such a manner that they essentially lie against the inner side of the rim flange. After the tire is mounted, the tabs are pressed against the inner side of the rim flange by the tire pressure. In this embodiment, the upper end of the rim flange should not have a notch in accordance with Fig. 3, but instead should be configured as in Fig. 4. Of course the further the tabs project into the area of the inner side of the rim flange in which the tire presses the tabs against the rim flange, the better the attachment is.

Fig. 5 shows a side view of part of a multipart wheel in which the wheel center 12 is screwed

[Stamp: CHANGED PAGE]

to the rim 16. For this purpose, the wheel center 12 and the rim 16 have holes 42, 45. The upper area of the device 13 is configured in accordance with Fig. 3. The tongue 32 is brought along between the wheel center 12/rim 16 clamping surface and also has a hole 44. The hole 44 in the tongue 32 is aligned with the hole 42 through the wheel center and the threaded blind hole 45 in the flange 16. In this embodiment, the device 13 is fastened with the same screws 42 which are used for fastening the rim 16 to the wheel center 12.

In a further embodiment, also depicted in Fig. 5, the tongue is somewhat shorter and also does not have any holes. However, it should preferable extend over the knee 46 to about the location 47 in order that the desired grip is achieved.

[Stamp: CHANGED PAGE]

THE EMBODIMENTS OF THE INVENTION IN WHICH AN EXCLUSIVE PROPERTY OR PRIVILEGE IS CLAIMED ARE DEFINED AS FOLLOWS:

1. Automobile wheel (11) with a rim (16) and a wheel center (12), which may be in the form of spokes, with a ring-shaped device (13), which device (13) at least partially covers an exposed side (23) of a rim flange (18), and a union between the ring-shaped device (13) and the wheel (11) can be loosened and with at least one fastening means (28, 29, 32) characterized by the fact that said fastening means (28, 29, 32) comprises a first portion (29, 32) that at least partially clasps a lower edge of said rim flange (18) and second portion (28) that at least partially clasps an upper edge of said rim flange (18).

2. Automobile wheel in accordance with claim 1 characterized by the fact that said second portion (28) of said fastening means engages in a ring groove on the outer side of the rim flange (18).

3. Automobile wheel in accordance with claim 1 characterized by the fact that said first portions (29, 32) of said fastening means engages in a ring groove in the wheel center (12).

4. Automobile wheel in accordance with claim 1 characterized by the fact that the fastening means (28, 29, 32) clasp at lease an outer diameter maximum at the upper end of the rim flange (18) and/or at least an inner diameter minimum at the lower edge of the rim flange (18).

5. Automobile wheel in accordance with claim 1 characterized by the fact that a notch (24) is provided at the upper side of the rim flange (18).

6. Automobile wheel in accordance with claim 1 characterized by the fact that at least portions of the upper and/or lower edge (26, 31) of the rim flange (18) are formed in such manner that the fastening means (28, 29) can be snapped on.

7. Automobile wheel in accordance with claim 1 characterized by the fact that fastening means (28, 29, 32) for a multipart wheel (11) are brought along at least partially between the clamping surface of the wheel center (12) and the rim (16).

8. Automobile wheel in accordance with claim 1 or claim 7 characterized by the fact that the fastening means (32) have holes (44) which are aligned with holes (42) in the wheel center (12) and/or holes (45) in the rim (16) so that the device (13) can be screwed to the wheel center (12) and/or the rim (16).

9. Automobile wheel in accordance with claim 1 characterized by the fact that the device (13) is essentially radially symmetrical.

10. Automobile wheel in accordance with claim 1 characterized by the fact that an exposed side of the device (13) is essentially flat.

11. Automobile wheel in accordance with claim 1 characterized by the fact that the exposed side (21) of the device (13) is bowed outward.

12. Automobile wheel in accordance with claim 1 characterized by the fact that the rear side (22) of the device (13) essentially lies against the outside (23) of the rim flange (18).

13. Automobile wheel in accordance with claim 1 characterized by the fact that the thickness of the material of the device (13) is greater than the depth of scratches.

14. Automobile wheel in accordance with claim 1 characterized by the fact that device (13) can be snapped onto or into or screwed to the wheel (11).

15. Automobile wheel in accordance with claim 14 characterized by the fact that device can be snapped on or in without reducing the air pressure of a tire.

16. Automobile wheel in accordance with claim 1 characterized by the fact that device (13) is at least essentially made of plastic.

17. Automobile wheel in accordance with claim 1 characterized by the fact that the device (13) is at least essentially made of stainless steel or aluminum.

18. Automobile wheel in accordance with claim 1 characterized by the fact that the device (13) is at least partially painted, chromed, galvanized, polished or diamond turned.

19. Automobile wheel in accordance with claim 1 characterized by the fact that fastening means (28, 29, 32, 38, 39) can be joined to the wheel (11) with interlocking or friction-based bond.

20. Automobile wheel in accordance with claim 1 characterized by the fact that fastening means (28, 29, 32, 38, 39) are essentially ring-shaped and/or continuous.

21. Automobile wheel in accordance with claim 1 characterized by the fact that the device is an endless, smooth, uninterrupted ring.

22. Automobile wheel in accordance with claim 1 characterized by the fact that perpendicular to an exposed surface (21) of the device is at least essentially parallel to the geometric middle axis of the wheel (11).

23. Use of the ring-shaped device (13) in accordance with any one of claims 1 to 22 to cover alphanumeric information.

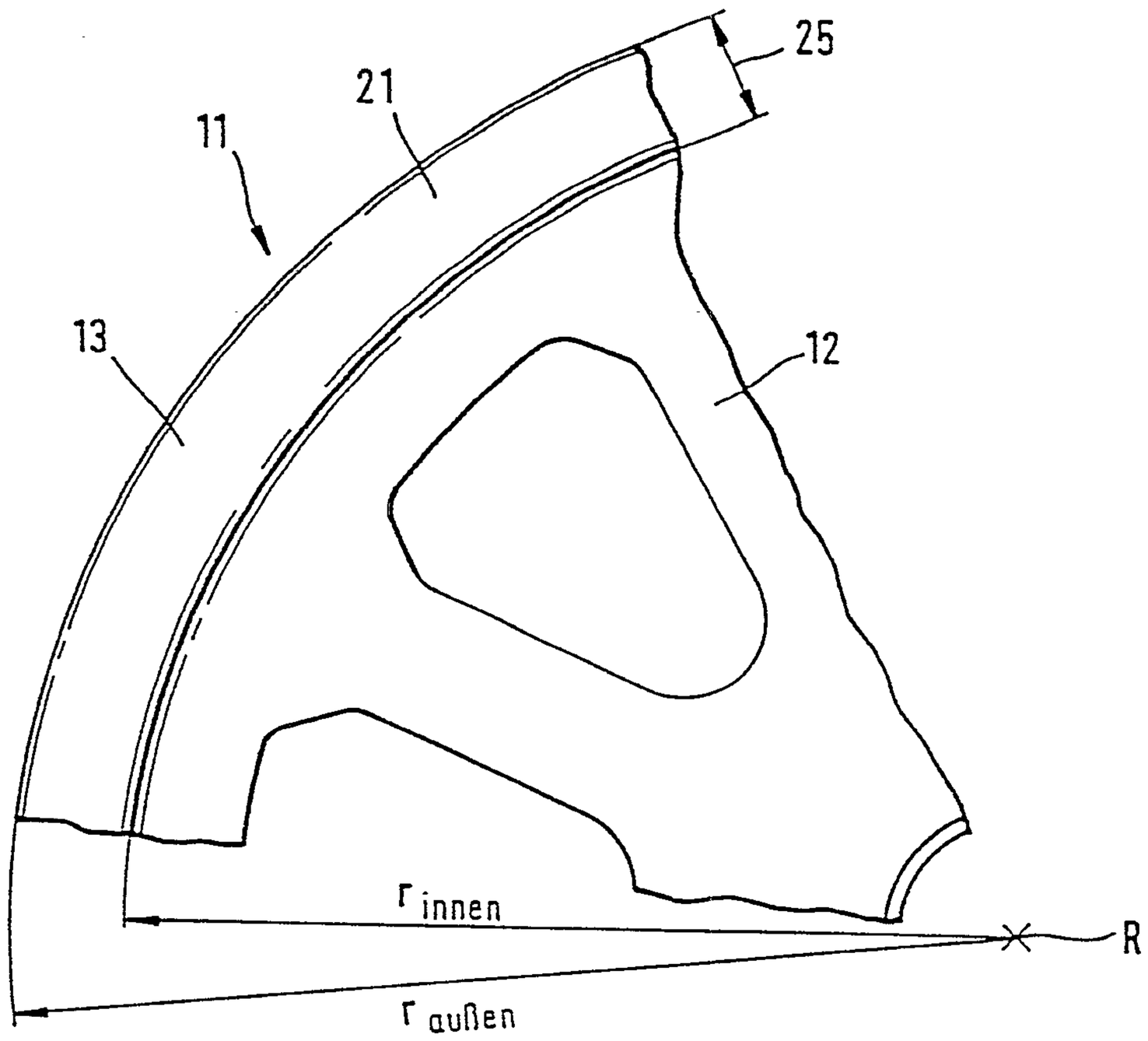

Fig.1

MOFFAT & CO.

Fig. 2

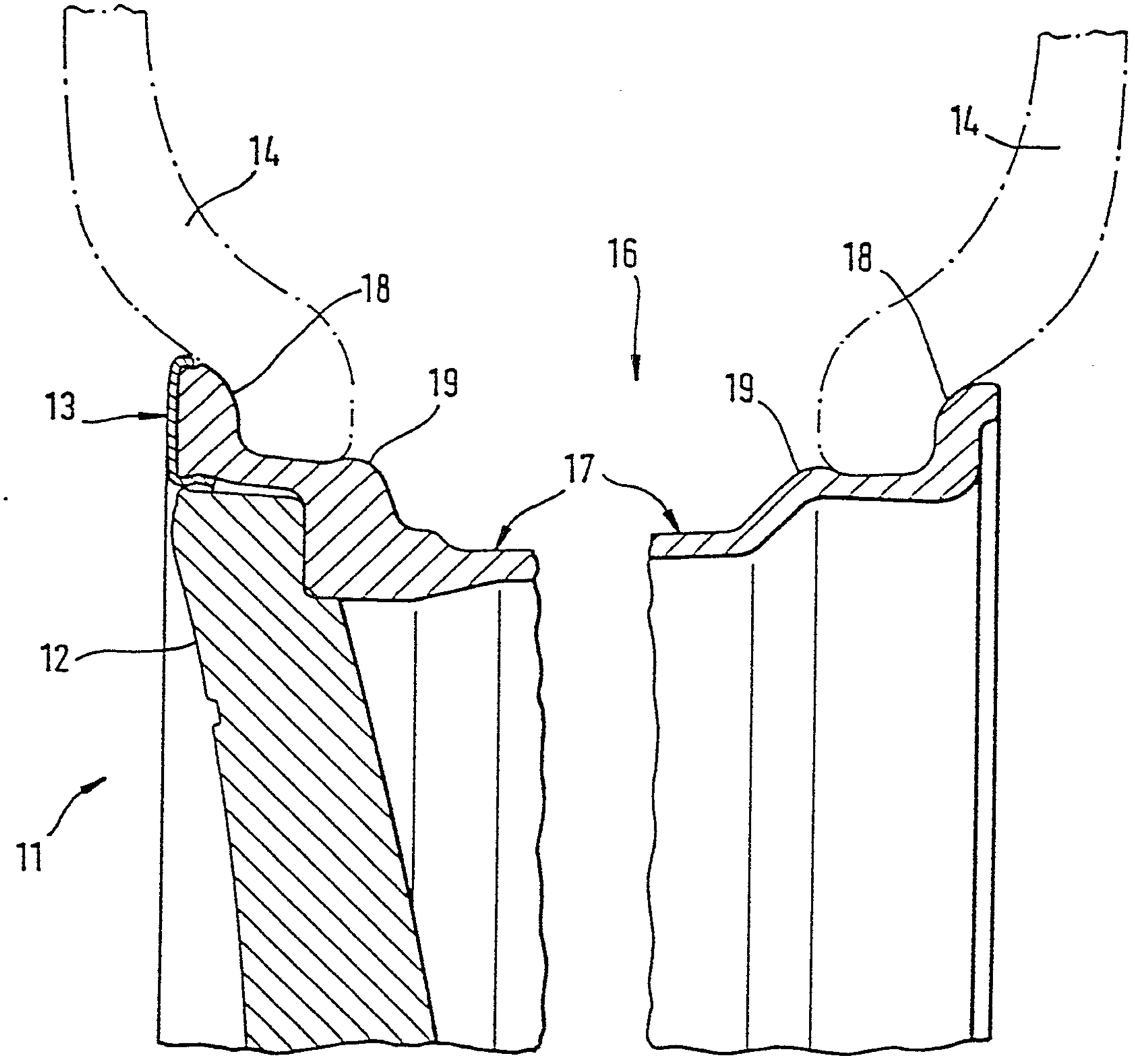

MOFFAT & CO.

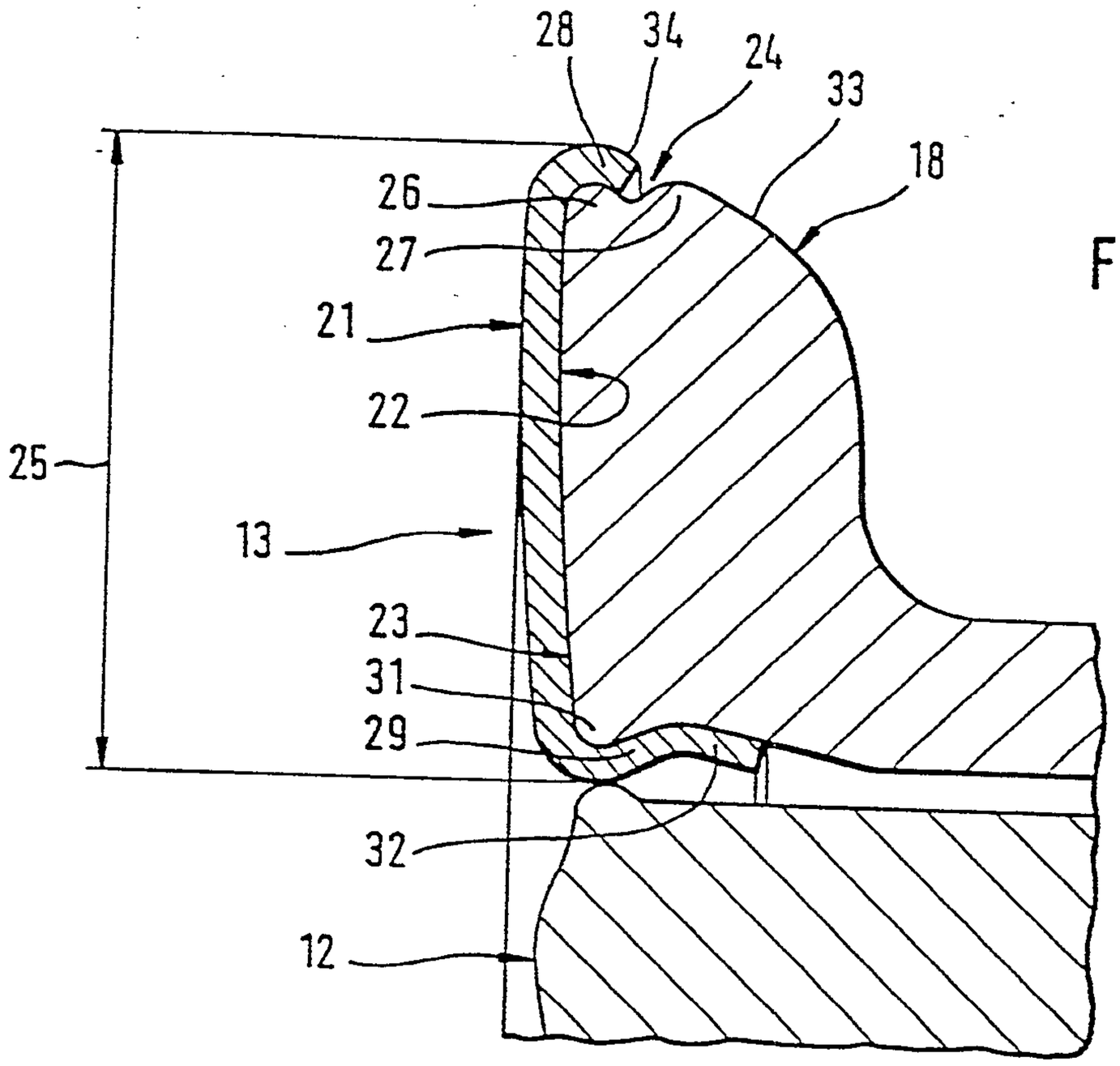

Fig. 3

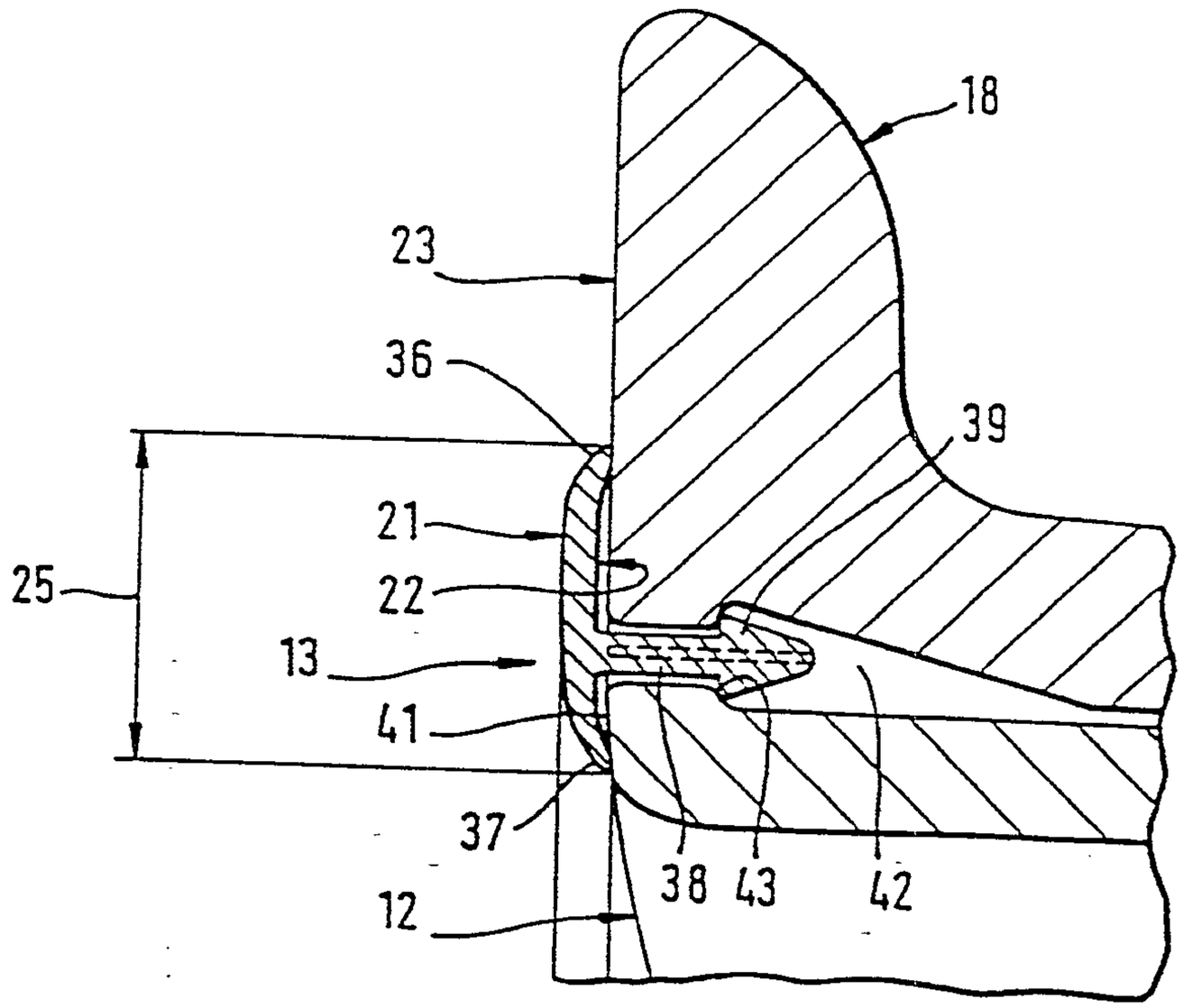

Fig. 4

MOFFAT & CO.

Fig. 5

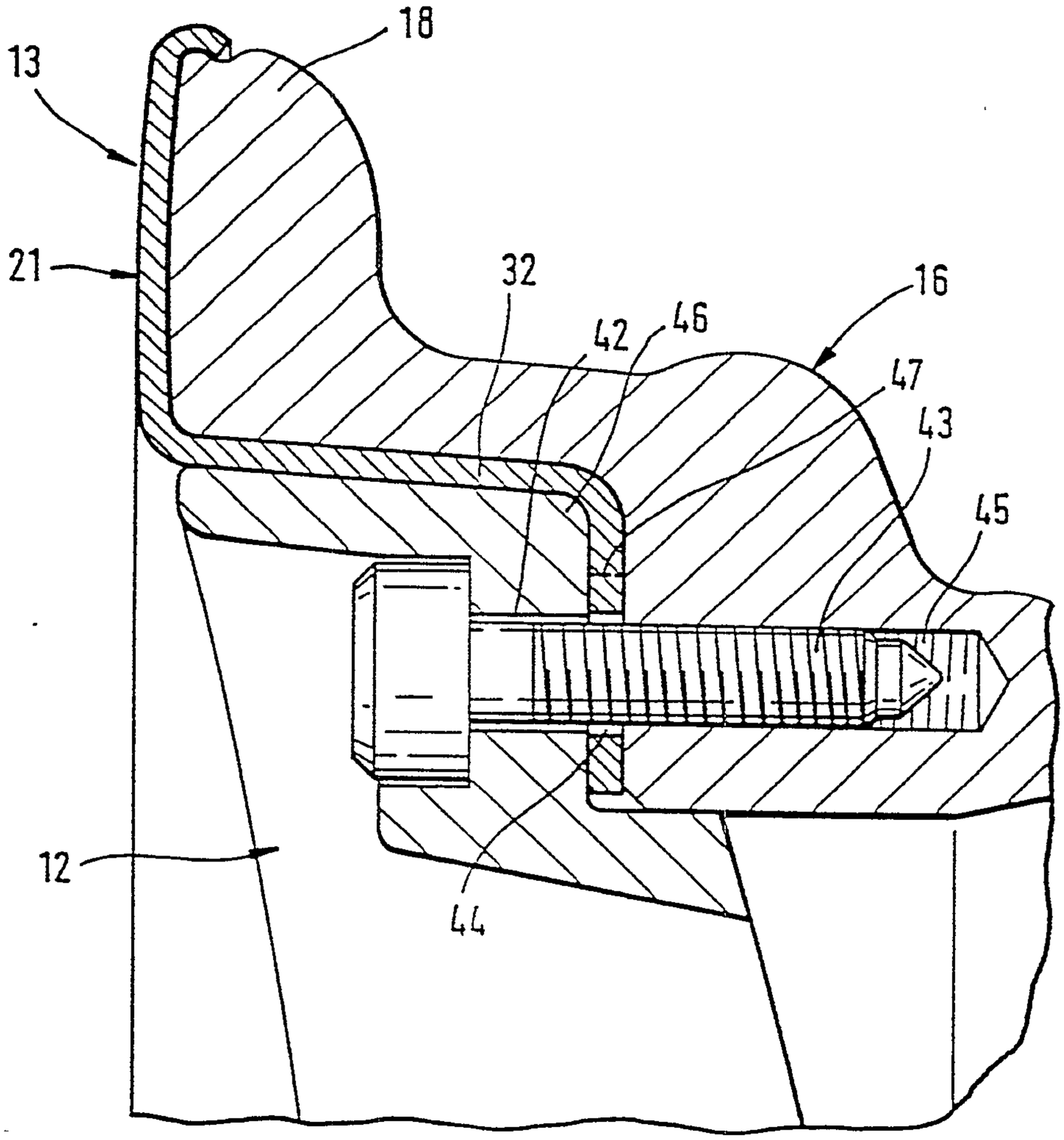

MOFFAT & CO.