Sept. 29, 1931. F. ASPDEN 1,825,039

WATER SUPPLY MEANS FOR CONCRETE MIXERS

Filed Oct. 21, 1927 2 Sheets-Sheet 1

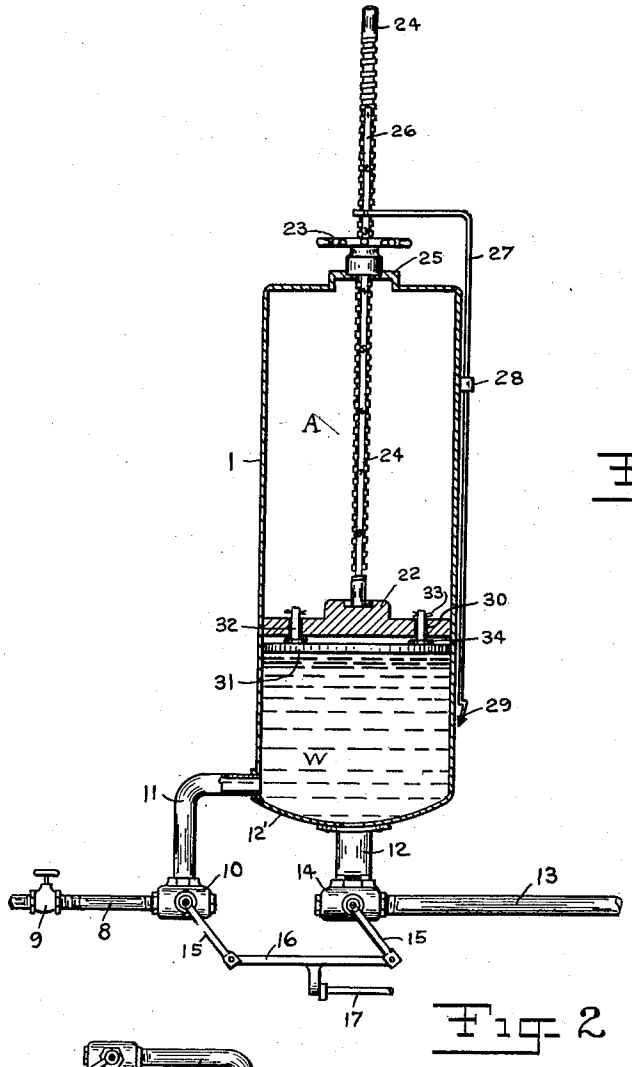

Fig. 1

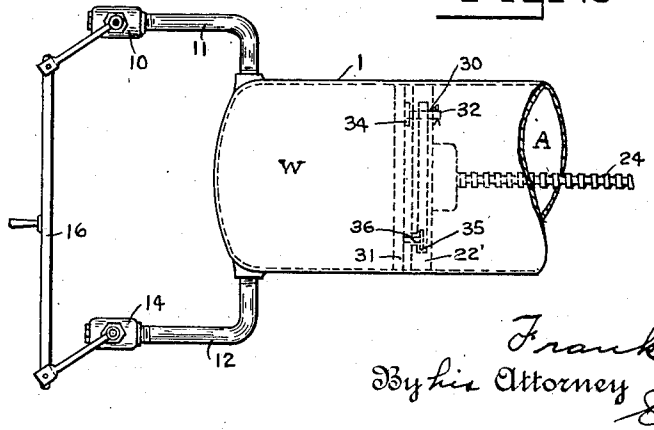

Fig. 2

Inventor
Frank Aspden
By his Attorney
E. J. Cox.

Sept. 29, 1931. F. ASPDEN 1,825,039

WATER SUPPLY MEANS FOR CONCRETE MIXERS

Filed Oct. 21, 1927 2 Sheets-Sheet 2

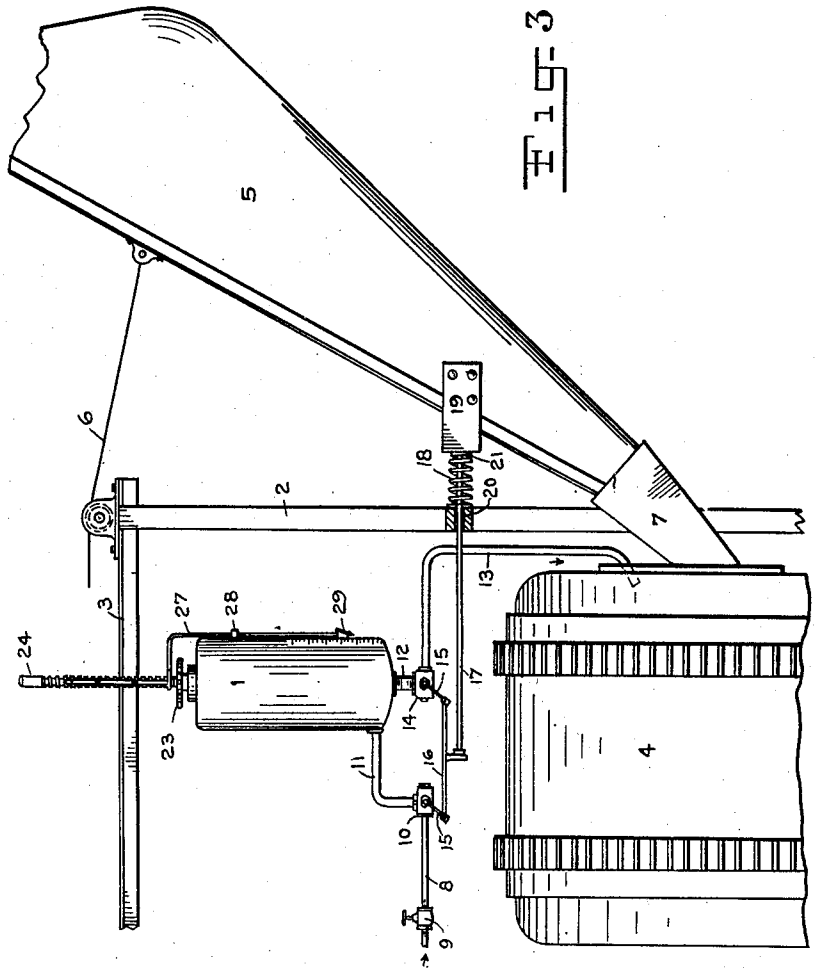

FIG. 3

Inventor
Frank Aspden
By his Attorney
S. J. Cox

Patented Sept. 29, 1931 1,825,039

UNITED STATES PATENT OFFICE

FRANK ASPDEN, OF VANCOUVER, BRITISH COLUMBIA, CANADA, ASSIGNOR TO RANSOME CONCRETE MACHINERY COMPANY, OF DUNELLEN, NEW JERSEY, A CORPORATION OF NEW JERSEY

WATER SUPPLY MEANS FOR CONCRETE MIXERS

Application filed October 21, 1927. Serial No. 227,651.

This invention has to do with concrete mixing machines and more particularly relates to the means for supplying such machines with water.

It is essential in devices of this character that the dry aggregates fed into the mixer, be met with a definite amount of water for each given batch. Should the percentage of water vary materially from the fixed standard, the resulting mixture may be unfit for use in the field due to incomplete or over hydration thereof, and the problem of measuring a definite quantity of water and feeding same to the mixer many times per hour and under varying conditions is a vexing one. Solutions thereof have been presented but with indifferent success.

The improvements herein presented relate to a novel means for solving the aforementioned difficulty, operating in conjunction with the usual skip and mixer, for producing on each operation thereof, a concrete mass carrying exactly the proper percentage of water, and involves the provision of a reliable mechanism for measuring and admitting a definite quantity of water to the mixer which will function accurately in all positions of the apparatus and under all conditions of use.

The improvements are illustrated in the accompanying drawings in which—

Fig. 1 is a vertical section of the water tank, showing inlet and outlet connections;

Fig. 2 a partial showing of a modified form of tank adapted for use in horizontal position; and

Fig. 3 a general view in side elevation of a section of the concrete mixing machine.

Referring to Figure 3, I have shown my novel tank 1 supported in any suitable manner on the frame 2, 3, transported by a truck (not shown), on which is also mounted the rotatable mixer 4 and elevating skip or bucket 5. As well understood in the art, bucket 5 is adapted for raising and lowering through suitable power means (not shown) by cable 6, said bucket 5 being shown at the highest point of its travel, viz., in position for discharging its load of dry aggregates in hopper 7 leading to mixer 4. Water supply inlet 8, having the usual cut off valve 9 communicates with tank 1 through valve 10 and elbow 11, while the outlet 12 from the tank, connected at the center of its dished bottom 12′, discharges into the mixer through conduit 13. A suitable valve 14 connects ducts 12 and 13 forming a continuous discharge line from tank 1 to mixer 4. Valve arms 15 are connected to lever 16 for simultaneous operation by actuating rod 17, with which it is connected, said rod 17 oscillating in response to pressure imparted thereto by spring 18 and dog 19. To afford longitudinal movement only, rod 17 is loosely mounted in spaced bearings, one only being shown, mounted in any convenient manner on the frame as at 20. Surrounding rod 17, is extension spring 18, one end contacting with member 21 on the rod and the other with bearing 20 on the frame which forms a stop therefor. Thus in the charging position of tank 1 and skip 5, said spring maintains rod 17 and valve arms 15 swung to the right as seen in Figure 1.

While the valve actuating structure is shown diagrammatically, it is to be understood that when same is in the position depicted in Figure 1, valve 10 is open and valve 14 closed. As well known in the art, said valves are so arranged that upon movement from the position in Figure 1 to that in Figure 3, valve 10 will completely close before valve 14 opens. For movement in the opposite direction, valve 14 closes before valve 10 opens.

Referring now to the measuring tank 1, I have provided same with a movable disc or partition 22, spanning its bore, and closely fitting the walls of the tank in watertight relationship. The tank 1 is thus divided into a water compartment W and an air compartment A, the capacity of which may be varied by turning worm wheel 23 threaded on worm 24 which is fixedly secured at its inner end to partition 22 and extends upwardly through the tank top. The worm 24 is suitably keyed in tank top 25 to prevent rotation thereof while wheel 23 is rotatably secured to said top in any convenient manner to prevent longitudinal movement thereof. Worm 24, suitably calibrated to indicate gallons and fractional parts thereof, is provided with a

machined recess or groove 26 on which appropriate numerals are stamped. For reading the tank capacity from a lower level, an indicator 27 is keyed in recess 26, responsive to vertical movements of worm 24, and being placed in a bracket 28 to prevent rotation, terminates in a pointer 29 lying adjacent suitable calibrations on the side of the tank (see Figure 3).

The partition 22 is pierced with a plurality of ducts or air vents 30 establishing communication between compartments W and A. I provide, however, in compartment W, a float 31, closely adjacent partition 22, and normally spaced and suspended therefrom by a plurality of suports 32 passing through ducts 30. Suitable means such as cotter pins 33 complete the support for the float. In order that air and water may reach the ducts 30 and at the same time afford freedom of movement for the float, I construct my float, which is preferably circular for the chosen tank, in such a manner that there is a slight clearance between it and the tank wall. Suitable packing means 34 for sealing ducts 30 are provided on the surface of float 31 next adjacent partition 22. Said packing is shown as surrounding supports 32, but in place thereof, I may face the entire inner surface of float 31 with packing material.

In operation, the operator rotates worm wheel 23, until the indicating means registers the desired volume, the worm 24, partition 22 and float 31 moving longitudinally of the tank 1 to a position whereby the compartment W corresponds in capacity with the calibration. Valve 10 being open and valve 14 closed, as shown in Figure 1, stop cock 9 is opened and water under pressure admitted to the tank. As the water rises in the tank, the air escapes around float 31, through ducts 30 into compartment A from whence it vents to the atmosphere through the threads in worm 24, and aperture therefor in tank top 25. When the water level reaches float 31, the latter is buoyed up, forcing packing 34 against the ends of ducts 30 to seal same, thereby preventing escape of the rising water. Although the partition 22 is provided with water tight packing between its periphery and the tank wall, as aforementioned, a slight clearance is provided between the tank wall and the periphery of float 31. An infinitesimal amount of water passes through said clearance, reaching the contiguous surfaces of float 31 and partition 22, and wets said surfaces and packing 34, thereby effecting a water seal for the ends of ducts 30 supplementing the sealing action of the packing. As no more water can be held in the compartment W, the machine is in condition for operation.

As is well known to those skilled in the art, the bucket 5 is normally in lowered position to receive the charge at dry aggregates. Tank 1 having been charged, as explained above, with the correct quantity of water for the chosen batch. bucket 5 is elevated by cable 6 to discharging position (as seen in Figure 3). As said bucket approaches the end of its travel, dog 19, connected thereto, contacts with member 21 to urge rod 17 to the left against the action of spring 18. Valve arms 15 are, in consequence, urged to the left, valve 10 first closing to cut off inlet 8 and valve 14 afterwards opening outlet 12 to discharge the contents of compartment W, through conduit 13, into mixer 4 where the charge from bucket 5 has been deposited during the same operation. It will be noted here that while the filling operation of the tank is accomplished by water under pressure, no force whatsoever is called upon to discharge the contents thereof; the water issuing from the tank into the mixer solely by gravity flows from the former to the latter. As the water recedes from the tank, the float falls away from ducts 30 and suspends on cotter pins 33. The vents or ducts 30 are thus automatically unsealed, ready to function in the next operation. Upon completion of the foregoing operation, the bucket 5 is lowered to receive a new charge and the spring 18, being released, automatically functions to return valves 10 and 14 to the position shown in Figure 1; at this time the valve 14 closing and valve 10 opening thereafter to admit a fresh charge of water to the tank. This cycle is periodically repeated without any further attention to valve 9. Since the float 31 may be moved to shut off ducts 30 either in response to water level or as a result of the pressure of the water, it is apparent that my improved structure admits of accurate functioning regardless of the angle at which it may rest. For example, should the wheels of the truck be on uneven ground, or on a grade, the float will operate to close and open the ducts, thus assuring that the tank will hold the same volume at which it has been set, without further adjustment or concern about its axis. This feature is extremely important in apparatus of this character because of the variety of topography confronted in use in the field.

My modified structure presented in Figure 2 is adapted for use where a vertically disposed tank is undesirable. I have therefore shown the tank 1 in horizontal position with the same parts heretofore referred to. In place of a plurality of air vents or ducts in the partition, I have shown the movable partition 22′ with but one vent 30 disposed in that portion adjacent the upper side of the tank. The float 31′ carries the support 32 and cotter pin, as in the preferred embodiment, as well as the packing 34. The partition 22′ is further provided with an annular T-shaped recess 35 in which are disposed the heads of a plurality of T-shaped guides 36, the longer leg of same being secured to float 31′ for

guiding and steadying same. Any number of such guides may be provided, although I prefer to use four mounted equi-distantly from each other and from the vent 30. The remaining structure not shown, is understood to be the same as that shown in Figure 1. In this embodiment, the water entering compartment W through 11, operates by pressure and through its buoyant effect, to actuate the float 31′, the air escaping of course through the single duct 30. Said duct is sealed in the same manner as heretofore expressed.

It will be apparent to those skilled in the art, that my improvements afford a mechanism having few mechanical parts, for accurately measuring the water charge in any position of the apparatus. At the same time I have provided a gravity feed means from tank 1 to mixer 4 which, though simple, is devoid of expulsion means relying on power.

In its entirety, I have co-ordinated the elements disclosed, into a mechanism which produces a reliable and dependable product in the field.

I claim:

In a concrete mixing machine having a mixer and a loading device for charging said mixer with non-aqueous material, a water supply device comprising a tank, an adjustable partition therein for varying and determining the effective capacity of said tank, apertures adapted to act as air vents in said partition, a float member secured to said partition and positioned in close proximity thereto, supporting pins projecting from said float member and engaging said apertures, means for securing said pins to said partition, closure means around said projecting pins and adapted to close said apertures as and when the usable portion of said tank is filled to capacity, controllable means adapted to alternately fill and completely discharge water into and from said tank respectively.

Witness my hand this 4th day of October, 1927, at Vancouver, British Columbia.

FRANK ASPDEN.