Dec. 4, 1928. 1,693,717

C. F. LIENESCH

FILTERING MECHANISM

Filed Oct. 6, 1926

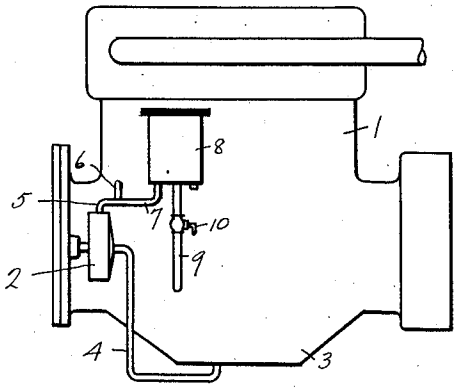

Fig. 1

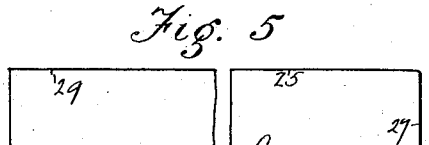

Fig. 5

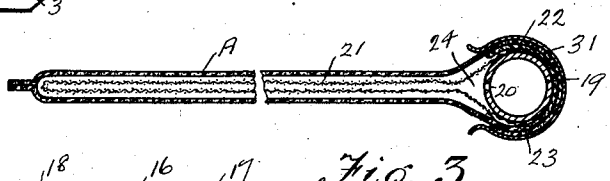

Fig. 3

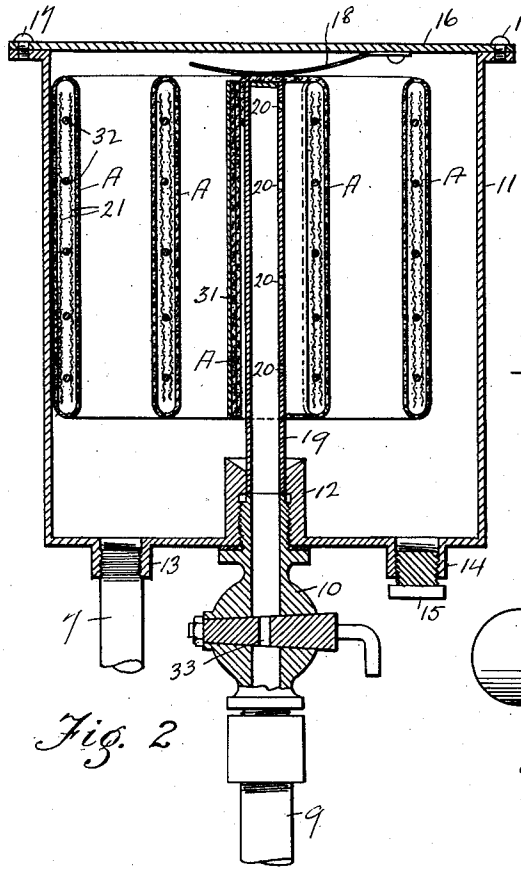

Fig. 2

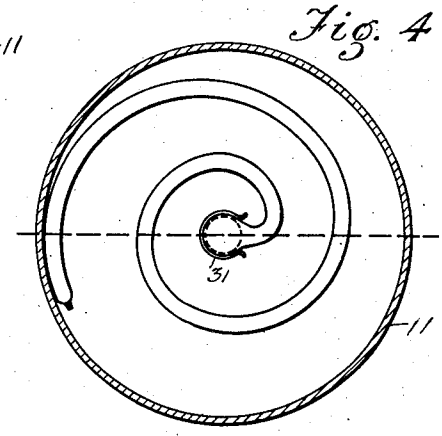

Fig. 4

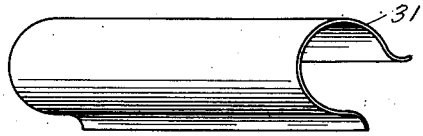

Fig. 6

INVENTOR.

C. F. Lienesch

BY

Charles L. Stokes

his ATTORNEY.

Patented Dec. 4, 1928. 1,693,717

UNITED STATES PATENT OFFICE.

CHARLES F. LIENESCH, OF MONROVIA, CALIFORNIA, ASSIGNOR TO CHARLES L. STOKES, OF LOS ANGELES, CALIFORNIA.

FILTERING MECHANISM.

Application filed October 6, 1926. Serial No. 139,887.

My invention relates to improvements in filtering mechanisms for purifying liquids.

The principal object of my invention is to provide a simple and efficient filter for clarifying the lubricating oil in an internal combustion engine while the same is operating.

Referring to the drawings in which the same numbers indicate like parts:—Fig. 1 is a view of an internal combustion engine showing the general arrangement of the filter thereto, Fig. 2 is a vertical section of the filter itself, Fig. 3 is a longitudinal section of the filtering means, Fig. 4 is a view looking down inside Fig. 2 from the top, Fig. 5 illustrates the method of cutting a portion and assembling, Fig. 6 is an isometric view of one of the parts.

An internal combustion engine 1 is provided with an oil pump 2, suitably driven from the engine crank shaft which serves to draw lubricating oil from a sump 3, through a pipe 4. The lubricating oil is then forced by pump 2 through a pipe 5 to the interior of the engine crank case, or bearings, by way of a pipe 6. A by-pass pipe 7 serves to take a portion of the lubricating oil supplied by pump 2 to a filter 8, suitably fastened on engine 1. The lubricating oil supplied by pump 2 to filter 8 and to the engine through pipe 6 may be under considerable pressure as is well known in the art, or the same, in case of an engine having splash lubrication, may just be under light pressure.

The lubricating oil, after having been filtered and freed of its impurities, flows through a pipe 9, controlled by valve 10, to the interior of the engine crank case, preferably above the level of the lubricating oil in sump 3.

Filter 8 is made of a cylindrical casing 11, having a central boss 12, a boss 13 for the reception of pipe 7 and a boss 14 for containing a drain plug 15. A cover 16 encloses the upper end of casing 11, being suitably gasketed and held by screws 17 to form an air and liquid tight joint, or fluid tight joint. A curved spring 18 is suitably riveted to the inside of cover 16, or other resilient material may be used, for a purpose to be later described.

The actual filtering means within casing 11 and the method of assembling the same is as follows:

A central pipe 19 is adapted to snugly fit in the upper end of boss 12 after valve 10 is inserted therein and is adapted to abut on the inner end of valve 10. Pipe 19 is open at its lower end and closed at its upper end and has a plurality of orifices 20 formed in the wall thereof. A rectangular strip of metal wire screen 21 is then cut the desired length and folded in half, having one end soldered or fastened at 22 to pipe 19, the other side being secured in a similar way to pipe 19 at 23. The ends of screen 21 when joined to pipe 19 will converge at a point beyond pipe 19 to leave a space 24 opposite the row of orifices 20. A rectangular piece of cloth A such as felt, etc., suitable for filtering, is then cut and folded longitudinally so that side 25 coincides with side 26, edge 27 coinciding with edge 28. Edge 27 is then stitched to edge 28 and side 25 to side 26 up to the points 29 thus forming a sack adapted to be slipped over the screen 21, the point 30 then coming on the upper end of pipe 19. The loose ends of the cloth A from the points 29 are then lapped and folded tightly around pipe 19, the stitching at the points 29 being reinforced to withstand the strain of tightening the cloth A around the pipe 19, and when the cloth is thus folded tightly around pipe 19, a spring metal clip 31, is slipped over the cloth and securely binds the same in place on screen 21 and pipe 19.

The whole assembly is then rolled in spiral form to be of less diameter than the interior of casing 11, the end of pipe 19 is slipped into boss 12 and the spiral roll released, the assembly being securely held in place by the tension of spring 18 when cover 16 is put in place. While it is not necessary, a series of pieces of wire 32 may be laid between the folds of metal screen 21 for forming larger passageways for the filtered oil.

When the assembly is then in place in casing 11 as described, the resiliency of metal screen 21 forces the assembly in spiral form, as shown in Fig. 4, out against the interior wall of casing 11 and in fairly firm relation thereto so that, together with the close fit in boss 12 and the pressure of spring 18, the entire mechanism remains as assembled. It is, of course, obvious that the spiral may be of smaller diameter than casing 11 by compression with a cord, but I prefer to permit screen 21 to exert its spring effect, as stated.

Upon oil being supplied through pipe 7 to the interior of casing 11, it will be seen that the same will substantially fill casing 11 and

is forced through the filter cloth A and travels through the interstices of screen 21 to the space 24, whence it is forced through orifice 20 to pipe 19 and thence through a regulating orifice 33 set in valve 10 and thereafter travels through pipe 9 back to the interior of the engine crank case.

The construction shown and the operation described, causes the collection on the outside of cloth A of all the impurities such as dirt, etc., in suspension in the lubricating oil, the heavier particles such as metal chips together with any water in the oil being deposited on the bottom of casing 11 whence they may be withdrawn through plug 15. The finer portions of the impurities will, of course, be collecter on the cloth A while the purified lubricating oil travels through the interstices of screen 21 for reuse in the engine.

It will be noted that space 24 is especially desirable so that there will be no clogging of orifices 20 by the folds of the metal screen and cloth and in this manner I give an extended filtering area in a confined space which will have a very long life before cloth A will have to be changed, or renewed. Also the regulating orifice 33 is desirable when the filter is used under heavy pressure to regulate the amount of filtering and also prevent starving the main lubricating system of oil.

By the above construction and operation, I am enabled to provide a simple filter of low initial cost and high efficiency, which has a very extended life and gives a large filtering surface in a confined space.

I claim:—

1. A filtering mechanism, comprising a casing having an inlet and an outlet port, a pipe in said outlet port extending upward in said casing and provided with a plurality of openings in one side only thereof, a flexible reticulated guard member bent to form a loop and having its ends secured to said pipe at each side of said openings, filter material in the form of a bag for enclosing said guard member, and a spring clip for securing the ends of said material to said pipe.

2. A filtering mechanism comprising a casing having an inlet and an outlet port, a pipe secured in said outlet port and extending upward in said casing and having a plurality of openings on one side only thereof, a rectangular screen doubled on itself to form a loop with its sides spaced apart, the ends of said loop being connected to said pipe at each side of said openings whereby a space is formed by said tube and the sides of said screen in front of said openings, a filter member in the form of a bag for containing said screen, and means for securing the ends of said first named means to said pipe.

3. A filtering device comprising a container having an inlet and an outlet port, a pipe in said outlet port and extending upward in said container and having apertures in one side only, a screen in the form of a loop of greater length than the longest distance between said pipe and the wall of said container, the ends of said loop being secured to said pipe at each side of said openings whereby said openings are in communication with the space within said loop, a filter member in the form of a bag for enclosing said screen, and means for securing the free ends of said member to the side of said pipe opposite said openings, said screen and member being spirally wound and resiliently held against the inner surface of said wall, and means for resiliently engaging the top edge of said filter member.

4. A filtering mechanism comprising a casing having an inlet and an outlet port, a pipe secured in said outlet port and extending upward in said casing and having a plurality of openings on one side only thereof, a rectangular screen doubled on itself to form a loop with its sides spaced apart, the ends of said loop being connected to said pipe at each side of said openings whereby a space is formed by said tube and the sides of said screen in front of said openings, a filter member in the form of a bag for containing said screen, the ends of said member overlapping at the back of said tube, and means for holding said ends in overlapping relation.

5. A filtering mechanism comprising a casing having an inlet and an outlet port, a pipe in said outlet port extending upward in said casing and provided with a plurality of openings in one side only thereof, a flexible reticulated guard member bent to form a loop and having its ends secured to said pipe at each side of said openings, filter material in the form of a bag for enclosing said guard member, spacer members for holding the walls of said guard member in spaced relation, and means for securing the ends of said bag to said pipe.

Signed at Los Angeles, in the county of Los Angeles and State of California, this first day of October, A. D. 1926.

CHARLES F. LIENESCH.