No. 783,814. PATENTED FEB. 28, 1905.

C. M. BENSON.

WRENCH.

APPLICATION FILED DEC. 4, 1903.

2 SHEETS—SHEET 1.

Fig. 1.

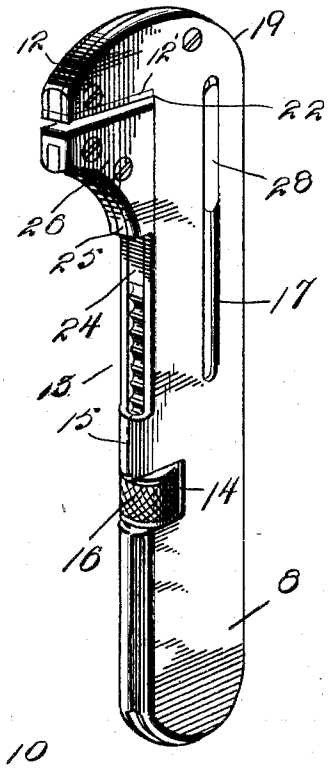

Fig. 2.

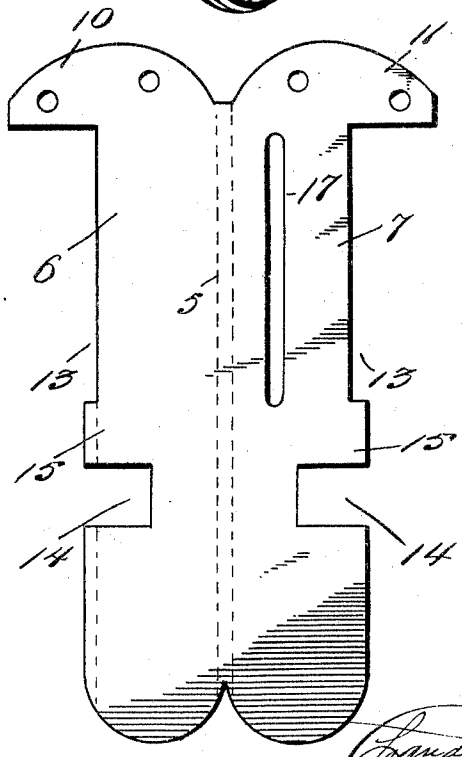

Witnesses
Am Simpson
F. C. Jones

Inventor
C. M. Benson
By
Attorneys

No. 783,814. PATENTED FEB. 28, 1905.

C. M. BENSON.

WRENCH.

APPLICATION FILED DEC. 4, 1903.

2 SHEETS—SHEET 2.

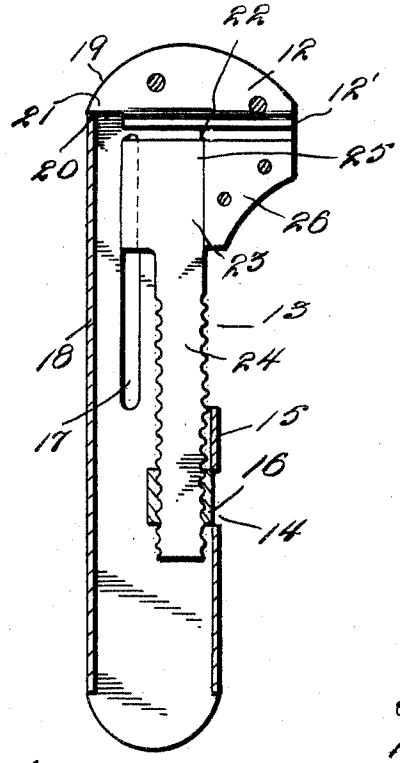

Fig. 3.

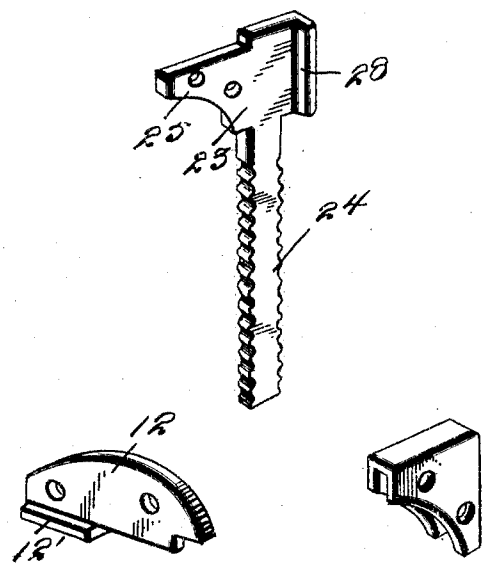



Fig. 4.

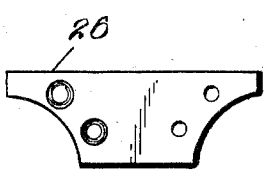

Fig. 5.

Witnesses
A. M. Simpson
F. C. Jones

Inventor
C. M. Benson
Chandlee & Chandlee By
Attorneys

No. 783,814. Patented February 28, 1905.

UNITED STATES PATENT OFFICE.

CHARLES MARTIN BENSON, OF PROVIDENCE, RHODE ISLAND.

WRENCH.

SPECIFICATION forming part of Letters Patent No. 783,814, dated February 28, 1905.

Application filed December 4, 1903. Serial No. 183,757.

To all whom it may concern:

Be it known that I, CHARLES MARTIN BENSON, a citizen of the United States, residing at Providence, in the county of Providence, State of Rhode Island, have invented certain new and useful Improvements in Wrenches; and I do hereby declare the following to be a full, clear, and exact description of the invention, such as will enable others skilled in the art to which it appertains to make and use the same.

This invention relates to wrenches, and more particularly to that class known as "monkey-wrenches," and has for its object to provide a wrench of this kind which will be simple of construction and cheap of manufacture and in which the handle, while being formed from a single blank, will be so constructed as to embody a maximum amount of strength with a minimum of weight and thickness of material.

A further object is to provide a construction in which the grasping-faces of both the stationary and movable jaws may be given the desired hardness without hardening the entire wrench, and in which these grasping-faces of the jaws may be attached to the wrench in a simple and efficient way.

In the drawings forming a portion of this specification, and in which like numerals of reference indicate similar parts in the several views, Figure 1 is a perspective view of the complete wrench. Fig. 2 is a plan view of the blank from which the handle is formed. Fig. 3 is a longitudinal section of Fig. 1, taken in the plane of the movable member. Fig. 4 is a view showing in perspective the several parts of the wrench. Fig. 5 is a plan view of the blank from which the jaw-face is formed.

Referring now to the drawings, there is shown in Fig. 2 a blank from which the handle of the present wrench may be formed. This blank is substantially rectangular in shape and is adapted to be bent along the dotted line 5 to form the spaced sides 6 and 7 of the handle 8. At one end the blank has laterally-projecting portions 10 and 11, which when the blank is folded form the sides of the stationary jaw of the wrench, between which is disposed the hardened filling-piece and jaw-face 12, which will be hereinafter described. In both edges of the blank, extending from the portions 10 and 11, are shallow recesses 13, which continue through substantially half the length of the blank, and below these recesses are a pair of rectangular recesses 14, which are separated from the recesses 13 by the shoulder 15. When the blank is folded, the recesses 14 form an opening through the handle of the wrench, communicating with one edge thereof, which receives the thumb-nut 16, as shown. Between one of the recesses 13 and the line along which the blank is folded there is formed through the blank a slot 17, which acts as a guide for the movable jaw, as will be presently explained.

The filling-piece 12 mentioned above consists of a metallic plate having a T-flange 12′ along a portion of one of its edges, which lies against and protects the edges of the portions 10 and 11. This filling-piece is secured between the portions 10 and 11 by means of screws or rivets, as shown. When folded, the blank forms the sides 6 and 7 of the handle 8, as mentioned, and these sides are connected along the back by the portion 18, which may be termed a "web." This web ends slightly below the top of the wrench where the stationary jaw is rounded, as shown at 19, and there is thus formed a shoulder 20, against which the lower rearward corner 21 of the filling-piece bears, as shown in Fig. 3. There is thus formed a support for the stationary jaw, which prevents splitting of the sides of the wrench at the points 22, which would otherwise occur, it being apparent that upward strain upon the ends of the stationary jaw would tend to split the sides of the points mentioned and that such strain is taken up by the shoulder 20.

In connection with the parts just described there is employed a sliding jaw 23, which has a stem 24 depending therefrom and threaded to receive a thumb-nut 16. As mentioned above, this thumb-nut is disposed in the recesses 14 so that if it be turned upon the stem the jaw 23 will move toward or away from the stationary jaw, as the case may be. As shown, the portion 25 of the jaw 23 projects from between the sides 6 and 7 of the wrench and is protected by a hardened jaw-face 26, having

a recess or slot 27 therein, which receives the portion 25, to which it is riveted, as shown. This jaw-face 26 may be formed from the blank shown in Fig. 5 and may be bent into correct shape. The jaw-face when in place lies with its rearward edges in the recesses 13, as shown, and acts as a stop against the shoulders to limit the downward motion of the jaw. To prevent other than vertical movement of the jaw 23, the jaw carries an elongated lug 28, which lies within the slot 17.

I am aware of the fact that wrenches formed from a single blank are old; but such wrenches have therefore proven too weak for general use. In the present invention I have not only provided a construction in which the wrench is prevented from splitting, as mentioned above, but I have also provided a construction in which the jaw-faces may be given the correct degree of hardness independently of the rest of the wrench and in which these faces when worn out may be quickly and easily replaced.

In practice any desired changes in the specific construction described above may be made and any suitable materials may be used without departing from the spirit of the invention.

What is claimed is—

1. In a device of the class described, the combination with a handle formed from a blank bent to form spaced sides and a continuous connecting-web extending from end to end of the rearward edges of the sides, one of said sides having a longitudinal slot therein, of a jaw secured between the sides at one end and extending laterally therebeyond and having its jaw-face directed toward the opposite end of the handle, a movable member comprising a threaded stem having a jaw projecting laterally at one end at one of its sides and having a lug at its opposite side extending at right angles to the jaw, said member being disposed between the sides of the handle with its lug in engagement with the slot and with its jaw extending from between the forward edges of the side pieces inwardly of the first-named jaw, and in position for coöperation therewith, and means for moving the movable member longitudinally of the handle.

2. A wrench comprising a handle including spaced sides and a continuous connecting-web extending throughout the entire length of the handle, said handle having a laterally-projecting jaw at one of its ends disposed with its face directed toward the opposite end of the handle, a movable member disposed between the spaced sides and projecting beyond the forward edges thereof to form a jaw for coöperation with the lower edge of first-named jaw, and means for preventing lateral movement of the movable jaw.

3. A wrench comprising a handle including spaced sides and a continuous connecting-web extending throughout the entire length of the handle, one of said sides having a longitudinal slot therein, a jaw secured between the sides at one end thereof and projecting beyond the forward edges of the sides, said sides having their forward edges cut away, the cut-away portions extending from the jaw throughout substantially half the length of the handle, said sides also having alining recesses in their forward edges below their cut-away portions, a jaw slidably disposed between the sides and projecting beyond the forward edges thereof, said jaw having a lug slidably engaged in the slot, a threaded stem carried by the jaw, a nut engaged with the stem and lying in the recesses, said nut being arranged for operation to move the sliding jaw longitudinally of the handle, and a jaw-facing having a slot therein in which the sliding jaw is engaged, said jaw-facing lying with its inner edge portion in the cut-away portions of the sides and resting against the sides for coöperation with the lug to prevent movement of the sliding jaw other than longitudinally of the handle.

In testimony whereof I affix my signature in presence of two witnesses.

CHARLES MARTIN BENSON.

Witnesses:
ANTON G. SHUNELL,
JOHAN JOHANSEN.