March 7, 1972 E. J. HELM 3,647,636

SYSTEM FOR COLLECTING DUST AND SMOKE WHEN COKE IS PUSHED FROM A COKE OVEN

Filed Jan. 19, 1970 4 Sheets-Sheet 1

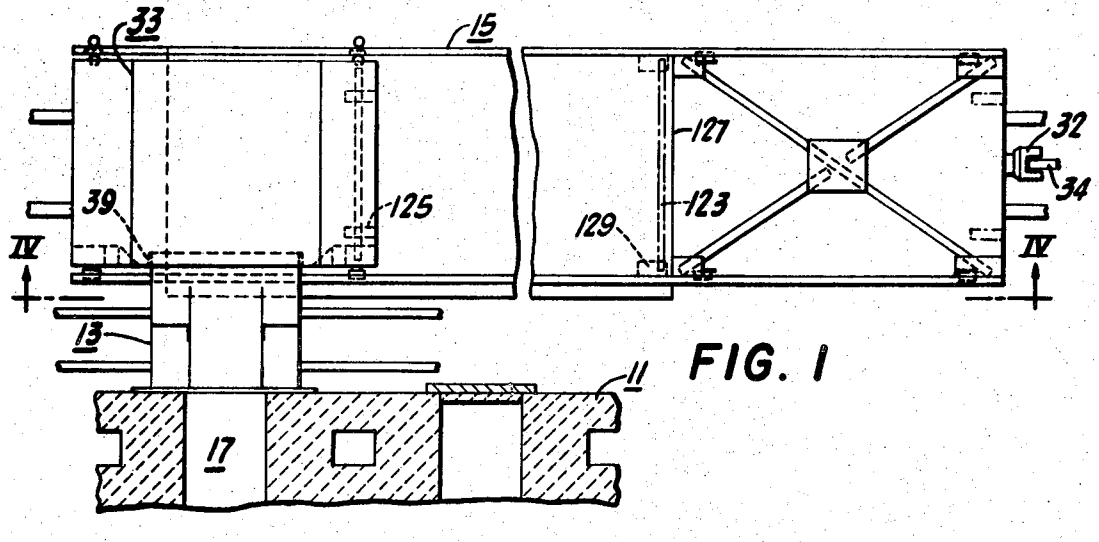

FIG. 1

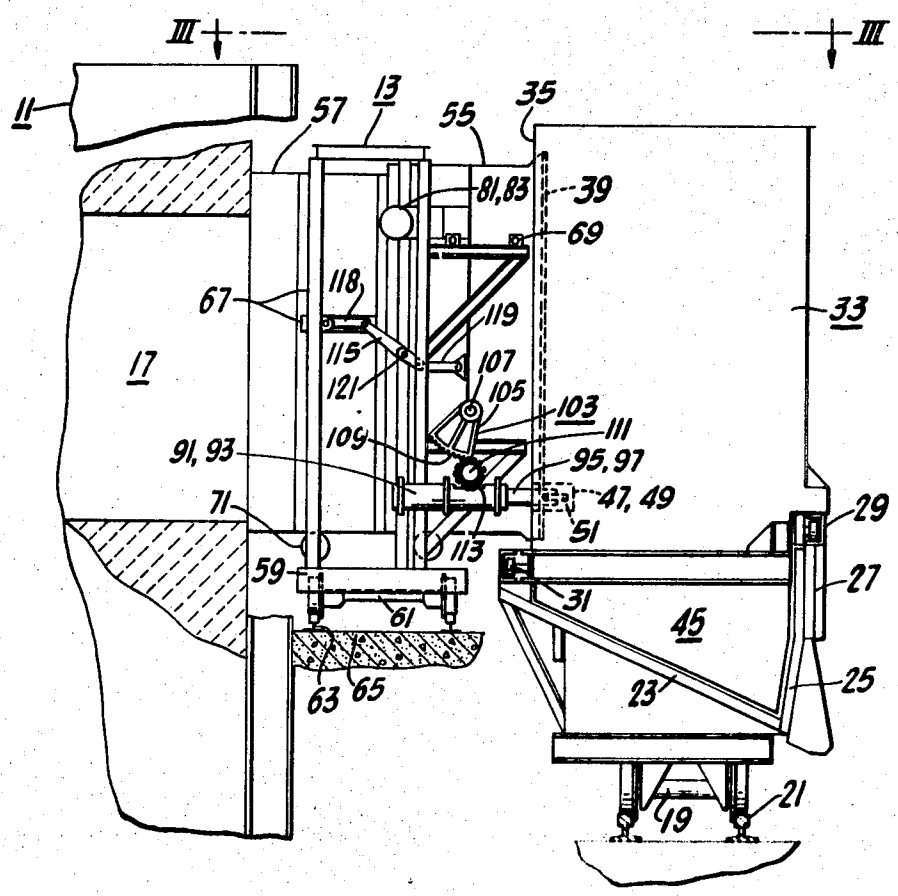

FIG. 2

INVENTOR.
EDWARD J. HELM

BY Sherman H. Barber
Attorney

March 7, 1972 E. J. HELM 3,647,636

SYSTEM FOR COLLECTING DUST AND SMOKE WHEN COKE IS PUSHED FROM A COKE OVEN

Filed Jan. 19, 1970 4 Sheets-Sheet 2

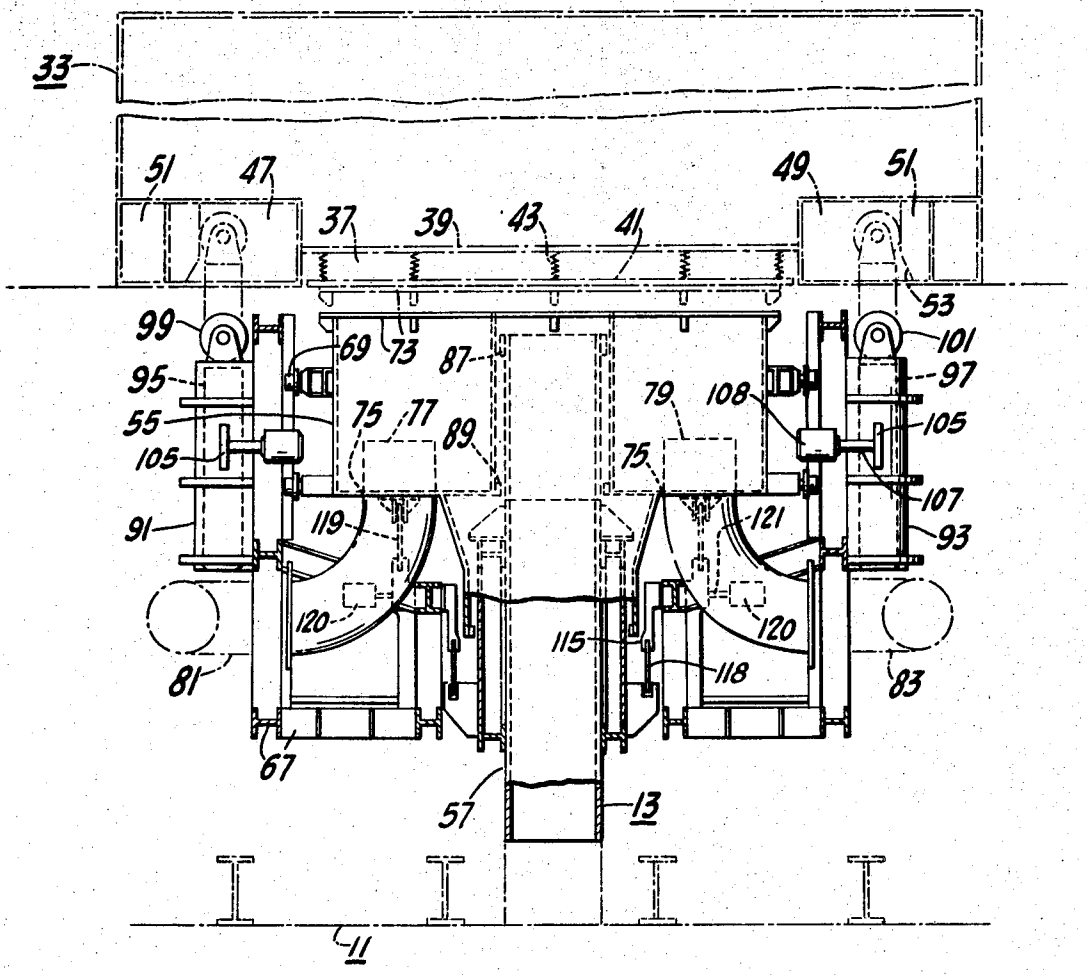

FIG. 3

INVENTOR.
EDWARD J. HELM

BY Sherman H. Barker
Attorney

March 7, 1972 E. J. HELM 3,647,636

SYSTEM FOR COLLECTING DUST AND SMOKE WHEN COKE IS PUSHED FROM A COKE OVEN

Filed Jan. 19, 1970 4 Sheets-Sheet 3

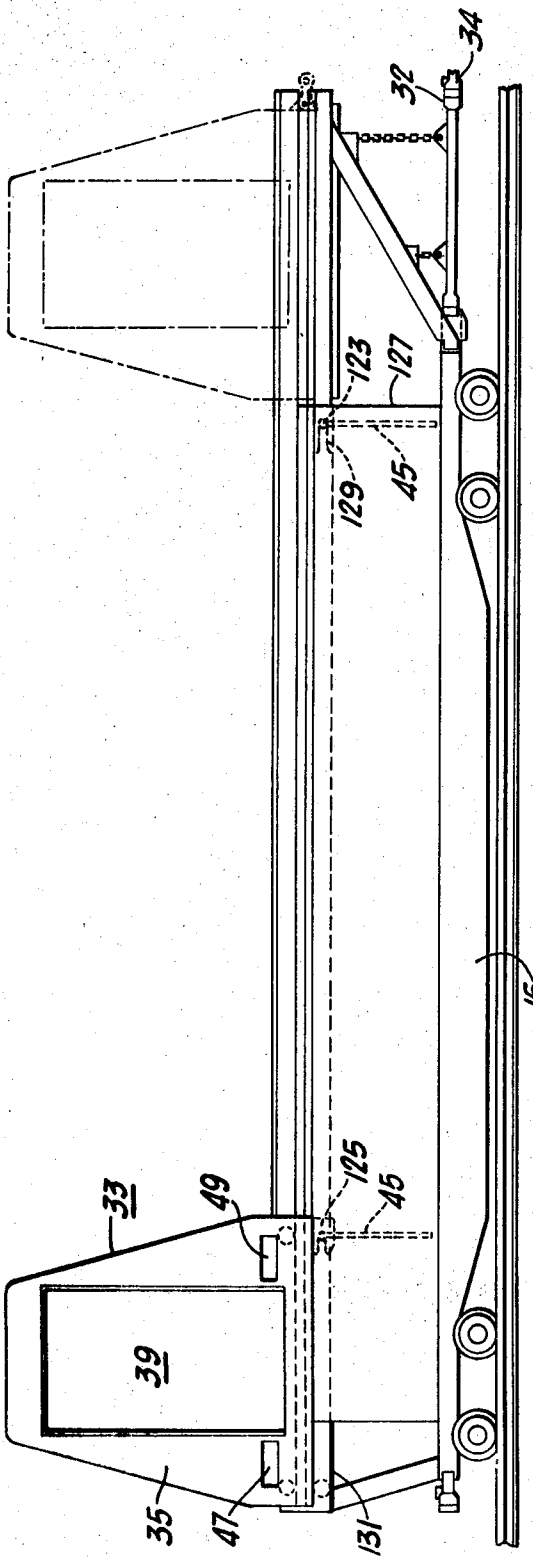

FIG. 4

INVENTOR.
EDWARD J. HELM

BY Sherman H. Barber
Attorney

March 7, 1972 E. J. HELM 3,647,636

SYSTEM FOR COLLECTING DUST AND SMOKE WHEN COKE IS PUSHED FROM A COKE OVEN

Filed Jan. 19, 1970 4 Sheets-Sheet 4

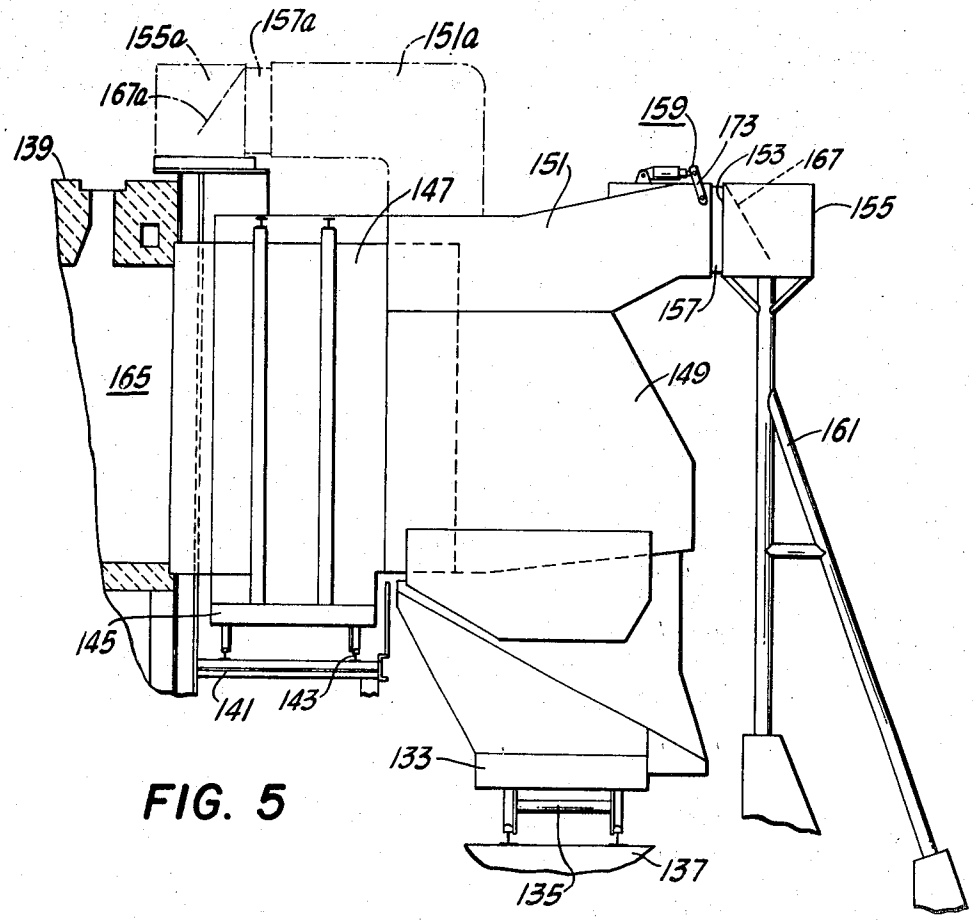

FIG. 5

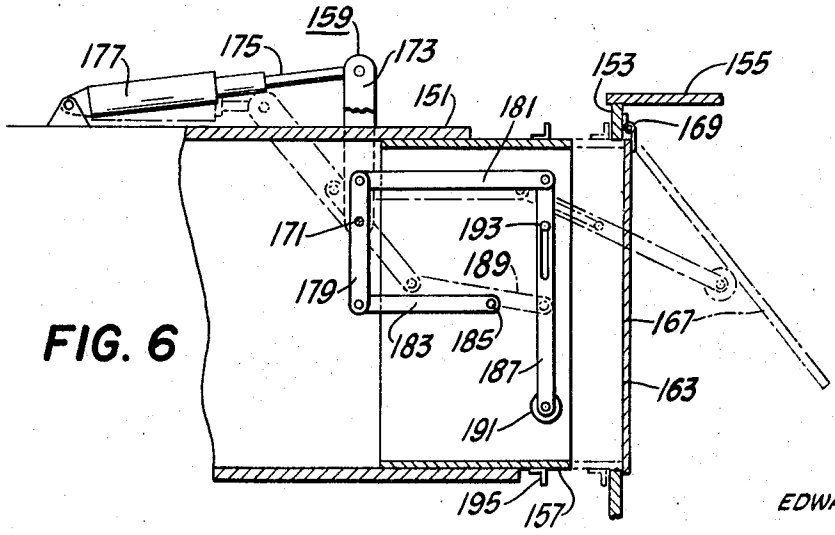

FIG. 6

INVENTOR.
EDWARD J. HELM

BY Sherman H. Barber
Attorney

United States Patent Office 3,647,636 Patented Mar. 7, 1972

3,647,636

SYSTEM FOR COLLECTING DUST AND SMOKE WHEN COKE IS PUSHED FROM A COKE OVEN

Edward J. Helm, Pittsburgh, Pa., assignor to Koppers Company, Inc.

Continuation-in-part of application Ser. No. 840,447, Oct. 13, 1969. This application Jan. 19, 1970, Ser. No. 3,769

Int. Cl. C10b *33/00*

U.S. Cl. 202—263 13 Claims

ABSTRACT OF THE DISCLOSURE

A hood is movably mounted to a coke quenching car and cooperates with a coke guide that keeps the hood in place relative to the coke guide as the coke quenching car moves relative to the hood. Dust and smoke from pushed coke passing through the hood are collected in the hood. Gas scrubbing equipment is associated with the coke guide and the hood to remove particulate matter from the gasses collected in the hood.

CROSS REFERENCE TO RELATED APPLICATION

The present application is a continuation-in-part of application Ser. No. 840,447 filed Oct. 13, 1969, and now abandoned.

BACKGROUND OF THE INVENTION

For a number of years, considerable effort has been expended to develop a practical system for collecting the smoke and dust which are liberated as the coke oven charge is pushed from a coke oven into the quenching car. As the coke cake breaks up and falls into the quenching car, substantial quantities of dust are carried into the atmosphere by hot air rising from the coke. There is usually some residual volatile matter also in the coke which flashes into the air as the coke falls into the quenching car. Whenever there are spots or areas of incompletely coked material in the charge, large quantities of smoke may be liberated as this material burns as it falls through the air. The smoke comes from incomplete combustion of the hydrocarbons liberated. The quenching car is moved slowly in front of the oven being pushed in order to catch the coke in a relatively uniform layer in the bottom of the quenching car and to present as uniform a layer of coke as possible for the quenching operation. After the coke has fallen into the quenching car there is usually very little additional smoke and dust emitted. The residual volatile matter evolved during travel to the quenching station, usually burns with a very short clear flame that produces no smoke.

Various methods have been suggested to collect the dust and smoke, including the provision of an enclosure over the entire quenching track with connections to a source of suction and to dust collecting equipment. One such system comprises a large hood that is suspended from a coke guide on the coke side oven bench with connections from the hood to a large wet gas scrubber for pulling a suction on the hood and for scrubbing out particulate matter in the gas. This hood encloses the coke guide and extends out over the full width of the quenching car, and is equivalent in length to about half the length of the quenching car. A substantial vertical clearance is provided between the ends of this hood and the quenching car in order to permit vertical clearance for the cab of the locomotive, which extends several feet above the top of the quenching car. There is also a lesser, but still substantial, vertical clearance between the sides of the hood and the top of the quenching car.

In attempting to provide a suction at all points of clearance between the hood and the quenching car, very large fans and scrubbers are required with this arrangement. When equipped with two scrubbers of say, 100 horsepower each, this system provides only a fair performance when there is little or no wind, but with substantial wind large amounts of smoke and dust escape from one side of the hood while air is pulled into the other side.

Those skilled in the art will recognize from the following description that the present invention effectively eliminates pollution of the ambient air with dust and smoke as coke is being pushed from a coke oven chamber.

SUMMARY OF THE INVENTION

Apparatus for collecting dust and smoke which are generated as coke is being pushed from a coke oven chamber comprises a coke guide that is movable along the coke side of the battery and a coke quenching car that is movable along a path substantially parallel to the path traversed by the coke guide. A hood is movably mounted to the coke quenching car and is positionable in cooperation with the coke guide for receiving coke that passes through the guide. Means is provided to maintain the hood in position relative to the coke guide as the coke quenching car moves relative to the hood in order to distribute coke evenly in the coke quenching car. Equipment is provided on or adjacent the coke guide car to remove particulate matter and gasses from the hood.

For a further understanding of the invention and for advantages and features thereof, reference may be made to the following description taken in conjunction with the drawing which illustrates for the purposes of exemplification and embodiment of the invention.

BRIEF DESCRIPTION OF THE DRAWINGS

In the drawings:

FIG. 1 is a schematic plan view of a quenching car incorporating the invention shown in a position along side of coke oven battery;

FIG. 2 is a vertical elevational view, partly in section, along line II—II of FIG. 1;

FIG. 3 is a plan view along line III—III of FIG. 2 showing additional structure not shown in FIG. 2;

FIG. 4 is a vertical elevational view of the quenching car as viewed along line IV—IV of FIG. 1;

FIG. 5 is a schematic elevational view, partly in section of a modification of the apparatus of FIG. 2; and

FIG. 6 is a detail of a portion of the apparatus of FIG. 5.

DETAILED DESCRIPTION

FIG. 1 illustrates a schematic plan view of a portion of a coke oven battery **11**, particularly that portion at which a coke guide **13** and a coke quenching car **15** are positioned to receive coke that is ready to be pushed from a coking chamber **17**.

The quenching car **15** is provided with the usual wheels and axles **19** that cooperate with rails **21**, and the quenching car **15** has the usual inclined bottom **23** and discharge gate **25**, on the far side away from the coke oven battery **11**. The top of each one of the longitudinally extending side walls **27** of the quenching car **15** is provided with a channel section **29** that forms a track for rollers **31** that are mounted to a smoke and dust collecting hood **33**.

Further, the quenching car **15** is provided with a conventional coupler **32** that cooperates with a coupler extension **34** on a conventional coke quenching car locomotive (not shown).

The hood **33** has a generally rectangular shape in plan view with two vertical front and back walls **35** and upwardly inclined side walls that form a top, but the hood **33** has no bottom so that pushed coke can pass through the hood **33** into the coke quenching car **15**.

The vertical front wall **35** that faces the coke oven battery **11** is provided with a recess **37** that also has a generally rectangular opening **39** in the vertical wall of the recess. The opening **39** is surrounded by a frame **41** that is resiliently biased, as by springs **43**.

The hood **33** is also associated with a downwardly extending baffle plate **45** that is carried by the hood **33** in a manner to be described hereinafter. The baffle plate **45**, as shown in FIG. 2, is so shaped that it is close to, but yet is spaced slightly apart from, the sloping bottom **23** and the discharge gate **25**, for a purpose that will be apparent hereinafter.

The coke guide **13** is comprised of two cooperating portions **55**, **57** that are mounted on a coke guide car **59**. The coke guide car **59** is also provided with conventional wheel and axle assemblies **61** that coact with rails **63** secured to an oven bench structure **65**. From FIG. 3 it will be noted that the vertically and horizontally extending structural members **67** provide a fixed structure, mounted to the coke guide car **59**, for supporting opposed pairs of rollers **69**, **71** which coact with the respective coke guide portions **55**, **57** so that both respective portions **55**, **57** are movable toward and away from the hood **33** and the coke oven chamber **17** respectively.

As may be noted from FIG. 3 the coke guide portion **57** telescopes within the larger rectangular shaped portion **55**; the larger coke guide portion **55**, being movable on the roller **69**, is provided with a flange **73** that is adapted to coact with the frame **41** around the opening **39** and the hood **33**.

Further, the coke guide portion **55** is also provided with a pair of openings **75** in the vertical wall that faces the coke oven battery **11**, and each opening **75** receives a straight circular tail-end portion **77**, **79** of curved suction pipes **81**, **83** that are fixed to the structure **67**. The suction pipes **81**, **83** connect with a gas cleaning and scrubbing apparatus that may be suitably mounted on the coke guide car **59**.

The telescoping guide portion **57**, being movable on wheels **71**, is adapted to abut the vertical face of the coke oven chamber **17** from which coke is to be pushed. The outer end of the coke guide portion **57** is provided with stops **87** that cooperate with other stops **89** fixed to the outwardly moving guide portion **55**. Thus, when the two coke guide portions **55**, **57** are extended into operative relation with the coke oven chamber **17** and the frame **41** respectively, the stops **87**, **89** abut.

The supporting structure **67** also carries a pair of positioning cylinder-piston assemblies **91**, **93**, each of which is mounted in a horizontal position with piston rods **95**, **97** facing toward the quenching car **15**. The piston rods **95**, **97** carry rollers **91**, **101** at their outward free ends, as shown in FIG. 3. The cylinder-piston assemblies **91**, **93** may be actuated in any suitable manner to advance and retract the piston rods **95**, **97** for a purpose that will be explained hereinafter.

One form of apparatus **103** to actuate the piston rods **95**, **97**, and to advance and retract both the coke guide portion **57** and the portion **55** is shown in FIG. 2. Other suitable mechanism, such as fluid-actuated cylinder-pistons, rack and power driven pinions, and the like may occur readily to one having ordinary skill in the art.

The apparatus **103** includes, on each side of the supporting structure **67**, a quadrant **105** that is pivotally mounted on a shaft **107** which is driven by any suitable rotary power source, such as a motor-driven speed reducer **108**, or in any other suitable manner. The quadrant **105** has a rack face **109** that engages with a gear **111** mounted about where shown, and the gear **111** coacts with a rack **113** fixed to the piston rods **95** and **97**.

The apparatus **103** also includes a lever **115** that is pivotally mounted to a shaft **121** attached to the supporting structure **67** and the lever **115** is pivotally connected to links **118**, **119** that are connected to the coke guide portion **55**, and to the coke guide portion **57**. Suitable means,

such as a motor-driven speed reducer **120**, or other suitable apparatus, is provided for rotating the shaft **121**, whereby both of the coke guide portions **55**, **57** move simultaneously relative to the supporting structure **67**. Suitable means may be provided to synchronize the motor-driven speed reducers **108**, **120** and such movement may also be synchronized with the movement of the quadrant **105**. Thus, the coke guide portions **55**, **57** may be simultaneously moved into operative position, and the hood may also be properly positioned and secured to the coke guide portion **55** in a manner to be described hereinafter.

As mentioned previously, the baffle plate **45** is carried by the hood **33** and one apparatus for carrying the baffle plate is illustrated in FIGS. 1 and 4.

The baffle plate **45** is suspended from a transversely extending bar or rod **123** that coacts with notched plates **125** positioned on the under side of the hood **33** about where shown in FIGS. 1 and 4. Adjacent the right hand end wall **127** of the quenching car **15**, as viewed in FIGS. 1 and 4, there are two spaced apart baffle plate retainers **129** that are secured to the sides of the quenching car **15**. These baffle plate retainers **129** have an open ended, U-shape as shown, to engage the bar or rod **123** and thereby support and retain the baffle plate **45** in one position adjacent the right hand end wall **127**. Of course, other suitable means may be provided to engage and carry and retain the baffle plate **45** if preferred.

While the invention is illustrated in association with a non-tilting quenching car, it is understood that it may be used also with tilting bottom type quenching cars.

Now, when it is necessary to push coke from a coking chamber, such as chamber **17** for example, the coke guide **13** is positioned at the chamber **17**, as shown in FIG. 1, and the coke quenching car is brought into position adjacent the coke guide. Initially, following a previous cycle of operations, the hood **33** will be located at the right hand end of the coke quenching car **15**, about where shown in phantom in FIG. 4. The coke quenching car then is maneuvered until the hood opening is approximately aligned with the longitudinal axis of the coking chamber and with the coke guide. Thereafter, the motor-driven speed reducer **108** actuates the quadrant **105** to advance the piston rods **95**, **97**. As the piston rods **95**, **97** advance, the rollers **99**, **101** cooperate with the bevelled portions **53** and the hood, being freely movable laterally on the coke quenching car **15**, becomes centered with respect to the common axes of the chamber **17** and the coke guide **13**.

Simultaneously, the motor-driven speed reducer **120** actuates the guide portion **57** up against the face of the coke oven chamber, and the coke guide portion **55** against the frame **41**. The frame **41**, being resiliently mounted, is disposed in close relation to the coke guide portion **55**.

Thereupon, the coke quenching car **15** is moved towards the right, as viewed in FIG. 1, until the hood is positioned at the left hand end of the coke quenching car.

Initially, the baffle plate **45** is also at the right hand end of the coke quenching car **15**, and when the coke quenching car moves toward the right, the bar or rod **123** of the baffle plate engages the notched plates **125**, and the baffle plate then is carried by, and remains stationary with respect to, the hood. When the hood becomes positioned at the left hand end of the coke quenching car, the baffle plate is at the right hand end of the hood, as viewed in FIG. 4.

As coke is pushed from the coking chamber **17**, the coke falls into the coke quenching car that is moved laterally by the locomotive in order to distribute the coke uniformly in the car. The baffle plate provides a partial seal at the right hand end of the hood to limit the amount of air entering the hood during pushing. The coke in the quenching car provides a partial air seal at the left hand end of the hood. When the hood is at the left hand end of the quenching car at the start of the coke pushing, suitable plate structure **131** of the car provides an air seal

to minimize the air pulled in at this point. Thus, practically all of the dust, dirt, and smoke emitted by the pushed coke passes into the suction pipes **81**, **83** and into suitable scrubbing apparatus carried on the coke guide car.

If it is necessary or desirable to further reduce the opening under the baffle at the right hand end of the hood, and the opening between the coke and the left hand end of the hood after the start of the push, flexible baffles or curtains can be provided at these points. Such an extension under the baffle at the right hand end of the hood must be capable of passing over the structural members extending upward into the body of the quenching car at several locations. The flexible baffle or curtain suspended from the left hand end of the hood, if provided, must be capable of passing over the bed of coke in the quenching car, and must also be arranged to remain suspended just inside the baffle **45** when the hood is in the farthest position for quenching beyond the right hand end of the quenching car, or be capable of passing back and forth over the top of baffle **45** and the right hand end of the quenching car.

Such a flexible baffle or curtain can, for example, be made of rectangular pieces of stainless steel plate linked together with rings welded to the top and bottom of the plates and horizontal rods passing through the rings. By adding or removing pieces of plate, the flexible baffle or curtain can be adjusted in the field to close a large percentage of the open area under the ends of the hood.

By the time all of the cone has been pushed from the coking chamber, the hood will be located at the right hand end of the coke quenching car. The baffle plate moves with the hood until the baffle plate engages the baffle plate retainers which keep and maintain the baffle plate at the right hand end of the coke qeunching car, where shown in FIG. 4. Actually, the hood moves onto an extension of the coke quenching car, as suggested in FIGS. 1 and 4, so as not to interfere with quenching water during the quenching operations.

Then, the quadrant may be actuated to retract the piston rods and the wheels from coacting with the hood and the lever may be pivoted to telescope the coke guide portions.

Thereafter, the quenching car moves to the quenching station where the coke is quenched in the normal manner. The hood, may be suitably locked in the position at the right hand end of the coke quenching car in any suitable manner during the travel to and from the quenching station.

Those skilled in the art will recognize that the hood of the present invention fits relatively close to the quenching car in the location where coke is discharged into the car, and it is not necessary to provide vertical clearance under the ends of the hood for the cab of the quenching car locomotive.

Further, because the hood is mounted on the quenching car as it is, a closer clearance can be maintained between the sides of the hood and the top of the sides of the quenching car.

Since the hood prevents the locomotive operator from seeing the coke as it falls into the quenching car, it is proposed to provide an indicator in the cab of the locomotive that will indicate the relative position of the pusher ram and the quenching car in terms of percentage of travel from their respective initial positions at the start of a push. By keeping these indicated positions together during the push, the locomotive operator can move the quenching car in a way that assures a smooth and even "catch" of the coke with a good distribution of coke in the quenching car.

While the foregoing description is directed to the novel apparatus illustrated in FIGS. 1–4, FIGS. 5 and 6 show a modified apparatus that is in accordance with the invention.

In FIG. 5, substantially all of the structure there shown is the same structure shown in FIG. 2 except for the following principal differences, and some details, shown in FIG. 2, are omitted from FIG. 5, for clarification purposes.

In FIG. 5, a quenching car **133** is provided wtih conventional wheel and axle assemblies **135** that are mounted on rails **137** that are fixed about where shown in relation to a coke oven battery **139** and a bench **141** alongside the coke side of the coke oven battery **139**. The bench supports other rails **143** on which there is mounted a wheeled coke guide car **145** that is similar to the coke guide car **59**. The coke guide car **59** carries a coke guide **147** that is substantially like the coke guide **13** of FIG. 2, except as noted hereinafter.

On the coke quenching car **133**, there is a hood **149** that is rollably mounted thereto as is the hood **33** of FIG. 2. However, the hood **149** is provided with an outwardly extending duct **151** that terminates some short distance from an adjacent vertical wall **153** of an elongate duct **155**. The outward end portion of the duct **151** is provided with a telescoping section **157** and a mechanism **159** for moving the telescoping section **157** toward and away from the duct **155**.

The elongate duct **155** is supported in one position, shown in FIG. 5 in solid lines, alongside the hood **149** and upon structural supports **161**. The elongate duct **155** has a plurality of rectangular-shaped openings **163** in the vertical wall **153**; actually, there is an opening **163** opposite each coke oven chamber **165** of the coke oven battery **139**. Each such opening **163** is fitted with a hinged covering **167** that is pivotable about hinge **169** fastened to the top of the covering **167** and to the inside of the wall **153**.

The mechanism **159** comprises a fixed shaft **171** that extends across the duct **151** and that projects outwardly on both sides of it. To the outwardly projecting ends of the shaft **171** there are fixed lever arms **173**. The free ends of the arms **173** are pivotally connected to a piston rod **175** that forms part of a cylinder-piston assembly **177**. Within the duct **151** and also secured to the shaft **171** are other lever arms **179**. The top and the bottom ends of the lever arms **179** are pivotally connected to horizontally extending links **181** and **183**. The link **183** is pivotally connected at **185** to the telescoping portion **157** for moving such portion horizontally toward and away from the elongate duct **155**. The other link **181** is pivotally connected to another elongate link **187** that has an elongate slot **189** in it and a roller **191** journaled to its free end. A pin **193**, fixed to the telescoping portion **157**, coacts with the slot **189** of each lever arm **187**.

Initially, the telescoping portion **157** is retracted to the position shown in solid outline in FIG. 6, and the covering **167** is in the closed or solid outline position. When the hood **149** and the coke guide **147** are aligned and coupled together as described previously herein, the cylinder-piston assembly **177** is actuated from any remote location so that the piston rod **175** retracts. As it retracts the piston rod **175** pivots the lever arms **173** counterclockwise about the shaft **171** and the internal lever arms **179** also pivot counterclockwise. Both of the lever arms **173** and **179** pivot to the dotted outline position shown in FIG. 6.

As the lever arm **179** pivots counterclockwise, the link **183** moves laterally toward the right and carries with it the telescoping portion **157**. Simultaneously, the link **181** moves laterally toward the left (as viewed in FIG. 6) and pivots counterclockwise the lever arm **187** about the fixed pin **193**. The combined lateral movement of the telescoping portion with pin **193** and the counterclockwise pivoting of the lever **187** urges the roller **191** toward the covering **167**. The roller coacts with the hinged covering **167** and pivots it about hinge **169** inward to the position shown in dotted outline in FIG. 6.

The telescoping portion **157** is provided with an angle **195** on its top and bottom surfaces and this angle abuts

the vertical wall to limit the penetration of the telescoping portion into the opening **163**.

In practice, the elongate duct **155** is under a slight vacuum internally wherefore smoke and gases that are collected by the hood during the pushing operation, are drawn from the hood through the duct **151** and the telescoping portion **157** into the elongate duct **155**.

The elongate duct **155** is connected to a fixed suction means and gas cleaning means, such as a fan and scrubber or precipitator. Gases and particulate matter in the gases are pulled through the duct **155** and are cleaned before they are discharged to the atmosphere. This arrangement eliminates the need to carry the suction and cleaning apparatus on the coke guide car.

When pushing is accomplished, the cylinder-piston is actuated again to extend the piston rod and the telescoping portion retracts. Also, the covering closes the opening in the elongate duct. So, too, the coke guide is drawn and the quenching car is ready to move to the quenching station.

FIG. 5 illustrates in dotted outline another arrangement of elongate duct **155***a* and duct **151***a*. The elongate duct **155***a* is mounted to the coke oven battery **139** and the duct **151***a* is provided with a telescoping portion **157***a* that operates in the same manner as is described herein.

Those skilled in the art will recognize, from the foregoing description of one embodiment and a modification of the invention, several significant features and advantages, among which are:

That the device of the invention effectively eliminates dust and smoke that generally pollute the atmosphere when coke is being pushed from a coking chamber;

That the device of the invention is readily adaptable to new and existing coke oven facilities; and

That the device of the invention is effective in collecting and scrubbing gases emitted during the coke pushing operation.

What is claimed is:

1. In a coke oven battery having a plurality of coking chambers from the coke side of which coke is periodically pushed, the improvement comprising:

(a) a coke guide that is movable along a path parallel to the coke side of said battery and that is alignable with a coking chamber from which coke is to be pushed;

(b) a coke quenching car that is movable along a path substantially parallel to the path traversed by the coke guide;

(c) a hood movably mounted to said coke quenching car, said hood being positionable in cooperation with said coke guide for receiving coke that passes through said coke guide; and

(d) means to keep and maintain said hood in position relative to said coke guide as said coke quenching car moves while coke is passing through said guide and hood and is being deposited in said coke quenching car.

2. The invention of claim **1** including:

(a) means mounted to said coke guide and communicating with said hood for collecting dust and particulate matter given off by said coke as it is deposited in said coke quenching car.

3. The invention of claim **1** wherein:

(a) said coke guide comprises:

(i) a first portion that telescopes into,

(ii) a second portion, with both portions being movable into abutting relation with said coking chamber and said hood whereby coke and gases do not escape from said coke guide as they pass through said coke guide.

4. The invention of claim **1** wherein:

(a) said means to keep and maintain said hood in position comprises:

(i) at least one recess in said hood,

(ii) at least one fluid actuatable ram mounted to said coke guide, and

(iii) means to actuate said ram and move it into engagement with a respective recess in said hood whereby it holds said hood stationary as said coke quenching car moves relative to said hood.

5. The invention of claim **4** including:

(a) means for restricting the flow of air into said hood when coke is passing through said hood and as said coke quenching car moves relative to said hood.

6. In a coke oven battery having a plurality of coking chambers from the coke side of which coke is periodically pushed, the improvement comprising:

(a) a coke guide that is movable along a path parallel to the coke side of said battery and that is alignable with a coking chamber from which coke is to be pushed, said coke guide including:

(i) a first movable portion that telescopes with

(ii) a second movable portion;

(b) a coke quenching car that is movable along a path substantially parallel to the path traversed by said coke guide;

(c) a hood movably mounted to said coke quenching car, said hood being positionable in cooperation with said coke guide and having an opening therein through which said coke passes when said hood and said coke guide are in axial alignment with said coking chamber from which coke is being pushed;

(d) means to keep and maintain said hood and said coke guide in fixed relative positions while coke is passing therethrough and as said coke quenching car moves relative to said hood;

(e) means for restricting the flow of air into said hood when coke is passing therethrough,

(f) means coacting with said hood for collecting dust and particulate matter given off by said coke as it is being deposited in said coke quenching car; and

(g) means for moving both said portions of said coke guide into engagement with said coke battery and said hood.

7. The invention of claim **6** wherein:

(a) said means to keep and retain said hood and coke guide in position includes,

(i) at least one expandable member mounted to said coke guide that is engageable with said hood.

8. The invention of claim **7** wherein:

(a) said means includes a baffle disposed beneath said hood and within said coke quenching car.

9. In a coke oven battery having a plurality of chambers from the coke side of which coke passes through a coke guide the combination comprising:

(a) a coke quenching car that is movable along the coke side of said battery for receiving coke pushed from a chamber of said battery; and

(b) a hood movably mounted to said coke quenching car and cooperative with said coke guide wherefore said pushed coke passes through an opening in said hood and into said quenching car as it moves relative to said hood.

10. The invention of claim **9** including:

(a) an elongate duct disposed adjacent said coke side of said coke oven battery, said duct having

(i) a plurality of openings in one wall with each opening being located relative to respective coke oven chamber, and

(ii) a movable closure over each said opening in said duct, and

(iii) means to move said closure and to carry gases and entrained particulate matter from said hood through said opening into said duct as coke is being pushed from a coke oven chamber.

11. The invention of claim **10** wherein:

(a) said means to move said closure and to carry gases into said duct includes:

(i) a movable conduit carried by and communicating with said hood that is adapted to coact with said opening in said duct, and

(ii) a lever pivotally mounted to said hood that connects to linkage engageable with said movable duct and said closure, and

(iii) means for pivoting said lever whereby said linkage is actuated to bring said movable conduit into cooperation with said duct and simultaneously to move said closure and to admit gases into said dust.

12. The method for collecting dust and smoke emitted from coke as it is being pushed from a coke oven chamber through a coke guide into a coke quenching car comprising the steps of:

(a) aligning said coke guide with said coke oven chamber from which coke is to be pushed;

(b) positioning a hood on said quenching car in axial alignment with said chamber and coke guide;

(c) moving the coke guide into engagement with said hood and thereby securing said hood in position relative to said coke guide;

(d) moving said quenching car relative to said hood as coke is pushed from said oven chamber;

(e) limiting the amount of air entering the hood during the pushing of said coke;

(f) removing from the hood the smoke and gases

emitted from said pushed coke as said pushing continues, and simultaneously;

(e) cleaning said gases of smoke and particulate matter.

13. The invention of claim **10** including:

(a) suction means connected to said duct whereby gases entering said duct are removed through said duct; and

(b) gas cleaning means associated with said suction means whereby said gases are cleaned before being discharged to the atmosphere.

References Cited

UNITED STATES PATENTS

3,547,782	12/1970	Schon	202—263 X
3,520,425	7/1970	Stender	202—262 X
3,464,894	9/1969	Tatterson	202—262
3,367,844	2/1968	Cremer	202—227

NORMAN YUDKOFF, Primary Examiner

D. EDWARDS, Assistant Examiner

U.S. Cl. X.R.

214—23