United States Patent [19]

Leeson

[11] **3,765,253**

[45] **Oct. 16, 1973**

[54] **SPEED CHANGING MECHANISM**

[76] Inventor: **Patrick George Leeson,** Charnwood, 27 Swithland Ln., Rothley, Leicestershire, England

[22] Filed: **July 26, 1971**

[21] Appl. No.: **165,903**

[30] **Foreign Application Priority Data**

Aug. 1, 1970 Great Britain 37,256/70

[52] **U.S. Cl.** **74/55,** 74/63

[51] **Int. Cl.** **F16h 25/08**

[58] **Field of Search** 74/567, 569, 63, 74/55; 192/66; 91/466

[56] **References Cited**

UNITED STATES PATENTS

1,870,875	8/1932	Scheuer	74/63
2,704,459	3/1955	Nanni	74/63
3,302,471	2/1967	Lane	74/63
3,507,159	4/1970	Batty	74/63
1,172,048	2/1916	Reiche	74/567
1,783,589	12/1930	Shepard	74/55

Primary Examiner—Charles J. Myhre
Assistant Examiner—Wesley S. Ratliff, Jr.
Attorney—Larson, Taylor & Hinds

[57] **ABSTRACT**

A speed changing mechanism having a rotary or linear motion and comprising a component provided with a recessed track made up of a number of sections, each including a recess, which are all of one shape and are joined together end-to-end; a component provided with a cam track; and an array of rolling body units, each of which is linearly movable and comprises two rollers arranged respectively in constant contact with the recessed track and the cam track in operation, the number of units being different to the number of recesses. At least one rolling body unit is connected to a piston/cylinder unit. Fluid pressure is either delivered to the unit to move the rolling body unit (s) linearly and drive the mechanism, or the piston/cylinder unit is used to transmit fluid pressure produced by linear movement of the rolling body unit when the mechanism is driven from an external power source.

10 Claims, 4 Drawing Figures

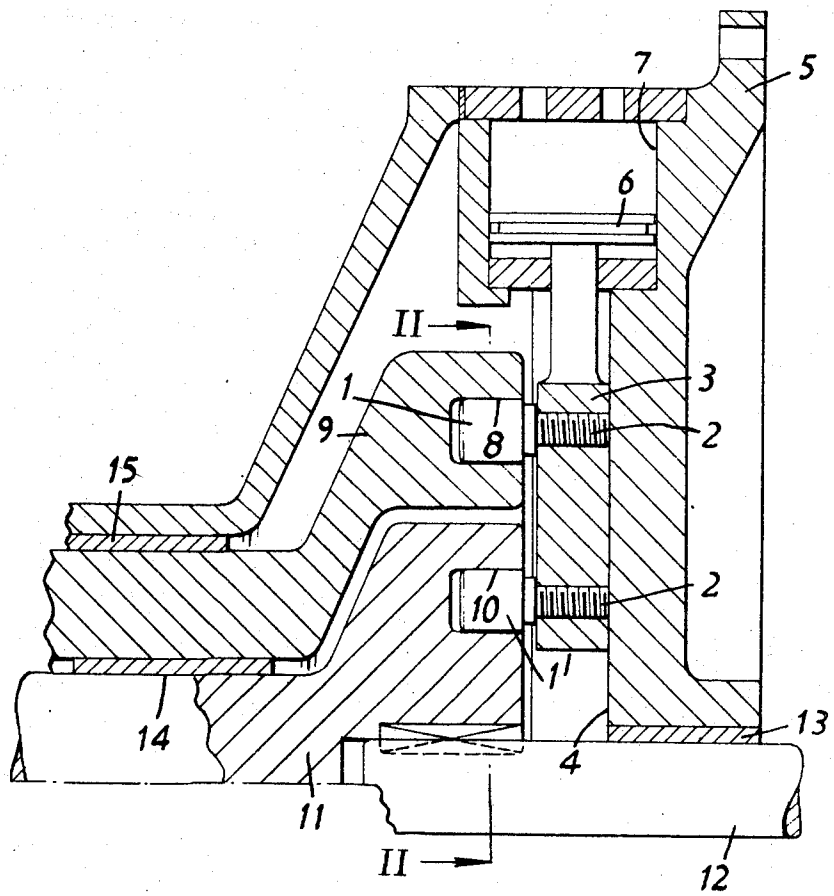

FIG. 1.

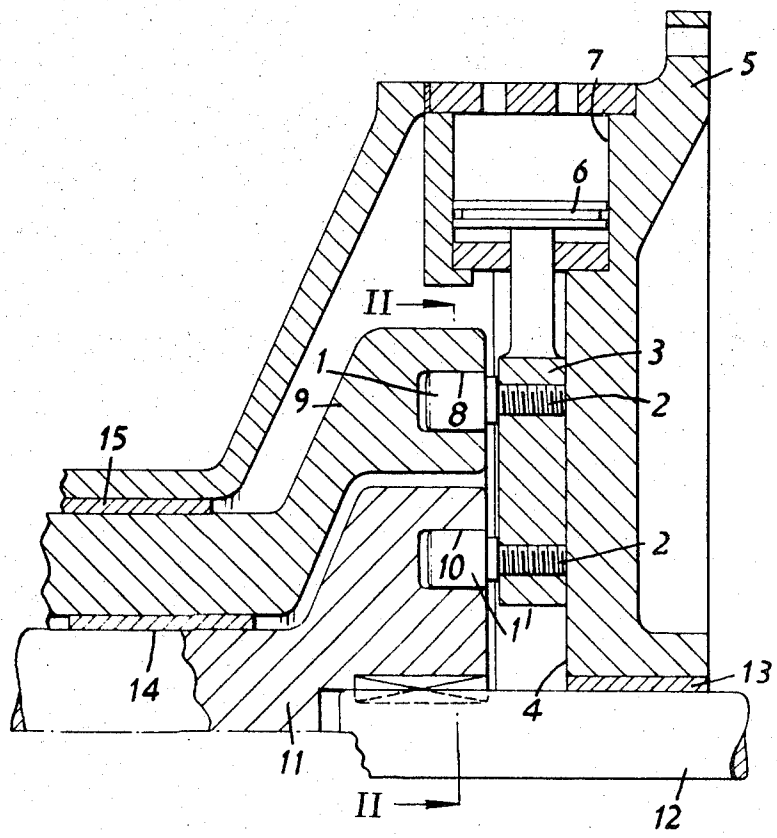

FIG. 2.

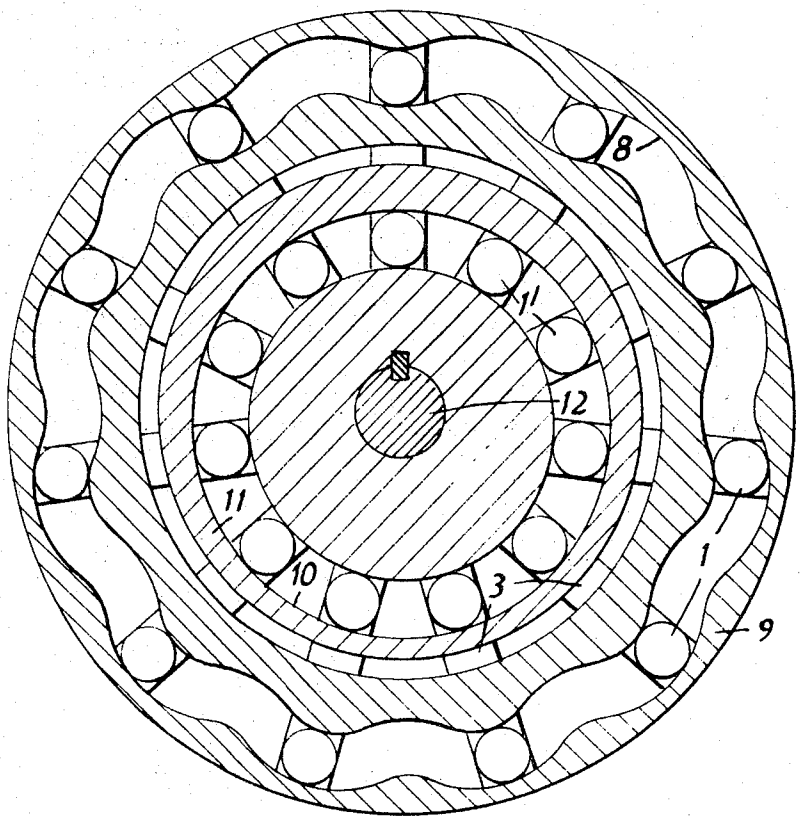

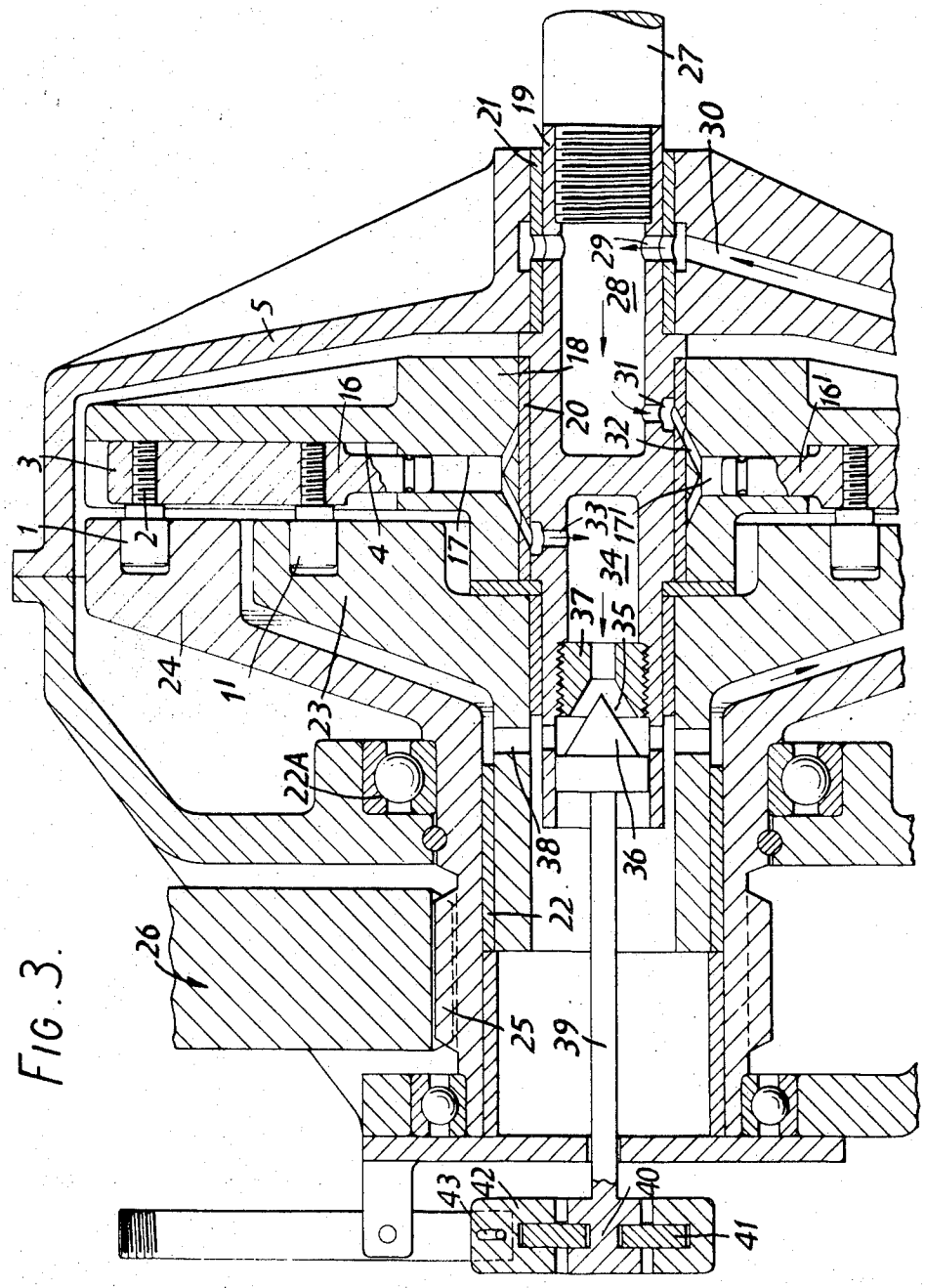
1
2
3
4
5
11
16
16'
17
17'
18
19
20
21
22
22A
23
24
25
26
27
28
29
30
31
32
33
34
35
36
37
38
39
40
41
42
43

FIG. 3.

FIG. 3a.

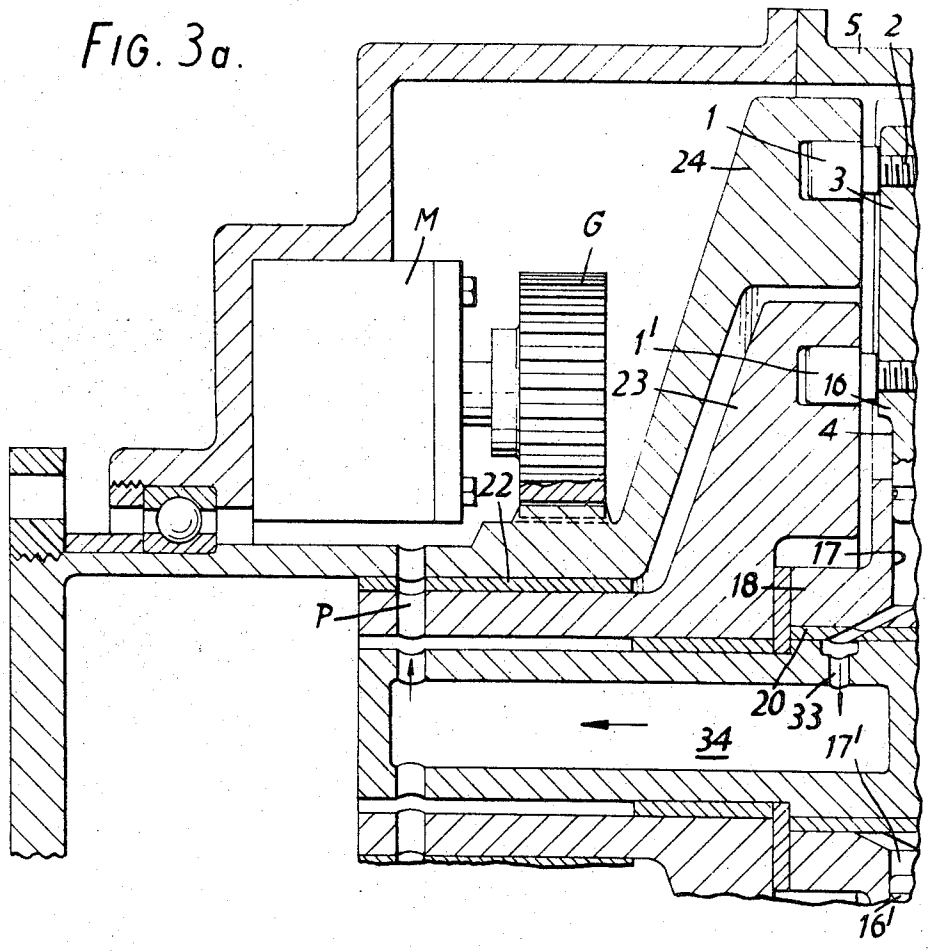

SPEED CHANGING MECHANISM

This invention relates to speed changing mechanisms.

In particular, the invention is concerned with speed changing mechanisms of the kind comprising a cam track, a recessed track having an array of identical sections evenly spaced from one another and each including a recess, and an array of identical units each comprising one or more rolling bodies, which units are in constant contact with both the tracks and are movable relatively to one another, seriatim, into and out of driving engagement with the sections of the recessed track under the control of the cam track. Thus, such a mechanism has three basic components — one formed with the cam track, one formed with the recessed track and one carrying the rolling body units arranged at equal spacings from one another and movable relatively to the components. A mechanism of this kind will hereinafter be referred to as a speed changing mechanism of the kind concerned.

The invention has, in fact, been devised primarily in connection with the speec changing mechanism forming the subject of U.S. Pat. No. 3,507,159. In this mechanism the shape of the recessed track consists of at least two portions defined by either at least two different general mathematical formulae or a general mathematical formula having at least one constant and the same mathematical formula having at least one different constant, the shape of the cam track being a generation of the shape of the recessed track. It is to be understood that there is no limitation in this regard.

Speed changing mechanisms of the kind concerned can have either a rotary or a linear motion. The rolling body units may be of various forms ranging from single bodies of spherical or cylindrical shape to groups each of two or more such bodies connected to move together. Usually, in operation, an external power source is arranged to produce relative movement between any two of the components and this results in the third component being driven.

It will be appreciated that in a mechanism of the kind concerned the rolling body units each move linearly in a direction at or substantially at right angles to the general planes containing the recessed and cam tracks, i.e. in a radial direction relatively to the common axis of the three components in a rotary mechanism or in a direction perpendicular to the linear motion produced in a linear mechanism.

The object of the present invention is to utilise this linear motion of the rolling body units in speed changing mechanisms of the kind concerned.

Broadly considered, the speed changing mechanism according to the invention is characterised in that at least one of the rolling body units has associated therewith means for either transmitting energy from an external source of power to the unit to cause it to perform its linear movement whereby two or three of the components of the mechanism are driven, or for transmitting to external means energy produced by the linear movement of the unit caused by the movement of two or three of the components of which at least one is driven by an external source of power.

Thus, the idea is that in one alternative the energy input to the mechanism is applied to at least one of the rolling body units in contrast to one or two of the components as in known arrangements, and this arrangement enables the mechanism to provide two different power energy outputs. In the other alternative, wherein the energy input is applied to at least one of the components as in known arrangements, the existing linear movement of at least one of the rolling body units is harnessed to provide a further energy output in addition to that or those already provided by one or two of the components.

In implementing the invention, the said means associated with the rolling body unit concerned may comprise a piston/cylinder unit the piston of which is connected to the unit.

The invention also provides, according to one embodiment, an infinitely variable speed changing mechanism. Thus, in the second alternative mentioned above, means may be provided to restrict the said further energy output so as to impede the movement of the rolling body unit and thereby control the relationship between the speeds of movement of the components carrying the tracks.

When the restrictor is in its minimum restriction position, the mechanism will operate normally, providing a pre-determined speed relationship between the two components. As the restriction is varied the relationships will vary in proportion. If the energy flow is stopped completely, the linear movement of the rolling body units ceases and the three components of the mechanism must rotate together. Obviously, provision will have to be made to allow the component carryinG the rollIng body units to rotate.

In order that the invention may be more clearly understood and readily carried into practice, two embodiments of speed changing mechanisms according to the invention will now be described, by way of example, with reference to the accompanying drawings, in which:

FIG. 1 is a partial longitudinal sectional view of a speed changing mechanism according to one embodiment,

FIG. 2 is a transverse sectional view on line II — II of FIG. 1,

FIG. 3 is a view similar to FIG. 1 of the second embodiment, and

FIG. 3*a* is a view similar to FIG. 2 of an alternative embodiment.

The two embodiments illustrated in the drawings are rotary mechanisms, but it is to be understood that the principles of the invention can also be applied to linear mechanisms.

The speed changing mechanism illustrated in FIG. 1 has an annular series of units each comprising two cylindrical rollers **1**, **1'** rotatably mounted by studs **2**, **2''** on a slide body **3** which is free to slide in a slot **4** formed in a fixed casing **5**. At its end remote from the axis of the mechanism each slide body **3** is extended to form a piston rod to which a piston **6** is attached, this piston operating in a cylinder **7** incorporated in the casing **5**.

The rollers **1** are in contact with a recessed track **8** formed on a member **9**, and the rollers **1'** are in contact with a cam track **10** formed on a member **11** which is attached to a shaft **12** free to rotate in a bearing **13** held in the casing **5**. The members **9** and **11** are free to rotate relative to each other on the interposed bearing **14** and the member **9** rotates within the bearing **15** affixed to the casing **5**.

In one method of actuating the mechanism, hydraulic fluid is supplied to and exhausted from cylinder **7**

through ports 7*a*, 7*b* from a conventional hydraulic pump (not shown) to cause the rolling body unit comprising the rollers **1** and **1'** and the slide body **3** to move linearly in a radial direction. This causes the two members **9** and **11** to rotate at different speeds but in constant ratio one to another and to the number of strokes of the piston **6** in a given time. It will be appreciated that the energy supplied to the cylinder **7** may be produced by any appropriate means involving, for example, the use of hydraulic fluids under pressure, ignition of combustible gases or any other suitable energy source.

The speed relationships between members **9** and **11** depend on the number of lobes in the recessed and cam tracks of the respective members **9** and **11** and the number of units **1, 1', 3.** For example if (as in the illustrated embodiment) there are one lobe on cam track **10,** 12 lobes (and hence recesses) on recessed track **8** and 11 units, the member **11** will rotate once for each stroke of the piston **6** whilst the member **9** will rotate in the opposite direction to the extent of one-twelth of a revolution.

Alternatively, if the number of units is increased to thirteen, the members **9** and **11** will rotate in opposite and reversed directions but with the same speed relationships relative to each other as before.

It will be appreciated that one or more of the rolling body units can be driven at will so that the input energy can be varied within the design parameters according to the numbers of cylinders incorporated in the mechanism limited only by the number of units provided.

The known method of supplying energy to a speed changing mechanism is to apply a rotating source of power to one of the three components provided with the cam track, the recessed track and the units respectively, i.e. one of the components **5, 9** and **11** in the embodiment shown. In this case, the same speed relationships obtain as referred to above. From the foregoing, however, it will be appreciated that each cylinder **7** and piston **6** can now be used as a pump since the piston is being driven, i.e. as a means of transmitting a part of the total energy input, the rest of this input necessarily being transmitted mechanically through the component which is not driven or fixed.

Thus, FIG. **1** shows two ways of putting the linear motion of the rolling body units to practical effect. It will be appreciated that the potential applications of this arrangement are extremely diverse and many have considerable commercial significance.

For example, and again with reference to FIG. **1,** the mechanism can be used as a motor having two different rotary output speeds with input energy applied to the cylinder **7.** Alternatively, the mechanism can be used to provide one rotary output of a reduced or increased speed and one hydraulic output with one rotary input applied to one or other of the members **9** and **11.** The hydraulic output can be used, for example, for driving a hydraulic motor or for hydraulically braking the rotary mechanical output of the mechanism by restricting the outlet flow from the cylinder **7** and thus hindering the free action of the piston **6.** Clearly a mechanical braking effect is also possible, without the use of friction shoes, purely by preventing the linear motion of th rolling body units.

In FIG. **1** the two members **9** and **11** are free to rotate but the casing **5** is fixed. If all three components of a speed changing mechanism are arranged so as to be rotatable in relation one to another and the linear motion of the rolling body units is utilised, a considerable number of new industrial applications can be envisaged, which have significant commercial possibilities. For example, there is a need for a reasonably priced, infinitely variable, speed reducing mechanism capable of operating over a wide speed range. An inexpensive solution to this problem, utilising the novel principles already referred to, is illustrated in FIG. **3** wherein some like parts are designated by the same reference numerals.

Referring to FIG. **3,** it can be seen that whilst the ro'lers **1** and **1'** and the studs **2** and **2'** are similar to the arrangement illustrated in FIG. **1,** the extension to the slide body **3** is cylindrical and forms a combined plunger and piston **16** which extends towards the axis of the mechanism and reciprocates within a cylinder **17** formed in a cage **18.** This cage rotates on a shaft **19** via a bearing **20.** The shaft **19** is free to rotate within bearings **21** set in the casing **5.** Similarly the other two members **23** and **24** are free to rotate, being mounted respectively on and within plain bearings **22** and ball bearings **22A** set in the casing **5.** Teeth **25** cut in the member **23** mesh with teeth on a spur wheel **26** which is part of the driven mechanism (not shown).

It will be appreciated that if the cage **18** is held fixed relative to the casing **5,** and the shaft **19** is rotated, the mechanism will act as a speed reducing mechanism, the member **24** acting as the output member provided the hydraulic arrangement incorporated is inoperative. However, the shaft **19** has formed therein a cavity **28** which is closed by a plug shaft **27,** so that oil can be drawn from a sump (not shown) via an oil channel **30** and holes **29** and **31** in the shaft **19** into the cylinder **17'** by the action of the plunger **16'** moving in a direction away from the axis of the mechanism.

The hydraulic fluid in the cylinder **17** is forced out as the plunger **16** moves towards the axis since the valve-timing of the mechanism is so arranged that a hole **33** in the shaft **19** is opposite the outlet from the cylinder **17,** so that the fluid flows into a second chamber **34** within the shaft **19,** through a plug **37** at the end of the chamber **34,** via a conical aperture **35** and a hole **38** back into the sump. This flow can be restricted or entirely stopped by the action of the conical plug **36** which is rotatably connected through a thrust washer **41** to a yoke **42.** An actuating lever **44** is rotatably fixed to the casing **5** by a pivot and lug **43** and to the yoke **42** by a pin and slot **45.** Thus, movement of the lever **44** causes the conical aperture **35** to be restricted or closed by the plug **36.**

In operation of the mechanism, a rotating power source is coupled to the plug shaft **27.** If the conical plug **36** is withdrawn completely giving no resistance to the free flow of the hydraulic fluid through the circuit described, the member **23** will rotate freely and no drive through member **24** to the spur wheel **26** can take place against the resistance of this spur wheel attached to the driven mechanism. If, however, the plug **36** is moved to restrict the flow through the aperture **35** by action of the lever **44,** the free action of the slide body **3** and hence that of the entire rolling body unit will be impeded resulting in the member **24** rotating at a speed proportional to the degree of restriction of the fluid flow. If, by action of the lever **44,** the fluid flow is stopped entirely the three components of the mechanism must rotate together so that the member **24** ro-

tates at the same speed as the input shaft **19** and plug shaft **27** ignoring any possible hydraulic leaks.

Thus, an infinitely variable ratio between zero and input speed is achieved in a relatively simple and therefore cheap form of speed changing mechanism using the novel principles of the invention.

It will be appreciated that the timing arrangements of the parts permitting the fluid flow to and from the cylinders **17, 17'** can be implemented in a simple manner in the type of speed changing mechanism illustrated in FIG. **2.** A groove cut on the outer periphery of the shaft **19** over 180° and a groove over the opposite 180° with appropriately spaced holes connecting the cylinders **17, 17'** and the chamber **28** and **34** is all that is required.

Hitherto it does not seem to have been realised that speed changing mechanisms lend themselves to simple valve timing arrangements of the kind illustratd because the mechanical arrangement, once determined, ensures a fixed speed relationship between all three components of the mechanism and the number of linear radial strokes of the rolling body units as mentioned earlier.

In more exacting, infinitely variable applications some further measures may need to be taken thereby adding to the sophistication of the arrangement shown in FIG. **2.** For example, a known mechanically or hydraulically operated device may be needed to prevent slip at the top 1 : 1 ratio that can occur due to hydraulic losses. Further, it is evident in the intermediate speed range that the fluid will be heated by flowing through the restricted aperture **35** resulting in some degree of inefficiency due to loss of energy. This energy loss can be virtually eliminated by using the hydraulic fluid fed under pressure into the chamber **34** by action of the combined piston and plunger **16** to drive a motor which does useful work. If the motor is mounted on one of the components of the mechanism and so arranged that it will drive another one of the components, (e.g. components **24**) in a manner already known in conventional epicyclic tooth-geared mechanisms, it can use the energy that would otherwise have been lost.

FIG. *3a* shows the mechanism of FIG. **3** modified in accordance with this embodiment. In this case, fluid pumped along passageway **34** is delivered through porting P to a variable speed gear motor M which drives member **24** through a gear wheel G.

From the foregoing it will be appreciated that the use of the linear movement of the rolling body units in a speed changing mechanism in the novel manner described leads to a number of useful mechanical arrangements with considerable commercial potential.

I claim:

1. A speed changing mechanism of the kind comprising a first component formed with a cam track; a second component formed with a recessed track having an array of identical sections evenly spaced from one another and each including a recess; and a third component carrying an array of identical units each comprising one or more rolling bodies, which units are in constant contact with both the tracks and are movable relatively to one another, seriatim, into and out of driving engagement with the sections of the recessed track under the control of the cam track so as to control the relative speeds of said first and second components, said units being arranged at equal spacings from one another and linearly movable relatively to the components, said cam track and said recessed track being so formed as to provide for a speed differential between said first and second components, wherein the improvement comprises energy transmission means associated with at least one of said rolling body units, whereby energy delivered to said means from an external source of power can be transmitted to the unit to cause it to perform its linear movement whereby at least two of the components of the mechanism are driven, or energy produced by the linear movement of the unit caused by the movement of two or three of the components of which at least one is driven by an external source of power can be transmitted to external means.

2. A mechanism according to claim **1,** wherein the said energy transmission means comprise a piston/cylinder unit, the piston of which is connected to the rolling body unit.

3. A mechanism according to claim **1** arranged to transmit energy produced by the linear movement of the unit, wherein means are provided to restrict the transmitted energy so as to impede the movement of the rolling body unit and thereby control the relationship between the speeds of movement of the components carrying the tracks.

4. A mechanism according to claim **1,** wherein the recessed track and the cam track are arranged side by side so as to face in the same direction, each rolling body unit comprising two rolling bodies which engage the recessed track and the cam track respectively and are coupled together for movement in unison.

5. A mechanism according to claim **4,** wherein the two rolling bodies in each unit are mounted on a slide body which is free to slide in the component carrying the rolling body units.

6. A mechanism according to claim **5,** wherein the rolling bodies are cylindrical rollers.

7. A mechanism according to claim **1,** which is of rotary form, wherein the cam track and recessed track are of annular form being arranged side by side with one surrounding the other.

8. A mechanism according to claim **7,** wherein the components carrying the said tracks each have a cylindrical extension, the extensions being rotatable relatively to one another and one extension being housed inside the other.

9. A mechanism according to claim **8,** wherein it is housed in a casing arranged to form the said component carrying the rolling body units.

10. A mechanism according to claim **1** arranged to transmit energy produced by linear movement of at least one rolling body unit, wherein it further includes a motor which is arranged to be driven by this transmitted energy and is itself arranged to drive one of the components of the mechanism.

* * * * *