(12) PATENT **(11)** Application No. **AU 199654485 B2**
(19) AUSTRALIAN PATENT OFFICE **(10)** Patent No. **706499**

(54) Title
Shaving implement

(51)[6] International Patent Classification(s)
B26B 021/40

(21) Application No: **199654485** (22) Application Date: **1996.04.10**

(87) WIPO No: **WO96/35558**

(30) Priority Data

(31) Number	(32) Date	(33) Country
08/439058	**1995.05.08**	**US**

(43) Publication Date : **1996.11.29**
(43) Publication Journal Date : **1997.01.23**
(44) Accepted Journal Date : **1999.06.17**

(71) Applicant(s)
Warner-Lambert Company

(72) Inventor(s)
Ernest Albert Ortiz; Evan Nai-Keung Chen

(74) Agent/Attorney
BALDWIN SHELSTON WATERS,Level 21,60 Margaret Street,SYDNEY NSW 2000

OPI DATE 29/11/96 APPLN. ID 54485/96
AOJP DATE 23/01/97 PCT NUMBER PCT/US96/04901

AU9654485

(PCT)

(51) International Patent Classification 6 :
B26B 21/40

A1

(11) International Publication Number: WO 96/35558

(43) International Publication Date: 14 November 1996 (14.11.96)

(21) International Application Number: PCT/US96/04901

(22) International Filing Date: 10 April 1996 (10.04.96)

(30) Priority Data:
08/439,058 8 May 1995 (08.05.95) US

(71) Applicant: WARNER-LAMBERT COMPANY [US/US]; 201 Tabor Road, Morris Plains, NJ 07950 (US).

(72) Inventors: ORTIZ, Ernest, Albert; 43 Far Horizon Drive, Cheshire, CT 46410 (US). CHEN, Evan, Nai-Keung; 879 Riverside Drive, Fairfield, CT 06430 (US).

(74) Agents: RYAN, M., Andrea; Warner-Lambert Company, 201 Tabor Road, Morris Plains, NJ 07950 (US) et al.

(81) Designated States: AU, BR, CA, CN, JP, KR, MX, Eurasian patent (AM, AZ, BY, KG, KZ, MD, RU, TJ, TM), European patent (AT, BE, CH, DE, DK, ES, FI, FR, GB, GR, IE, IT, LU, MC, NL, PT, SE).

Published
With international search report.

(54) Title: SHAVING IMPLEMENT

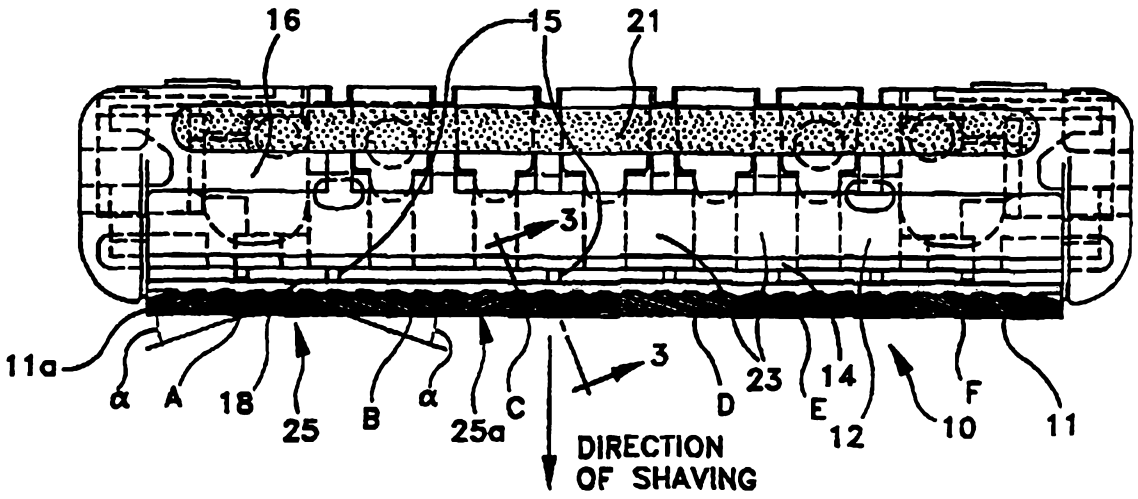

(57) Abstract

A shaving implement, such as a disposable cartridge (10) or razor, comprises a shaving head which includes a skin-contacting element (25), in the form of a plurality of sections of flexible ridges (11). The ridges in each section are oriented alternately at positive and negative angles relative to the blade, in a herringbone pattern, and define flow-through recesses. Preferably, a ridge from each section is joined together with a ridge from an adjoining section, to form a chevron-shaped node between sections. When shaving, adjacent sections push areas of the skin in different directions, while the flow-through channels retain a layer of lubricating material on the skin, so that the cartridge provides a smooth, comfortable shave.

SHAVING IMPLEMENT

Field of the Invention

The present invention is directed to wet shaving systems, and in particular to shaving implements, such as disposable razors or cartridges, having one or more razor blade cutting edges disposed between a guard and a cap.

Background of the Invention

In conventional wet shaving systems, a razor includes a handle and a shaving head. The shaving head, which may be either unitary with the handle or a separate, replaceable cartridge, houses one or more razor blades and includes a guard and cap on opposite sides of the blade cutting edge so as to maintain the blade edge at a predetermined spacing and angle relative to the skin.

The guard is disposed below the blade, forward of the blade cutting edge, to engage the skin prior to the blade. In addition to defining the shaving geometry as described above, the guard acts to pre-stretch the skin by a predetermined amount, so as to allow the blade to shave the skin closely and safely.

Normally, the skin-engaging surface of the guard is textured in some manner, for example to employ horizontal fins or ribs, such as disclosed in U.S. patent No. 3,939,560. Because the guard is normally part of the

razor head or cartridge, the projections are metal or a hard plastic.

There have, however, been proposals to provide a guard which is a separate element from the shaving head, in order that the guard may be formed of an elastomeric material. For example, U.S. patent No. 2,548,959 discloses a metal razor having a guard elements made out of rubber. The rubber guard elements are either mechanically attached to the head or glued to the metal guard.

There is currently on the market a razor cartridge which includes a resilient guard element in the form of a plurality of rows of flexible fins that extend parallel to the blade edge, as disclosed in U.S. patents No. 5,191,712 and No. 5,249,361. In the cartridge disclosed in the '361 patent, in order to attach the resilient guard element to the plastic cartridge body, the guard is formed of two parts, namely, a skin-engaging portion formed of elastomeric material and a base portion of rigid plastic material. The rigid plastic base portion is provided with latch members so that the guard assembly can be snapped onto a blade cartridge body.

It would be desirable to provide a shaving implement having a guard with a surface formed of flexible skin-engaging members to pre-stretch the skin prior to being shaved by the razor blade, which provides a very stable structure that can be mass produced in an economical and high quality manufacturing process, and which minimizes

parts handling, feeding, and subassembly requirements normally required for a cartridge.

It would also be desirable to provide an array of skin-contacting members on the guard which pre-stretch the skin in an improved manner and deliver additional, previously undetected, consumer benefits related to close and comfortable shaving.

It is an object of the present invention to overcome or ameliorate at least one of the disadvantages of the prior art, or to provide a useful alternative.

Summary of the Invention

In a first aspect, the invention provides a shaving implement for moving in a normal shaving direction, said implement comprising:

at least one razor blade having a blade edge extending in a direction perpendicular to said shaving direction;

a shaving head which secures said at least one razor blade and includes a skin contacting element, said skin contacting element having:

leading and trailing edges parallel to said blade edge; and

a plurality of skin contacting formations arranged to define a plurality of flow through channels extending from said leading edge to said trailing edge.

Unless the context clearly requires otherwise, throughout the description and the claims, the words 'comprise', 'comprising', and the like are to be construed in an inclusive sense as opposed to an exclusive or exhaustive sense; that is to say, in the sense of "including, but not limited to".

Preferably, said shaving head is flexible in a direction perpendicular to said blade, and wherein said skin-contacting element extends continuously across said guard portion.

AUSTRALIAN PATENT OFFICE

In one preferred form said shaving head is made of a relatively rigid plastic material and secures said one razor blade and further includes a cap portion and a guard portion; wherein at least one of said guard and cap portions has a recess including a seat portion and a joint-forming portion;

said skin-contacting element being elastomeric and filling said recess and joint-forming portion to form a mechanical joint with said at least one cap and guard portion wherein said skin-contacting element includes a skin engaging surface projecting from said recess.

The present invention, at least in a preferred embodiment, provides a shaving implement such as disposable razor or razor cartridge including a shaving head which includes a cap portion, a guard portion, and at least one razor blade. The shaving head preferably includes a skin-contacting element and is preferably formed of an elastomeric material which is insert molded into one or more recesses in the guard to extend across the shaving head.

The skin-contacting element preferably includes a plurality of skin-contacting formations extending at an angle relative to the direction of the blade edge, in order to define a plurality of flow-through channels extending from the leading edge to the trailing edge of the skin-contacting element. Most preferably, the skin-contacting element is in the form of a plurality of rows of ridges or projections, oriented alternately at positive and negative angles, in a herringbone pattern. Also, at least one ridge from each section is joined together with a ridge from an adjoining section, to form a chevron-shaped node between adjoining sections.

Due to the alternating angles of the ridges, different regions of the skin-contacting element push the skin in different directions, and the chevrons form stiffening nodes that

AUSTRALIAN PATENT OFFICE

reduce locally the flexibility of the ridges. Moreover, the fact that the ridges extend at an angle to the blade edge, and define flow-through channels, act to condition the skin surface, in preparation for the blade, in a novel way.

The preferred embodiment of the present invention employs the ridges which preferably have a lower aspect ratio and which are stiffer than the fins used in the product currently on the market. The inventors have found that, in contrast to the product presently being marketed, where the flexible fins are perpendicular to the shaving direction and act like wiper blades to remove shaving cream and other lubrication prior to the blade shaving the skin, the flow-through channels of the present invention leave a layer of lubricating material on the skin. Moreover, different areas of the skin-contacting element push the skin in different directions, and the invention provides a pleasant and comfortable shave.

The present invention, at least in a preferred embodiment, has additional advantages when used in flexible razor cartridges. Such cartridges have a cartridge body which is flexible in a direction perpendicular to the blade, so that the blade can conform to the various contours of the face or other shaving surface. If a skin-contacting element having fins parallel to the blade edge were to be used in a flexible cartridge, the fins would act as stiffening ribs against flexing of the cartridge, thus interfering with its normal operation. In contrast, because the formations in the present invention do not extend continuously across the guard, but rather define flow-through channels, the skin-contacting element of the present invention is quite flexible in the normal flexing direction of the cartridge.

AUSTRALIAN PATENT OFFICE

The recess in the guard for receiving the skin-contacting element may include, in addition to a seat portion, a joint forming portion for forming a mechanical joint, e.g., in a dovetail shape between the skin-contacting element and the guard. The skin-contacting element is insert molded onto the guard portion so as to fill the recess, such that the portion disposed in the dovetail portion forms a dovetail joint to help secure the skin-contacting element in place.

The guard supporting the skin-contacting element is preferably a plurality of guard segments, arranged parallel to the seat blade edge and having gaps therebetween. Each guard segment is supported by a rib that extends forwardly from a respective rigid seat segment, and is provided with a recess for securing the skin-contacting element.

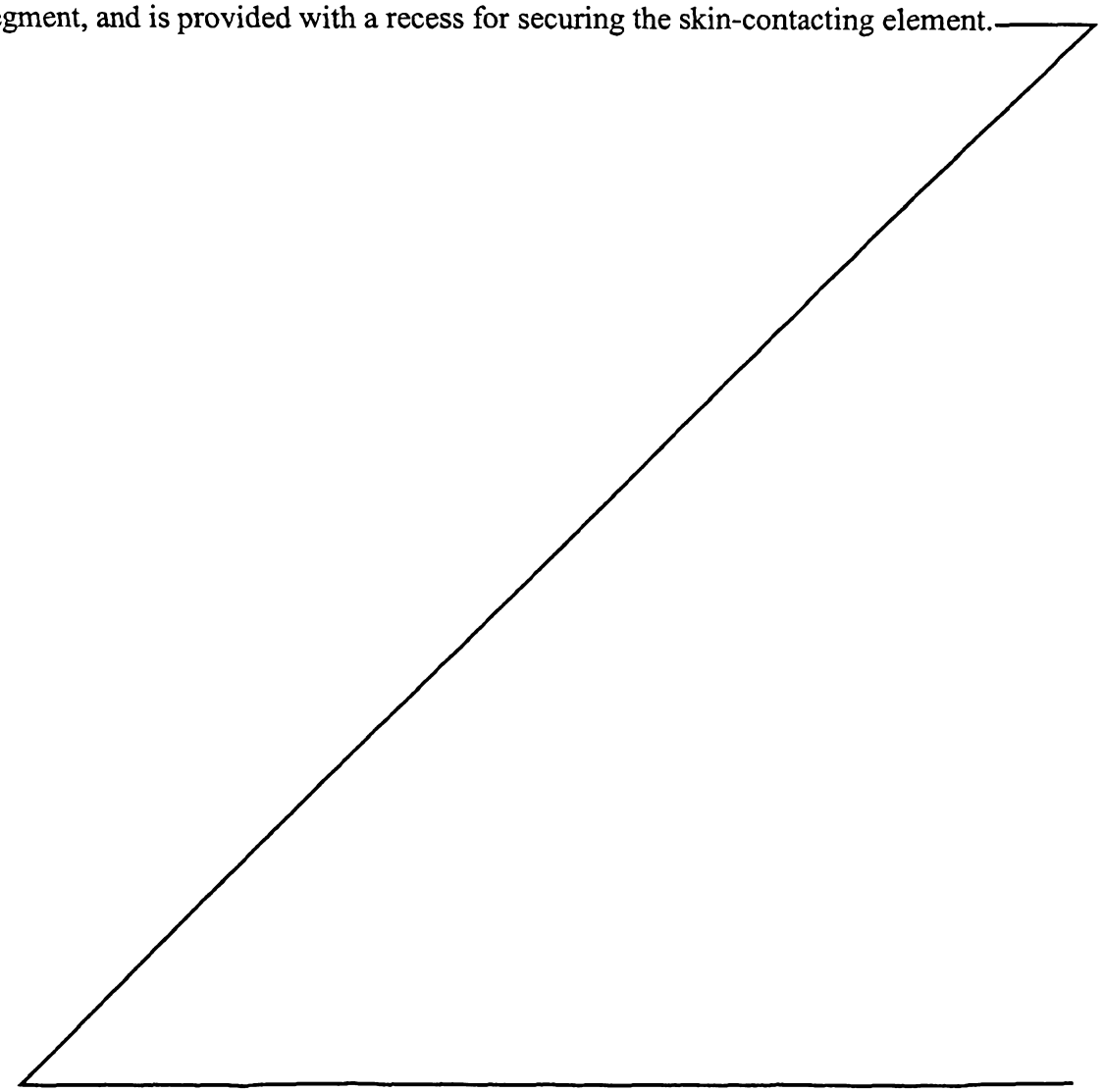

AUSTRALIAN PATENT OFFICE

The skin-contacting element may comprise a plurality of segments secured to individual guard segments. However, as discussed above where the skin-contacting element is elastomeric, it is very flexible due to the the flow-through channels, and therefore the skin-contacting element may advantageously extend continuously across the shaving head as a continous element. A skin-contacting element may be secured to the cap as well, either as an alternative to a skin-contacting element on the guard or in addition thereto.

For a better understanding of the invention, reference is made to the following detailed description of preferred embodiments, taken in conjunction with the drawings accompanying the application.

Brief Description of the Drawings

Figs. 1 and 2 are top and front views, respectively, of a flexible razor cartridge according to the invention;

Figs. 1a and 2a are enlarged top and front views, respectively, of a portion of the cartridge of Figs. 1-2;

Fig. 3 is an enlarged, sectional view of the skin-contacting element of Figs. 1-2, taken through lines 3-3 of Fig. 1;

Fig. 4 is an enlarged, sectional view of the cartridge of Figs. 1-2, taken through lines 4-4 of Fig. 2;

Fig. 5 is an enlarged, front view of a portion of a second embodiment of a flexible razor cartridge;

Fig. 6 is a side, sectional view of the cartridge, taken through lines 6-6 of Fig. 5;

Fig. 6a is a partial view of the cartridge of Fig. 6, prior to securing the skin-contacting element;

Fig. 7 is an enlarged, front view of a portion of a razor cartridge, illustrating a third embodiment of the invention;

Fig. 8 is an enlarged, front view of a portion of a razor cartridge, illustrating a fourth embodiment of the invention;

Fig. 9 is an enlarged, front view of a portion of a razor cartridge, illustrating a fifth embodiment of the invention;

Fig. 10 is an enlarged, front view of a portion of a razor cartridge, illustrating a sixth embodiment of the invention;

Fig. 10a is a sectional view, taken through lines 10a-10a of Fig. 10, of a slightly varied embodiment of Fig. 10;

Fig. 10b is a perspective view of a portion of the skin-contacting member of Fig. 10a;

Fig. 11 is an enlarged, front view of a portion of a razor cartridge, illustrating a seventh embodiment of the invention;

Fig. 12 is an enlarged, front view of a portion of a razor cartridge, illustrating an eighth embodiment of the invention;

Fig. 13 is a partial, top view of a razor cartridge containing a ninth embodiment of the invention; and

Fig. 14 is a top view of a razor cartridge containing an tenth embodiment of the invention.

Detailed Description Of Preferred Embodiments

Figs. 1-4 illustrate an insert molded, flexible razor cartridge 10 including a pair of single edge blades 12, 14, a cap 16, and a guard 18 which is supported forward of and below the blades 12, 14 by a plurality of ribs 15. The lower blade 14, or "seat blade", is supported on a seat 20 (see Fig. 4), whereas the upper blade 12, or "cap blade", is spaced above the seat blade 14 by a plurality of spacer elements 22. The cap is preferably molded as a plurality of segments, having gaps therebetween, to facilitate flexing of the cartridge 10, and includes a shaving aid 21, described further below.

In the example of the flexible cartridge shown in Figs. 1-4, the seat 20 is formed by a plurality of rigid segments 23, which are connected by flexible webs 28 to

allow the cartridge 10 to bend in a direction perpendicular to the longitudinal axis of the blades 12, 14. Examples of razor systems which employ a flexible blade cartridge are disclosed in Cartwright et al. U.S. patent No. Re. 30,913, Motta et al. U.S. patent No. 4,443,939, and Butlin et al. U.S. patent No. 5,141,694, and need not be described further here. Such razor systems allow the blade to follow the contours of the skin when shaving the face and provide a better shave.

The guard 18 includes a skin-contacting element 11 which includes a base 27 (see Fig. 4) and a plurality of rows of ridges 11a (see Fig. 3). The guard 18 includes a recess 29 for receiving the base 27 so that the ridges 11a project from the guard 18 and form a skin-contacting surface. The ridges 11a are arranged in a herringbone pattern and thus are divided into a plurality of adjacent segments A-F in which the ridges 11a extend alternately in directions α and α' relative to the direction parallel to the blades, in which angle α is a positive, acute angle and α' is a negative, acute angle relative to the direction of the blade edge.

Preferably, adjoining segments AB, BC, CD, DE, and EF are mirror images of one another and include a chevron-shaped node 25, 25a at each pair of adjoining sections, which nodes 25, 25a are oriented alternately in and opposite to the direction of shaving. In the preferred embodiment, the ridges 11a lie alternately at positive and

negative angles in the range of 10° to 50°. Most preferably, the ridges 11a in adjoining sections lie alternately at angles of +20° and -20° relative to the directions of the blade edges.

As shown in Fig. 1a, the ridges 11a define a plurality of flow-through channels extending from the leading edge "LE" to the trailing edge "TE" of the skin-contacting member. As also shown in Fig. 1a, the space between adjacent guard segments 18a is filled with a portion of the skin-contacting element, which provides control of the flow of the skin ahead of the blade edges while improving the flexibility of the cartridge. The feature also helps secure the element in place.

The guard portion 30 includes an outermost guard surface 46 (see Fig. 4) lying generally along a tangent between the cap portion 16 and the resilient skin-contacting element 11. The guard surface 46 limits the degree to which the razor can be pressed into the skin, to protect the skin from cuts and nicks. However, if, as in the preferred embodiment, nodes 25, 25a are formed across the skin-contacting element, it is not necessary to provide a guard surface 46, because the non-yielding nodes 25, 25a will perform the protective function.

Preferably, the skin-contacting element 11 is formed of an elastomeric material which will chemically bond with the surfaces forming the recess 29 in the guard 18. In the guard 18 shown in Fig. 4, the recess 29 is

partially inset into the guard 18 so as to have three surfaces (opposed horizontal top ledge 36a and bottom ledge 36, and vertical back wall 37) to secure the base 27 of the skin-contacting element 11. The preferred materials, where the guard 18 is made of polypropylene, is a thermoplastic rubber such as Hercuprene 1000, 3000 series, Durometer 30 to 90 A scale; Kraton G series, Durometer 30 to 90 A scale; and Santoprene 2271 series, Durometer 30 to 90 A scale. Most preferably, a thermoplastic rubber, having a durometer of 45 Shore A scale, is used.

In the exemplary embodiment of Figs. 1-4, the ridges 11a have a height "h" of 0.025 inches (0.635 mm) and a pitch "p" of 0.020 inches (0.51 mm). The ridges 11a taper from a thickness "b" of 0.015 inches (0.38 mm) at the base to a the thickness "t" at the tip of 0.005 inches (0.13 mm), and there is a spacing "s" of 0.005 inches (0.13 mm) between rows. The height, taper and spacing may be varied depending upon the resiliency of the material used. However, preferably the ridges have a height "h" between 0.56 and 0.71 mm, an aspect ratio (ratio of height "h" to base thickness "b") between 1.5 and 1.9, and a pitch "p" between 0.254 and 0.51 mm.

Due to the herringbone ridge pattern, when the razor moves in the direction of shaving, the segments A-F of the skin-contacting element 11, rather than flexing in the opposite direction of shaving (as would occur if the rows were parallel to the direction of the blade edges),

will flex at angles of 70° and 290°, respectively, relative to the direction of shaving. Moreover, at the chevron-shape nodes 25, 25a, flexure does not occur. As can be seen from Fig. 1, the chevrons form alternating "Λ" (25) and "V" (25a) nodes between adjoining rib segments. When the node "V" 25a is pointing in the direction of shaving, the "V" intersection 25a acts like a snowplow and spreads the skin apart, thereby stretching the skin. Alternatively, when the node "Λ" 25 is pointing away from the direction of shaving, the "Λ" shape tends to bunch the skin together. The applicants have found that this alternating stretching and bunching of areas of the skin, prior to encountering the blades 12, 14, tends to produce better performance and a closer shave.

In accordance with generally known insert molding processes, the blades 12, 14 are positioned in a cartridge forming mold, and liquid plastic, preferably polypropylene, is injected to form seat 20, cap 16, spacers 22, and guard 18 and, in so doing, secure the blades 12, 14 as shown. The guard 18 is molded so as to form the recess 29 extending across the front surface of guard 18, including a horizontal ledge 36, a vertically extending rear wall 37, and a top ledge 36a, such that the recess 29 is partially inset into the guard 18 as shown in Fig. 4. Insert molding to form razor cartridges *per se* is generally known and therefore need not be described in detail here. For an example of a suitable insert molding process, see U.S.

patent No. 5,141,694. After the cartridge unit has been thus molded, the skin-contacting element 11 is insert molded so as to fill the recess 29.

The flexible cartridge shown in the embodiment of Figs. 5-6 is similar to the embodiment of Figs. 1-4, except that the guard 18 comprises a plurality of individual guard segments 30, each supported by a forwardly extending rib 34, instead of a single guard element, and the recess for securing the skin-contacting element to each guard segment is shaped so as to form a dovetail mechanical joint. Also, Figs. 5-6 illustrate an alternative embodiment of the skin-contacting element.

As shown in Fig. 6a, each guard segment 30 includes a forward facing recess 35. The recess 35 includes a seat portion, formed a by horizontal ledge 36 and a vertically extending rear wall 37 at the rear of the ledge, and the ledge 36 extends rearwardly from the front face 39 of the guard segment 30, similar to Figs. 1-4. The recess 35 further includes, however, a joint-forming portion 38, in the shape of a dovetail, located below the seat portion.

A skin-contacting element segment 19 is injection molded so as to fill the seat and joint-forming portions of the recess 35 of each guard segment 30. Each skin-contacting element segment 19 has a skin contacting surface that is disposed forward of and below the cutting edge of the seat blade 14. The portion of the skin-contacting

element segment 19 filling the joint-forming recess 38 forms a dovetail joint.

The embodiment of Figs. 5-6 may be formed in a manner similar to Figs. 1-4 except that, in addition to the main body of the skin-contacting segment (which is supported in the seat portion of the recess), a dovetail shaped extension is disposed in joint-forming portion 38 to form the dovetail joint 38.

In the example of Figs. 5-6, the skin-contacting element 19 includes a plurality of ridges 44, which are similar to the ridges of Figs. 1-4 except that they project forward, parallel to the blades, rather that being oriented upwardly as in Figs. 1-4. Each row of ridges 44 extends outward a greater distance than the row immediately above it. Rather than extending parallel to the blades, the ridges can be inclined at angle to the horizontal.

Fig. 7 illustrates a third embodiment, which is similar to Figs. 5-6 except that the skin-contacting element 19' extends continuously across the width of the cartridge. The skin-contacting element 19' is insert molded onto the guard segments. One embodiment may include the guard segment 30, so as to be disposed in the recess 35 and form a dovetail joint with each guard segment 30. in the skin-contacting element 19' as shown, the ridges project forward, parallel to the blades. However, the ridges may be oriented vertically, as in Figs. 1-4.

Fig. 8 illustrates a fourth embodiment in which the skin-contacting segments 19" include an array of formations at alternating angles forming small chevrons 44a that project forward of the cartridge. Preferably, each horizontal row of chevrons 44a projects outwardly a greater distance than the row above it. As in the prior embodiments, rather than facing forward the chevrons 44a can extend upwardly, perpendicular to the blades.

Fig. 9 illustrates a fifth embodiment, containing skin contacting elements 44b comprising a single row of formations, arranged in pairs to form chevron shaped nodes 19"', successive chevrons 19"' pointing in opposite directions. As in the prior embodiments, rather than facing forward the chevrons 19"' can extend upwardly, perpendicular to the blades.

Fig. 10 illustrates a sixth embodiment in which a plurality of vertically oriented formations 44c are spaced across each skin-contacting elements 19^{IV}. Again, the formations are shown projecting forward, but can alternatively face upwardly.

Fig. 10a illustrates a modification of Fig. 10, taken through lines 10a-10a of Fig. 10. The embodiment of Fig. 10a is the same as Fig. 10, except that the formations 44c' are vertically oriented rather than facing forward (as in Fig. 10). Fig 10b is a perspective view of the formations 4c' of Fig. 10a.

In the seventh embodiment, shown in Fig. 11, each skin-contacting segment 30 has a skin-contacting element segment 19^{V} with an outwardly projecting, elliptical bulge shaped formation 44d. The segments 19^{V} thus form a plurality of spaced skin contacting members across the width of the cartridge. In this embodiment too, the skin engaging elements, bludges 44d, can be oriented to face upwardly rather than forward.

AUSTRALIAN PATENT OFFICE

Fig. 12 illustrates an eighth embodiment where, in addition to skin-contacting segments 19 on the guard segments 30, a second skin-contacting element 50 is molded into the cap 16. As in the case of skin-contacting segments 19, the skin-contacting element has a plurality of rows of ridges 11a that are arranged in a pattern similar to the ridges 11a of Fig. 1, such that the ridges 11a define flow-through channels 17. The cap 16 is formed with a recess (not shown) to receive the base of the skin-contacting element 50, which may be similar to recess 29 of Fig. 4, or may include a joint portion such as recess 38 of Fig. 6a. Moreover, if desired a skin-contacting element 50 may be used in the cap 16 without skin-contacting elements 19, in which case a conventional guard would be employed.

Fig. 13 shows a skin-contacting element in the form of a plurality of ridges 11e, in which adjacent segments of ridges 11e are oriented at angles of +20° and -20°, respectively, relative to the direction of the edge of razor blade 14. Adjoining segments of ridges 11c meet to form a plurality of chevron-shape nodes. The ridges 11a may

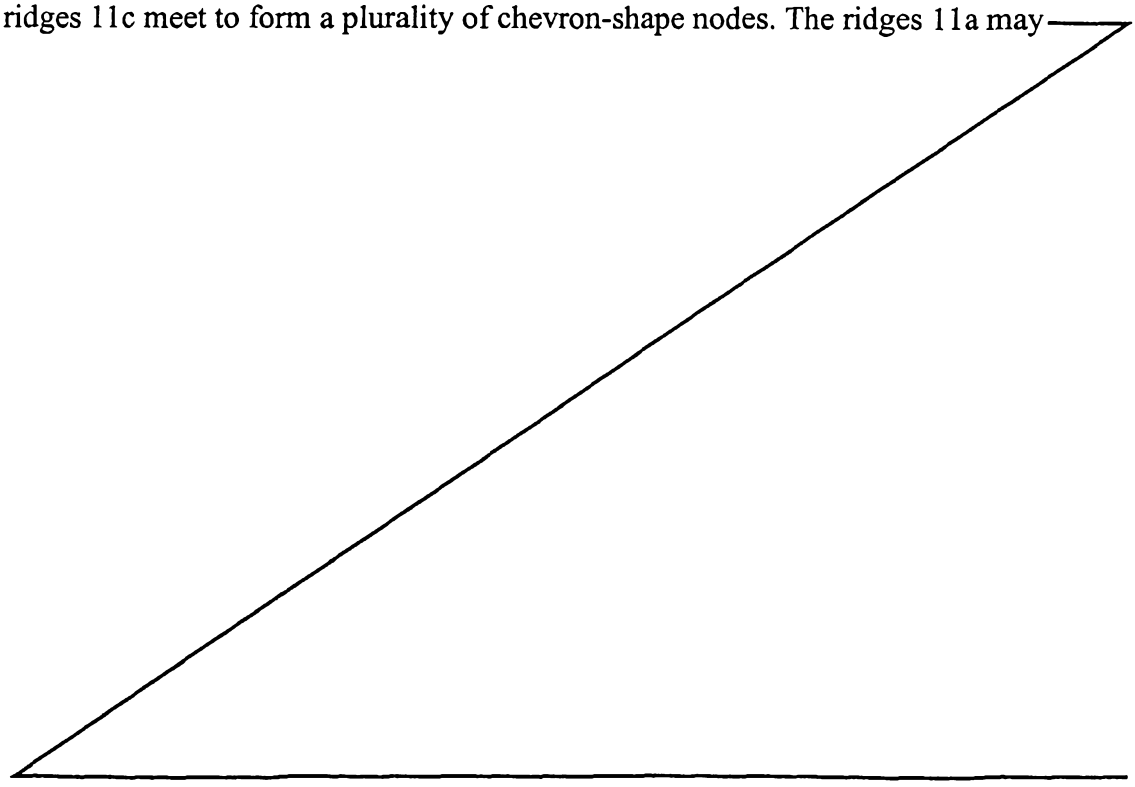

AUSTRALIAN PATENT OFFICE

have a thickness on the order of 0.010 inches (0.25 mm) and a spacing between rows of 0.005 inches (0.12 mm).

In Fig. 14, the rows of ridges 11b are similar, in cross-section, to the rows of ridges 11a in Figs. 1-4. However, unlike Figs. 1-4, where the ridges 11a are arranged in a herringbone pattern, in Fig. 15 the ridges 11b to the left of the centerline CL are parallel to one another, and extend in a direction $+\alpha$, whereas the ridges 11b to the right of the centerline CL extend in a direction $-\alpha$. A gap "g", e.g., of 0.020 inches (0.51 mm), located at the centerline CL, may separate the two sections of ridges 11b. Alternatively, the two sections of ridges 11b can meet at the centerline CL in a chevron configuration, similar to the adjoining segments A-F of Figs. 1-4.

As shown in the drawings, in each embodiment the ridges form a plurality of flow-through channels 17 across the guard (or cap). And, in each of the embodiments, the ridges lie alternately at positive and negative angles relative to the blade edge, although it is within the scope of the invention to form the ridges so that they all lie at a positive (or negative) angle, or at the same positive (or negative) angle.

As also shown in the Figure 4, preferably the cap 16 includes a recess 40 in which a shaving aid 21 is applied. As used herein, the term "shaving aid" refers equally to either a shave-aiding agent combined with a solid, water-soluble micro-encapsulating or micro-porous

structure which retains the agent, or to that agent itself being a water-soluble solid.

Exemplary materials constituting shaving aid 21 may comprise one or various combinations of the following:

A. A lubricating agent for reducing the frictional forces between the razor and the skin, e.g., a micro-encapsulated silicone oil.

B. An agent which reduces the drag between the razor parts and the shaver's face, e.g., a polyethylene oxide in the range of molecular weights between 100,000 and 6,000,000; a non-ionic polyacrylamide; and/or a natural polysaccharide derived from plant materials such as "guar gum".

C. An agent which modifies the chemical structure of the hair to allow the razor blade to pass through the whiskers very easily, e.g., a depilatory agent is one example.

D. A cleaning agent which allows the whisker and skin debris to be washed more easily from the razor parts during shaving, e.g., a silicon polyethylene oxide block copolymer and detergent such as sodium larnyl sulphate.

E. A medicinal agent for killing bacteria, or repairing skin damage and abrasions.

F. A cosmetic agent for softening, smoothing, conditioning or improving the skin.

G. A blood coagulant for the suppression of bleeding that occurs from nicks and cuts.

H. Essential oils.

I. Vitamin E, e.g. in a formulation of vitamin E acetate, sodium pyruvate, and sunflower oil, contained on a polytrap bead carrier.

The configuration of shaving aid, its place of application to the razor cartridge, the manner of attachment and/or other means and method of incorporation may vary widely to fit particular requirements.

Microencapsulation has been developed to the extent that it may be used to controllably release a large variety of agents including various oils such as silicone oil. Additional information concerning the technology of microencapsulation may be obtained from "Microencapsulation", pages 420-437 in "The Theory & Practice of Industrial Pharmacy", Second Edition, 1970, 1976, published by Lea & Febiger, which is incorporated herein by reference. Further, publication by Union Carbide Corporation of May 1977, entitled "Polyox, Water Soluble Resins: Forming Association Compounds" teaches, at page 11, the use of polyethylene oxide for microencapsulating water-immiscible oils and, at page 17, the use of gelatin and polyethylene oxide to form soluble films for microencapsulation applications, also incorporated by reference.

Another Union Carbide Corporation publication of May 1972, entitled "Polyox, Water Soluble Resins: Thermoplastic Processing: Calendering, Extrusion, and

Injection Molding", discloses a basic process for injection molding items using polyethylene oxide. That publication also describes the formation of calendered films and sheets of polyethylene.

U.S. Pat. Nos. 3,075,033 and 3,181,973 provide examples of ways in which polyethylene oxide may be mixed with an insoluble thermoplastic (such as polystyrene of which cap 22 and seat 12 herein are often made) and then formed into a plasticized mass. The polyethylene oxide is then released from the mass by the application of water.

The aforementioned "The Theory & Practice of Industrial Pharmacy", in Chapters 10 and 11 entitled "Compaction & Compression" and "Tablets", respectively, pages 296-358, discloses a variety of compression and/or compaction techniques which, with binders, may be used to form tablets or bars of a large variety of materials.

The foregoing discloses techniques by which shave-aiding agents, such as silicone oil, may be microencapsulated in water soluble capsules. Such microcapsules may then be mixed with a cement or binder and adhered to an appropriate surface of razor cartridge. Also disclosed are various techniques by which polyethylene oxide may be formed in a matrix with other materials, such as polystyrene, or formed into sheets or strips which may be adhered to an appropriate surface of razor cartridge.

These embodiments of the invention have been selected only to exemplify basic approaches to applying the

shaving aid either in rod, strip or particle form. As it will become apparent, the shaving aid may be attached to an outer surface of a razor cartridge, recessed into the cartridge, formed as an integral part of one or more of the basic cartridge components (e.g. its guard bar or a spacer between blades in a twin-blade cartridge) and/or impregnated or dispersed in the material from which one or more of the blade-supporting cartridge components are molded or otherwise formed.

Example

Samples of a razor cartridge according to the invention were made and compared against the razor cartridge currently being marketed, which is disclosed in U.S. patents No. 5,191,712 and No. 5,249,361 (hereafter, "existing product").

The invention sample was a flexible cartridge, as shown in Figs. 1-4. The skin-contacting element was formed of thermoplastic rubber having a durometer of 45 Shore A. The ridges 11a had a height "h" of 0.025 inches (0.635 mm) and a pitch "p" of 0.020 inches (0.51 mm). The ridges 11a tapered from a thickness "b" of 0.015 inches (0.38 mm) at the base to a the thickness "t" at the tip of 0.005 inches (0.13 mm), and had a spacing "s" of 0.005 inches (0.13 mm) between rows. The skin-contacting element had six sections A-F, as shown in Fig. 1, with a chevron 25, 25a at each

adjoining section, pointing alternately in opposite directions as shown in Fig. 1a. The invention sample and the existing product both had a shaving aid (lubricating strip) in the cap.

The invention sample and existing product were first compared in a dry friction test, in which each razor cartridge rested on its rubber skin-contacting element at a normal shaving angle. The invention sample had approximately 30% greater friction than the existing product, indicating that the rubber used in the invention sample has a higher coefficient of friction than the rubber used in the existing product.

Based upon the dry friction test, it would thus be expected that the invention sample would similarly exhibit greater friction in a wet friction test. In the wet friction test, a layer of shaving cream was applied to the test surface, and the relative resistance to movement of the two samples was observed. Rather than having higher friction than the existing product, the invention sample was surprisingly found to move across the surface with considerably less resistance than the existing product.

The applicants believe that such results are due to the fact that the fins of the existing product, which are relatively flexible and extend continuously across the guard, act like a wiper blade or squeegee, wiping off the shaving cream and lubricant from the shaving surface. As a result, the blades and cap move across a surface in which a

substantial portion of the lubricants have been removed. In contrast, the invention sample has flow-through channels that leave more of a lubricating film on the face.

The foregoing represents a description of the preferred embodiments. Variations and modifications will be apparent to persons skilled in the art, without departing from the inventive concepts shown herein. For example, while an embodiment of an insert molded cartridge has been described, it is possible to make a cartridge of similar configuration by other techniques. For example, the cap may be formed as a separate element from the seat 20 and guard portion 30, and subsequently assembled around the blade, in the manner described in Motta et al. U.S. patent No. 4,443,939. Also, while an example is given of a twin blade cartridge, the shaving cartridge may include only a single blade, more than two blades, or one or more double edge blades. Further, while examples have been given of flexible blade cartridges, the invention may be employed with non-flexible cartridges. Also, the shaving head, rather than being a disposable cartridge, may be integral with a razor handle, such as in the case of disposable plastic razors or injection razors. All such modifications and variations are intended to be within the scope of the invention, as defined in the following claims.

THE CLAIMS DEFINING THE INVENTION ARE AS FOLLOWS:-

1. A shaving implement for moving in a normal shaving direction, said implement comprising:

at least one razor blade having a blade edge extending in a direction perpendicular to said shaving direction;

a shaving head which secures said at least one razor blade and includes a skin contacting element, said skin contacting element having:

leading and trailing edges parallel to said blade edge; and

a plurality of skin contacting formations arranged to define a plurality of flow through channels extending from said leading edge to said trailing edge.

2. A shaving implement according to claim 1, wherein said skin-contacting formations extend at an angle relative to the direction of said blade edge.

3. A shaving implement according to claim 1 or claim 2, wherein said formations are made of a flexible material.

4. A shaving implement according to any one of claims 1 to 3 wherein said skin-contacting element includes a plurality of adjoining sections, and wherein formations in adjoining sections extend alternately at positive and negative angles relative to the direction of said blade edge.

5. A shaving implement according to claim 4 wherein at least one formation from each section is joined together with a formation from an adjoining section, to form a chevron-shaped node between adjoining sections.

6. A shaving implement according to claim 1 wherein said skin-contacting element includes a plurality of adjoining sections, each section comprising a plurality of rows of

AUSTRALIAN PATENT OFFICE

parallel, flexible formations, and wherein formations in adjoining sections extend alternately at positive and negative angles relative to the direction of said blade edge.

7. A shaving implement according to claim 6 wherein at least one formation from each section is joined together with a formation from an adjoining section, to form a chevron-shaped node between adjoining sections, the chevron shaped nodes in successive adjoining sections across the skin-contacting element being oriented alternately in opposite directions.

8. A shaving implement according to claim 7 wherein adjoining sections are a mirror image of one another.

9. A shaving implement according to claim 8 wherein said formations have a skin contacting surface such that different segments push the skin in different directions when shaving.

10. A shaving implement according to claim 6, wherein said formations have a height "h", and wherein rows in each section have different heights.

11. A shaving implement according to claim 6, wherein the alternating positive and negative angle of said formations, relative to the direction of said blade edge, is in the range of 10° to 50°.

12. A shaving implement according to claim 11 wherein the values of the alternating positive and negative angles are the same.

13. A shaving implement according to claim 11 wherein formations in adjoining sections lie alternately at angles of ±20°.

14. A shaving implement according to claim 1, further comprising a guard portion lying forward of said blade edge, said guard portion including said skin-contacting element.

AUSTRALIAN PATENT OFFICE

15. A shaving implement according to claim 14 wherein said skin-contacting element includes a base, and wherein said formations extend outwardly from said base at an angle generally perpendicular to said blade and to the direction of shaving.

16. A shaving implement according to claim 14 wherein said skin-contacting element includes a base, and wherein said formations extend outwardly from said base at an angle generally parallel to said blade, in the direction of shaving.

17. A shaving implement according to claim 14 wherein said shaving head is flexible in a direction perpendicular to said blade, and wherein said skin-contacting element extends continuously across said guard portion.

18. A shaving implement according to claim 14 wherein said guard portion includes a plurality of individual guard segments and wherein said skin-contacting element is in the form of a plurality of skin-contacting segments associated with the respective guard segments.

19. A shaving implement according to claim 1 wherein said formations have a height between 0.56 and 0.71 mm, an aspect ratio (height/base thickness) of between 1.5 and 1.9, and a pitch between 0.254 and 0.51 mm.

20. A shaving implement according to claim 19 wherein said formations are formed of a material having a durometer (Shore A scale) between 30 and 90.

21. A shaving implement according to claim 19 wherein said formations have a height of 0.635 mm and a pitch of 0.51 mm, taper from a base thickness of 0.38 mm to a thickness at the tip of 0.13 mm, and have a spacing of 0.013 mm between rows.

22. A shaving implement according to claim 21 wherein said formations are formed of a material having a durometer of approximately 45 Shore A scale.

AUSTRALIAN PATENT OFFICE

23. A shaving implement according to any one of the preceding claims wherein said shaving head further comprises a shaving aid for laying down a lubricating film when used for wet shaving.

24. A shaving implement according to claim 1 wherein said formations extend parallel to one another and substantially perpendicular to said blade edge.

25. A shaving implement according to any one of the preceding claims further comprising a guard portion lying forward of said blade edge, said guard portion including said skin-contacting element.

26. A shaving implement according to claim 1 wherein said shaving head is made of a relatively rigid plastic material and secures said one razor blade and further includes a cap portion and a guard portion; wherein at least one of said guard and cap portions has a recess including a seat portion and a joint-forming portion;

said skin-contacting element being elastomeric and filling said recess and joint-forming portion to form a mechanical joint with said at least one cap and guard portion wherein said skin-contacting element includes a skin engaging surface projecting from said recess.

28. A shaving implement according to claim 27 wherein said skin-contacting element is insert molded onto said guard portion, and is disposed forward of, and below, said blade edge.

29. A shaving implement according to claim 28 wherein said guard portion includes an outermost guard surface lying generally along a tangent between said cap portion and resilient skin-contacting element.

30. A shaving implement according to claim 27 wherein said joint-forming portion is dovetail shaped.

AUSTRALIAN PATENT OFFICE

31. A shaving implement according to claim 28 wherein said guard portion comprises a plurality of guard segments arranged parallel to said blade edge and having gaps therebetween; and wherein said skin-contacting element comprises a skin-contacting element segment associated with each guard segment.

32. A shaving implement according to claim 31 wherein each said guard segment includes a recess including a seat portion and a joint-forming portion, and wherein said skin-contacting segments are insert molded to fill said recess and form a joint with said joint-forming portion.

33. A shaving implement according to claim 32 wherein said joint-forming portion is dovetail shaped.

34. A shaving implement according to claim 27 wherein said skin engaging surface is defined by said kin contacting formations which extend forward of said guard portion and parallel to said blade edge.

35. A shaving implement according to claim 27 wherein said skin engaging surface comprises a plurality of flexible ribs extending perpendicular to said blade and parallel to said blade edge.

36. A shaving implement according to claim 27 wherein said skin engaging surface comprises an array of flexible formations.

37. A shaving implement according to claim 27 wherein said skin engaging surface comprises a plurality of flexible ribs oriented generally perpendicular to said blade edge.

38. A shaving implement according to claim 27 wherein said skin engaging surface comprises a plurality of elliptical bulges.

39. A shaving implement according to claim 27 wherein said skin-contacting element is disposed in said cap.

AUSTRALIAN PATENT OFFICE

40. A shaving implement according to claim 27 wherein said shaving head secures a pair of razor blades, and wherein said skin-contacting element is disposed between said blades.

41. A shaving implement for moving in a normal shaving direction substantially as herein described with reference to any one of the embodiments of the invention illustrated in the accompanying drawings.

DATED this 19th Day of March, 1999

WARNER-LAMBERT COMPANY

Attorney: CAROLINE M. BOMMER
Fellow Institute of Patent Attorneys of Australia
of BALDWIN SHELSTON WATERS

AUSTRALIAN PATENT OFFICE

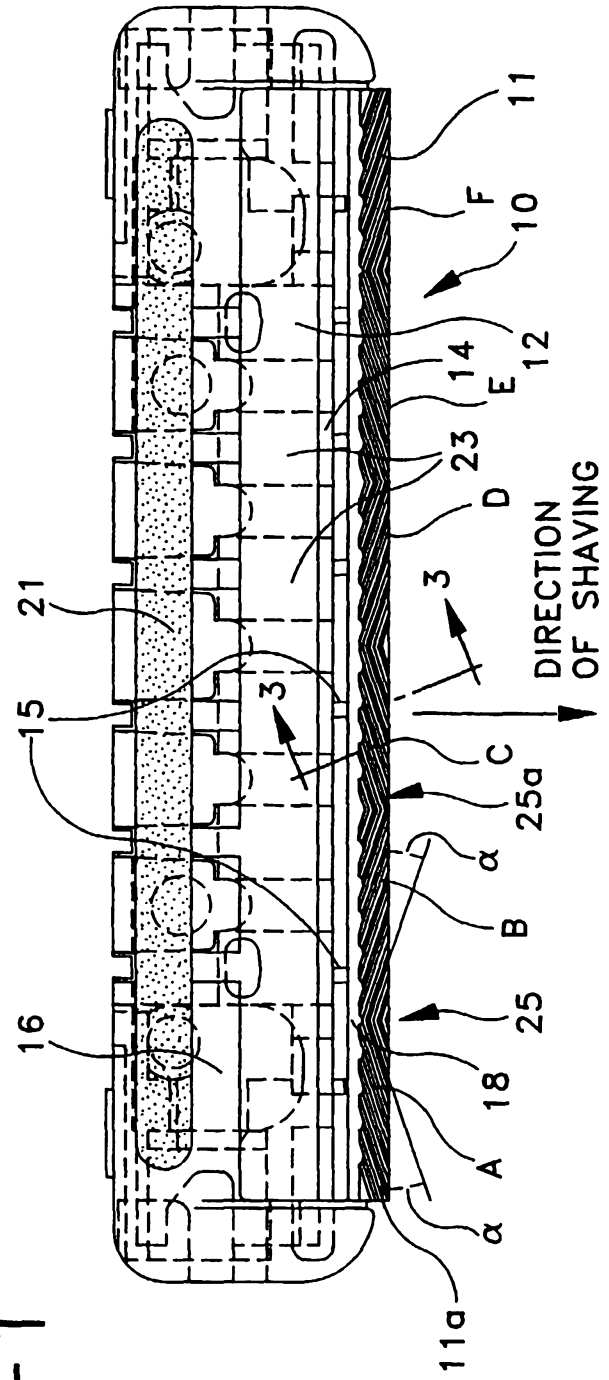
11
F
10
12
14
E
23
D
DIRECTION
OF SHAVING
3
21
3
15
C
25a
α
B
16
25
18
A
α
11a

FIG-1

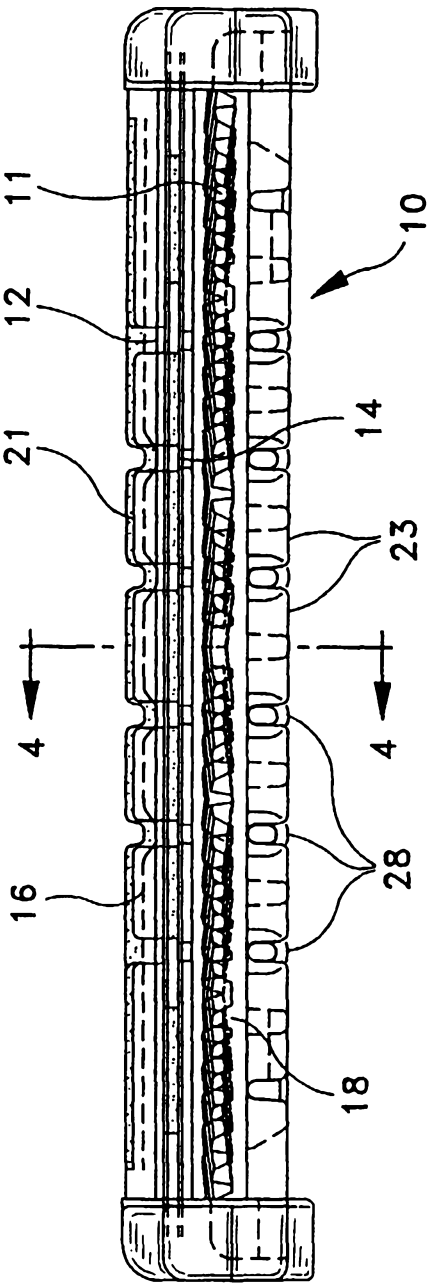
11
10
12
14
21
23
4
4
16
28
18

FIG-2

FIG-1a

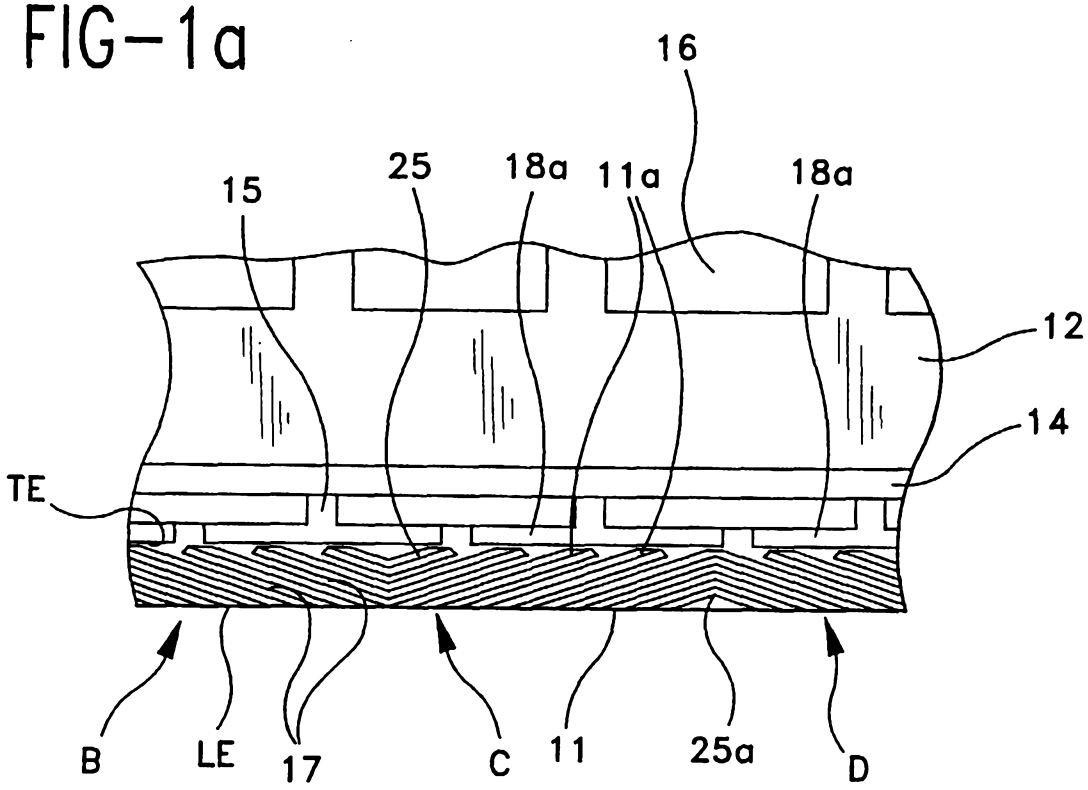
16
15
25
18a
11a
18a
12
14
TE
B
LE
17
C
11
25a
D

FIG-2a

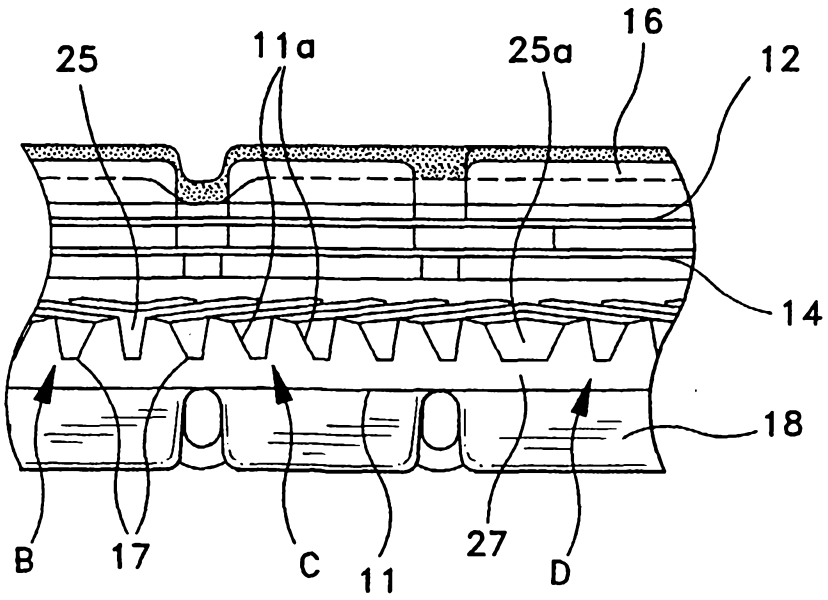
25
11a
25a
16
12
14
18
B
17
C
11
27
D

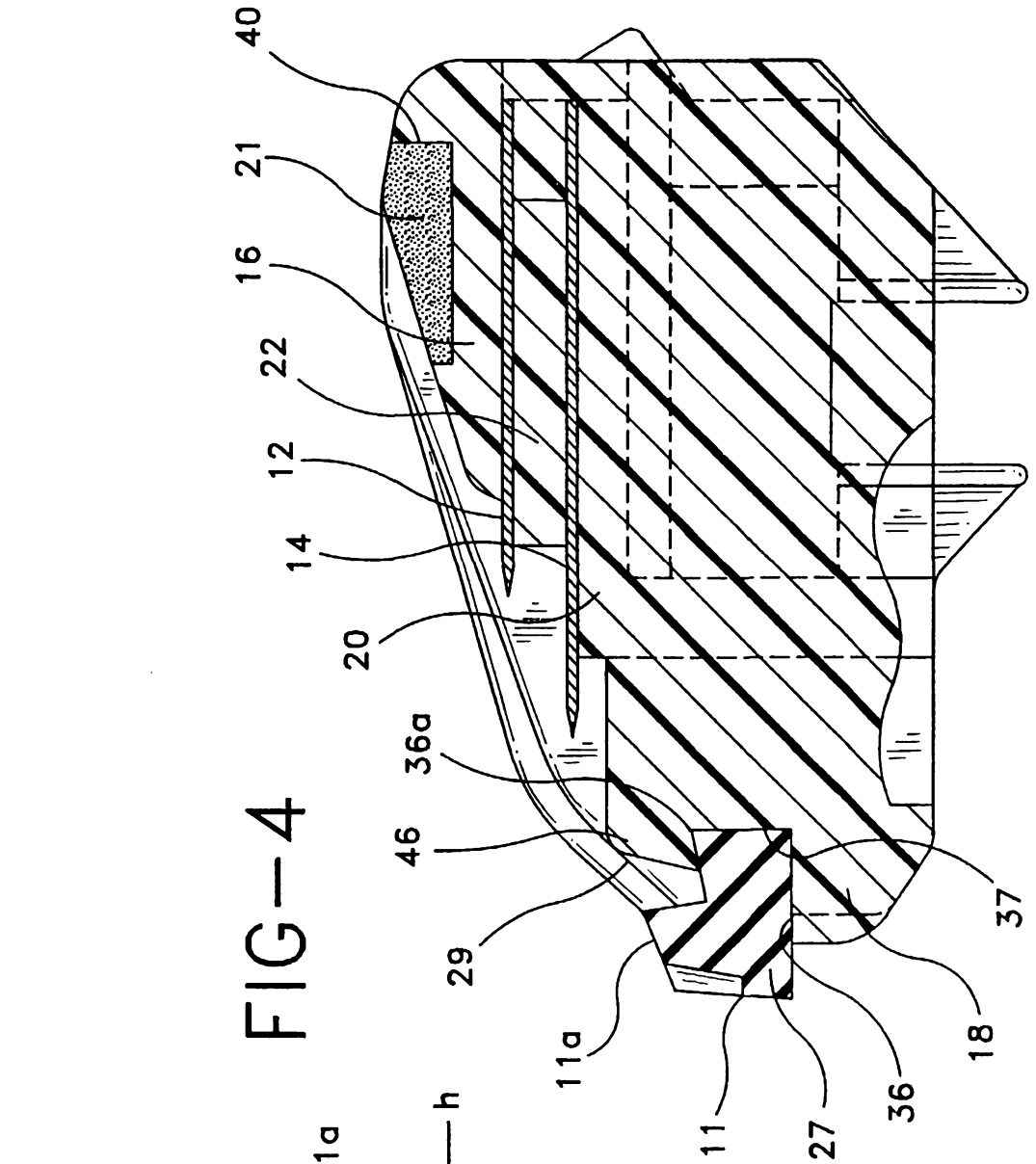

FIG-4

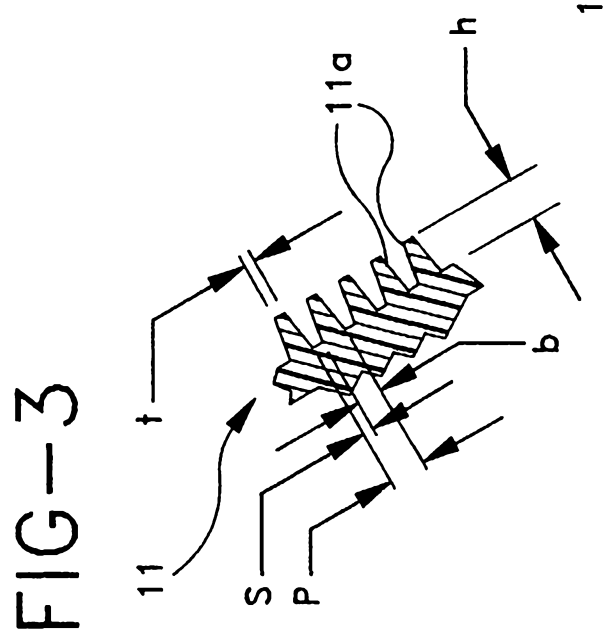

FIG-3

FIG-5

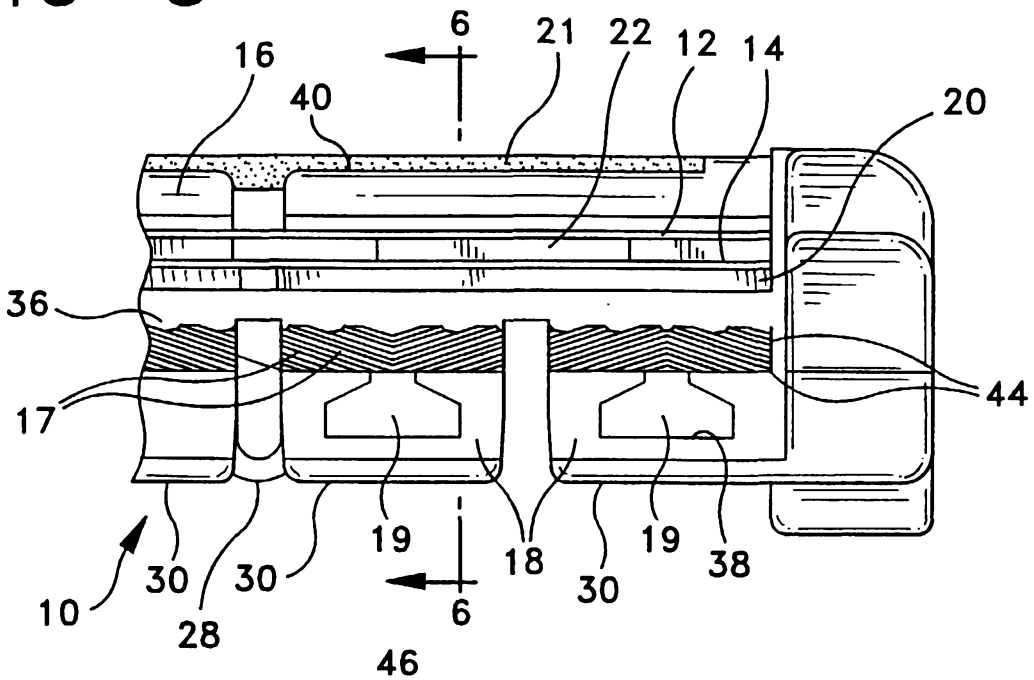

FIG-6a

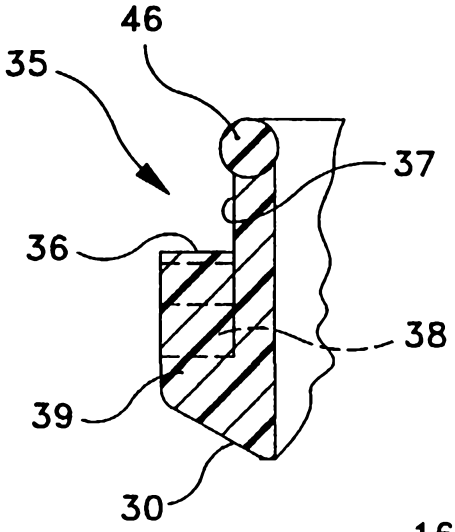

FIG-6

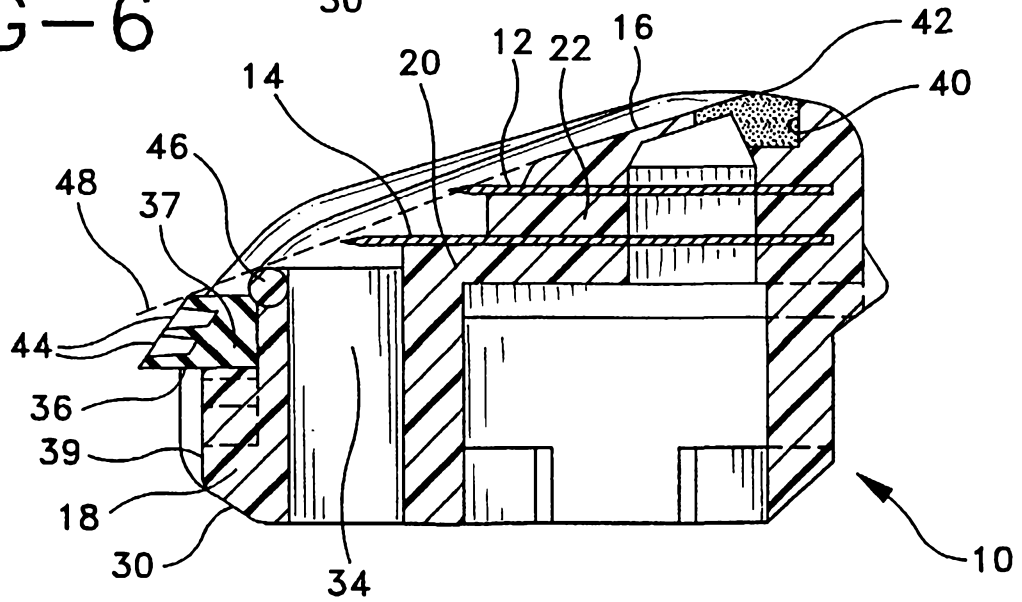

FIG-7

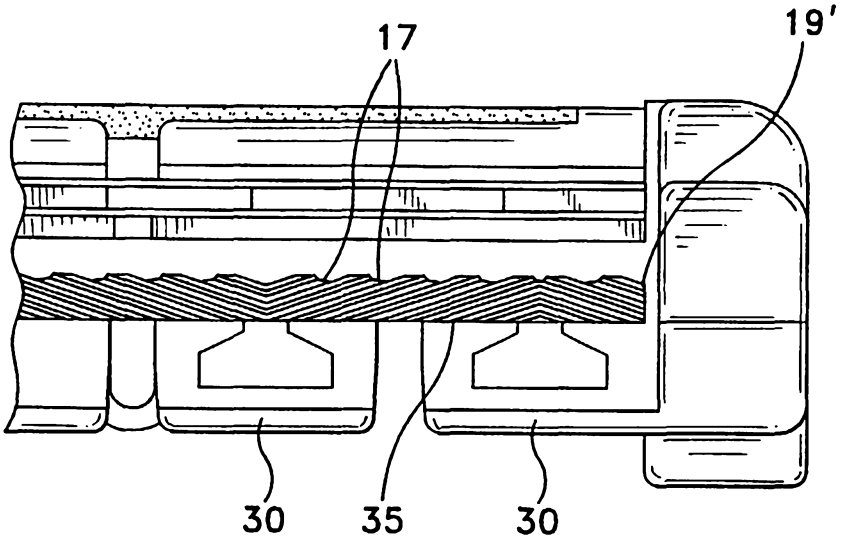

FIG-8

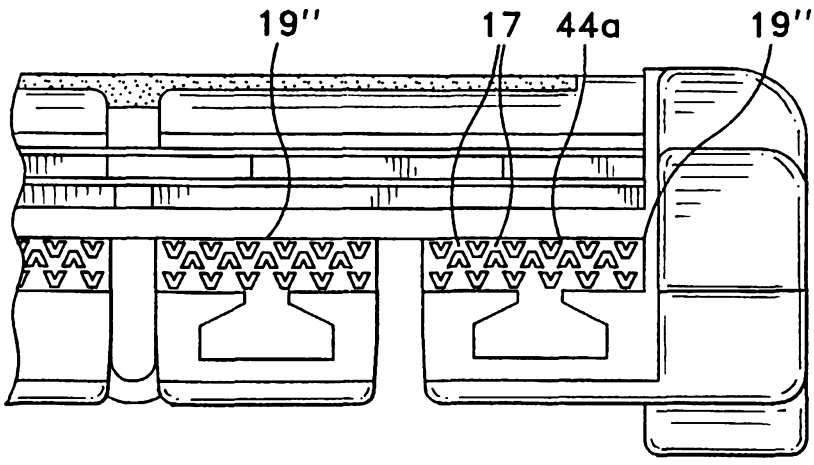

FIG-9

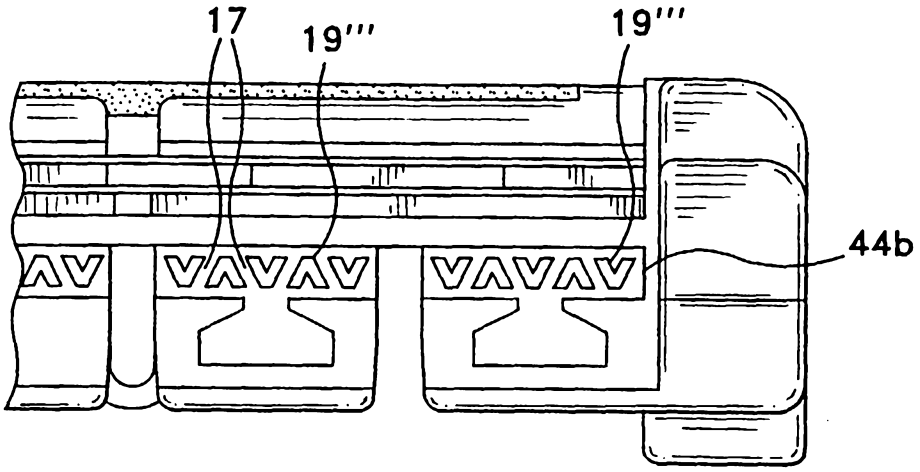

FIG-10

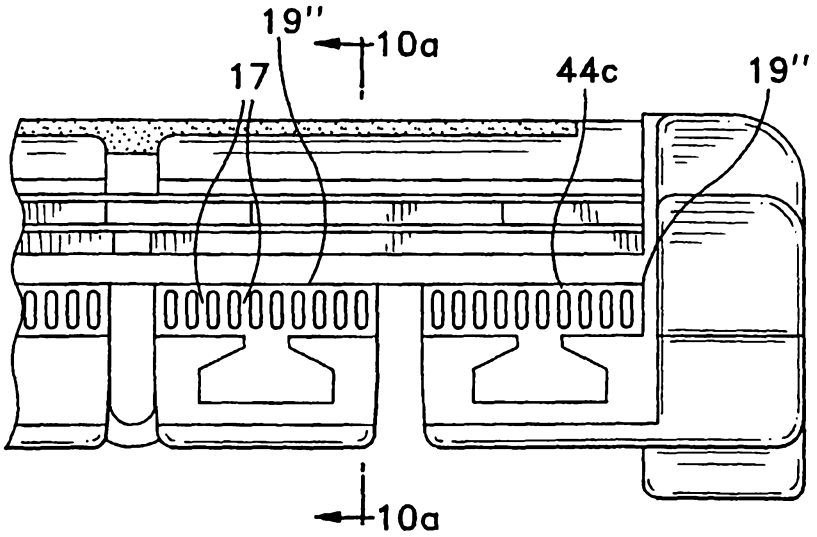

FIG-10a

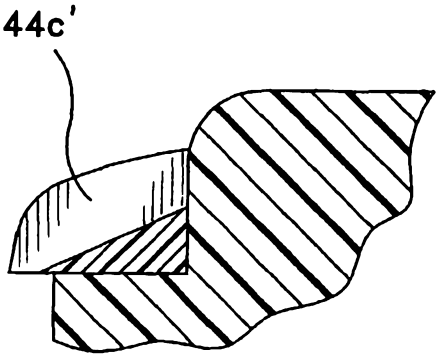

FIG-10b

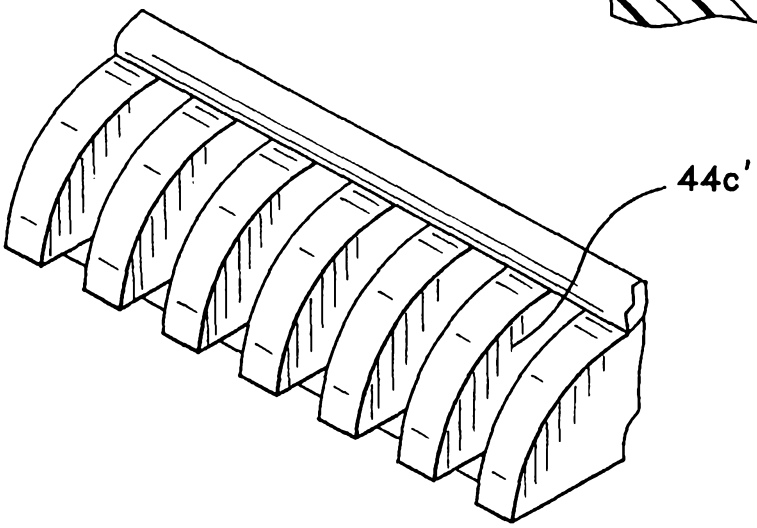

FIG-11

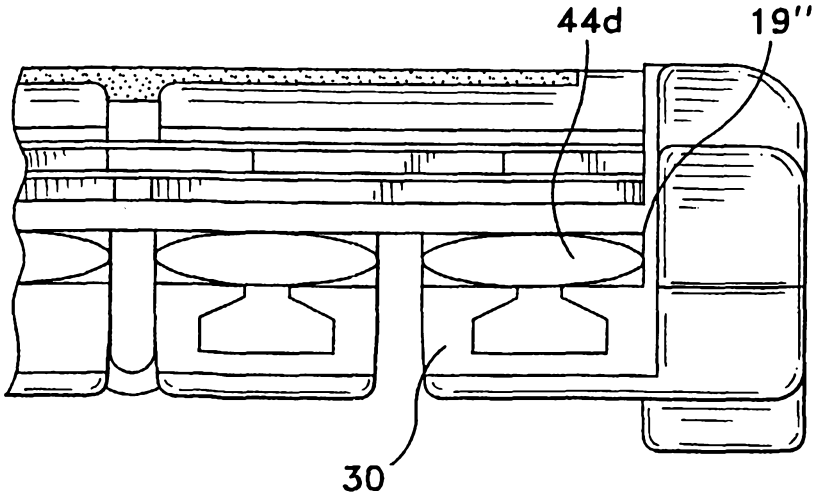

FIG-12

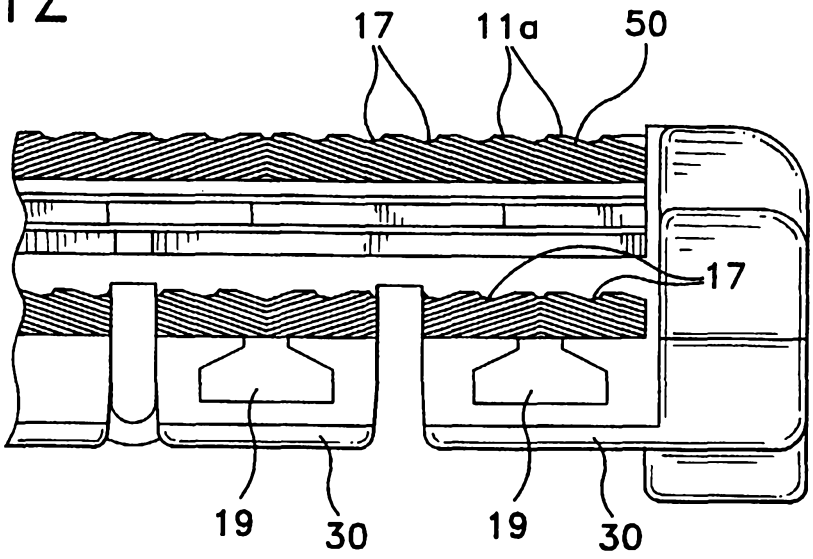

FIG-13

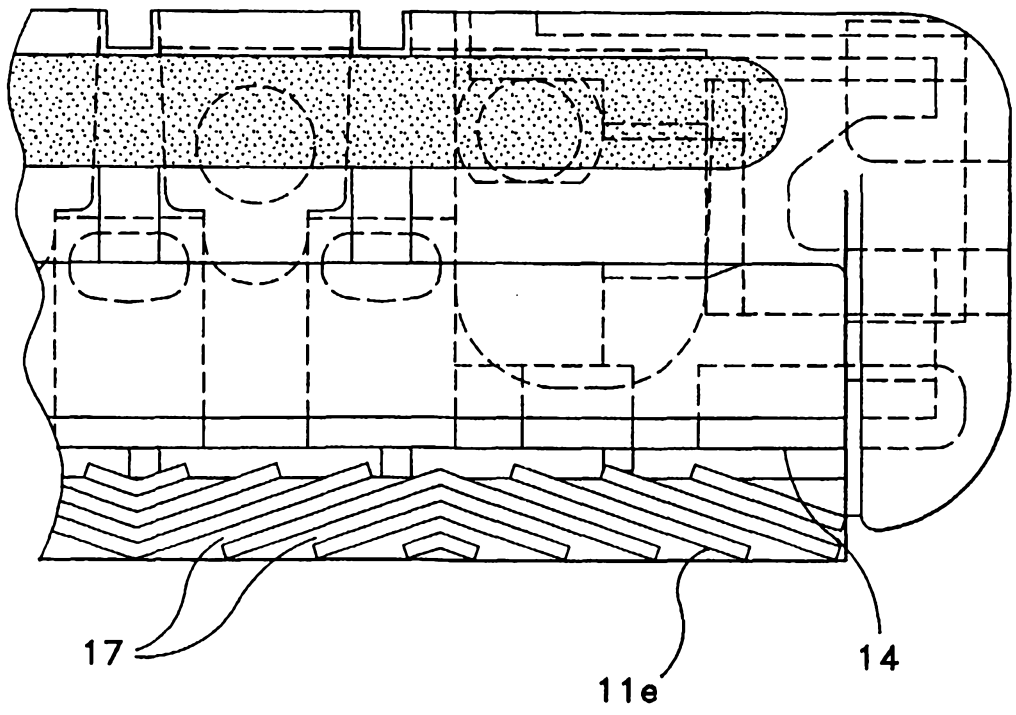

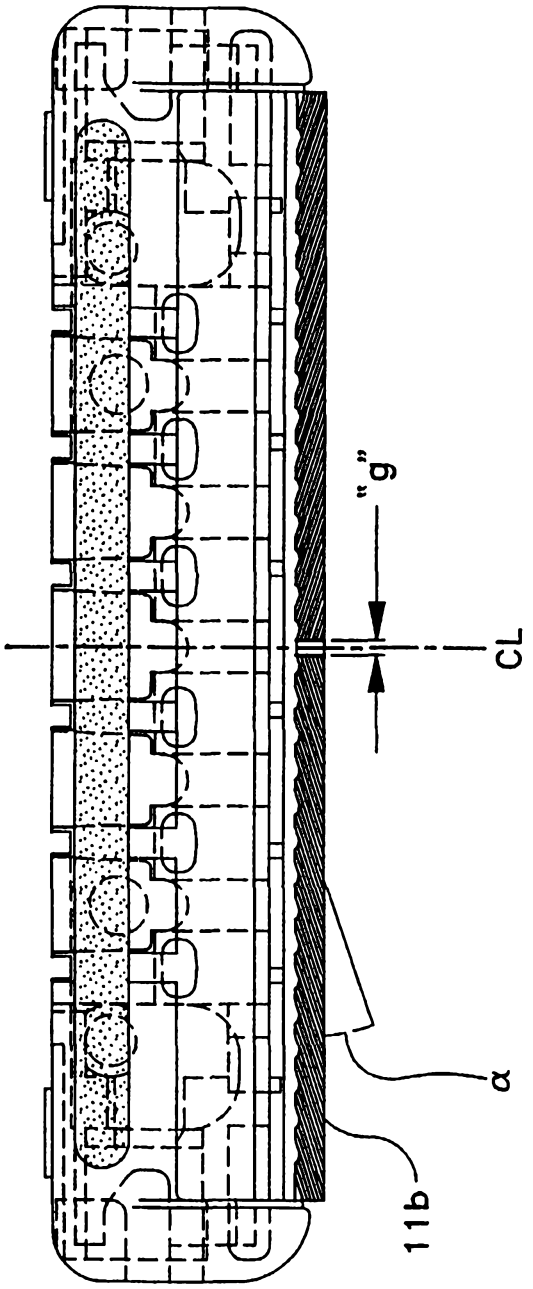

FIG-14