Aug. 19, 1941. B. H. BARNES ET AL 2,252,692

MEANS FOR APPLYING EXPANSIBLE COLLARS

Filed Feb. 1, 1939 3 Sheets-Sheet 1

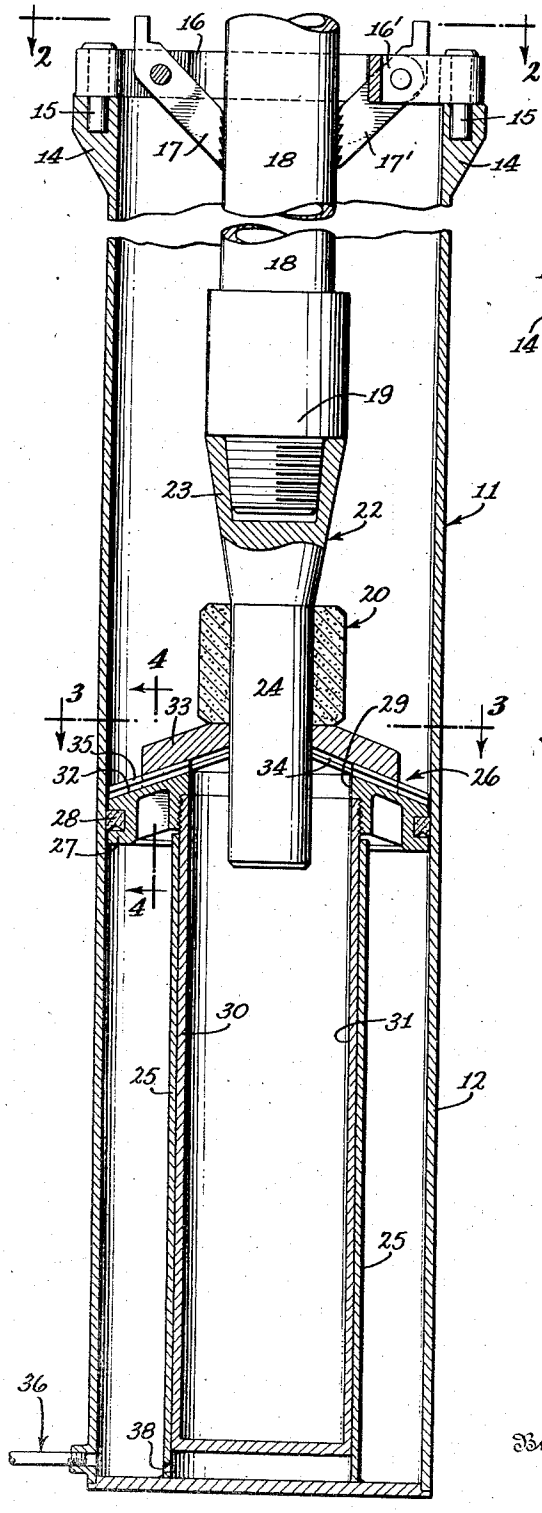

Fig. 1.

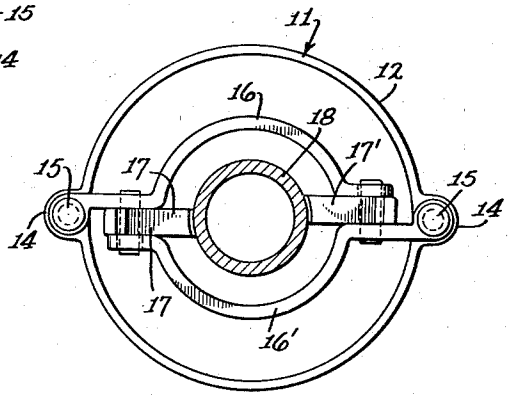

Fig. 2.

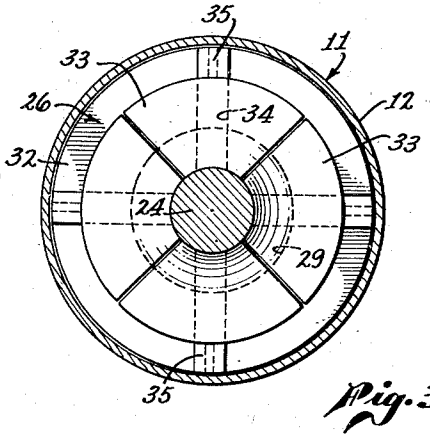

Fig. 3.

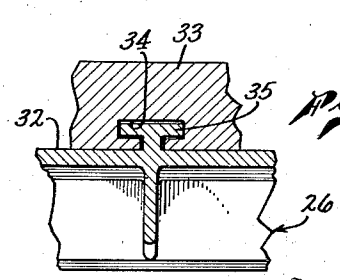

Fig. 4.

Inventor

BYRON H. BARNES,
BURT S. MINOR,

By [signature]

Attorney

Aug. 19, 1941. B. H. BARNES ET AL 2,252,692

MEANS FOR APPLYING EXPANSIBLE COLLARS

Filed Feb. 1, 1939 3 Sheets-Sheet 2

Fig. 5.

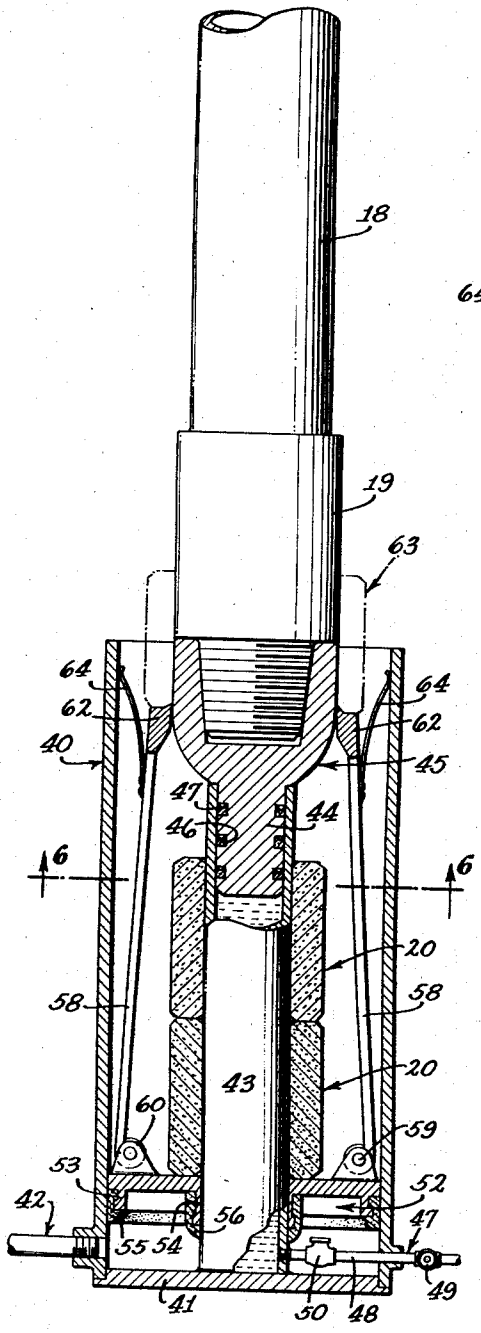

Fig. 6.

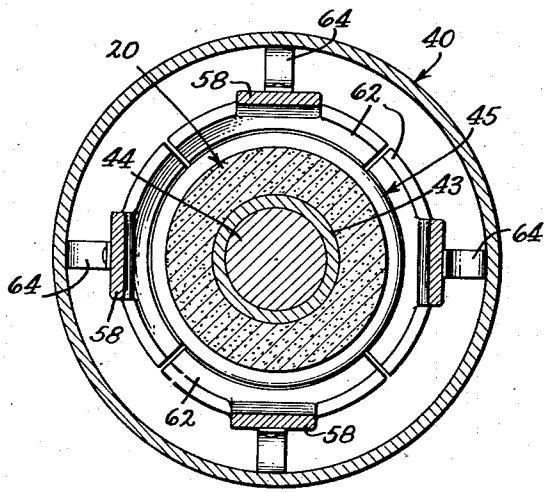

Fig. 7.

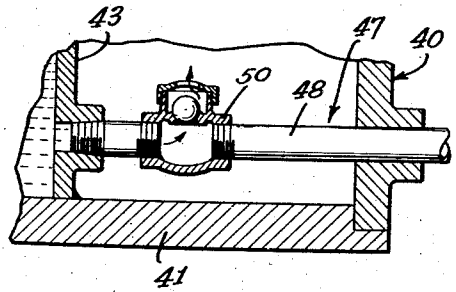

Inventor
BYRON H. BARNES,
BURT S. MINOR,

By Francis Rathbone

Attorney

Aug. 19, 1941. B. H. BARNES ET AL 2,252,692

MEANS FOR APPLYING EXPANSIBLE COLLARS

Filed Feb. 1, 1939 3 Sheets-Sheet 3

Fig. 8.

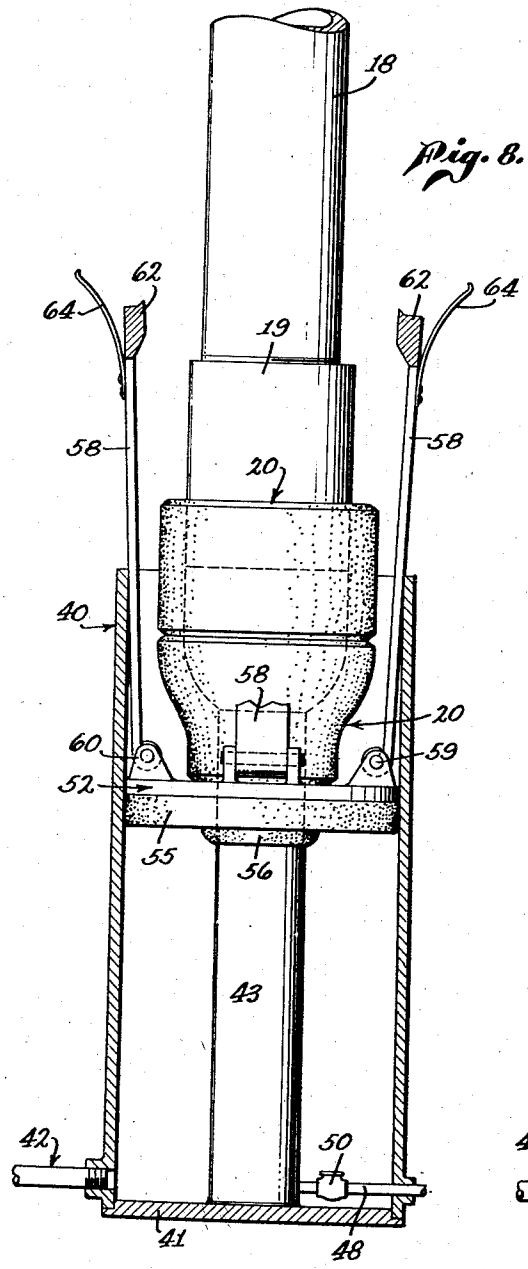

Fig. 9.

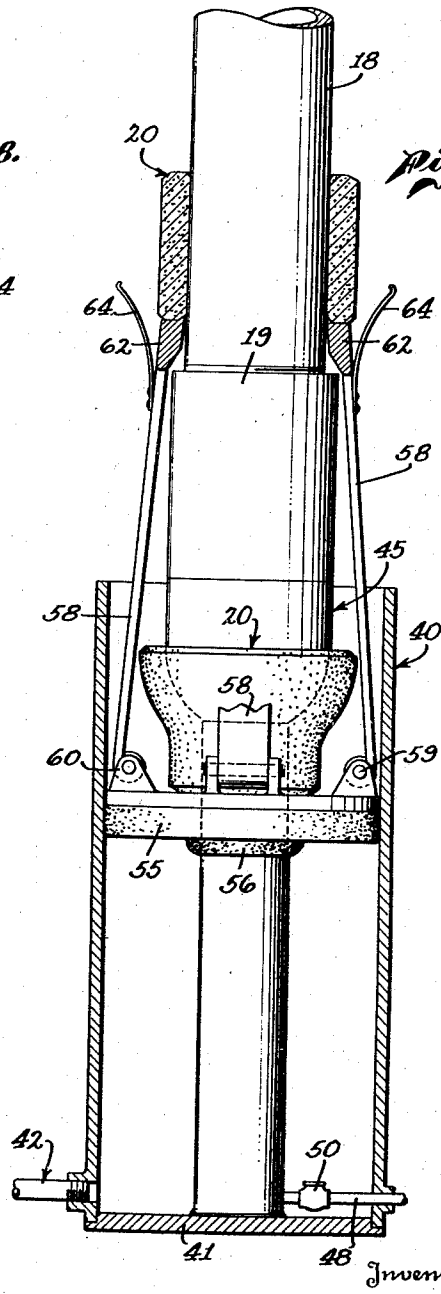

Inventor

BYRON H. BARNES,
BURT S. MINOR,

By Frank Rabenbaum

Attorney

Patented Aug. 19, 1941

2,252,692

UNITED STATES PATENT OFFICE

2,252,692

MEANS FOR APPLYING EXPANSIBLE COLLARS

Byron H. Barnes, San Marino, and Burt S. Minor, Whittier, Calif., assignors to Bettis Rubber Co. Ltd., Los Angeles, Calif., a corporation of California

Application February 1, 1939, Serial No. 254,026

13 Claims. (Cl. 29—88.2)

This invention relates generally to means for applying expansible collars formed of rubber or the like to members of larger diameter than the diameter of the bore of the collar. More particularly, the invention relates to the application of expansible collars or protector rings to drill pipe in the art of drilling oil wells.

It is the usual practice at the present time in the oil industry to apply rubber or rubber composition collars to drill pipe to prevent contact of the drill pipe with the casing and thereby serve as bearings or bearing surfaces for the drill pipe as it rotates in the casing, the rubber rings or protectors being lubricated by the rotary mud.

The present practice of applying such protectors, which will be referred to herein as expansible collars, to the best of our knowledge is to attach a cone or mandrel to the lower end of a stand of drill pipe hanging in the derrick and to force the expansible collar over the mandrel and the joint at the end of the pipe by lowering the stand of pipe through the expansible collar supported upon radially movable members adapted to engage the lower end of the collar.

An exception to this practice is the use of apparatus disclosed in application for patent on Hydraulic expander and applicator for short elastic tubes, by Burt S. Minor, Serial No. 161,599, filed August 3, 1937. With the ordinary apparatus for applying expansible collars to drill pipe it is necessary to rely upon the weight of the suspended drill pipe in order to force the expansible collar over the cone or mandrel on to the pipe. Since it is the usual practice to make the protectors or expansible collars of less diameter than the diameter of the drill pipe, it has been found that the weight of the suspended drill pipe is not always sufficient to accomplish the necessary expansion of the collar to cause it to pass on to the pipe and it is the practice of many oil field drillers to allow the hook and elevators to bump the top of the stand of drill pipe in order to gain the additional necessary force. This practice of course is not only dangerous but is apt to cause damage to the threaded ends of the stand of pipe.

Therefore, it is a primary object of this invention to provide a new and improved apparatus for applying expansible collars to drill pipe utilizing pressure fluid for producing the force necessary for applying the expansible collar whereby reliance on the weight of the suspended stand of pipe is eliminated. In this connection it is a particular object of the invention to provide apparatus which is designed to function properly utilizing water at the ordinary pressures it is available in the oil field in the majority of cases. In this connection only a small amount of water pressure is needed for the operation of the apparatus.

It is also an object of this invention to provide apparatus of the type indicated which will completely apply an expansible collar to a drill pipe without need for any further operation and which will do this without the necessity of movement of the drill pipe after the operation has been begun. In this connection it is an object to provide apparatus which will apply the expansible collar without in any way injuring the collar.

It is also an object of this invention to provide apparatus of the type indicated which is adaptable for use in applying expansible collars to drill pipe when the drill pipe is in some position other than a vertically extending position.

These and other objects will be apparent from the drawings and the following description of the invention. Referring to the drawings which are for illustrative purposes only;

Fig. 1 is a sectional elevation of one form of the apparatus of this invention;

Fig. 2 is a sectional plan view on line 2—2 of Fig. 1;

Fig. 3 is a sectional plan view on line 3—3 of Fig. 1;

Fig. 4 is a fragmentary sectional elevation taken on line 4—4 of Fig. 1;

Fig. 5 is a sectional elevation of another form of the invention;

Fig. 6 is a sectional plan view on line 6—6 of Fig. 5;

Fig. 7 is a sectional detail of the check valve mechanism of Fig. 5;

Fig. 8 is a sectional elevation of the apparatus of Fig. 5 in elevated position; and

Fig. 9 is a sectional elevation of the apparatus of Fig. 5 in elevated position and showing the apparatus in relation to an expansible collar which has been applied to the drill pipe.

It may be said that the invention comprises generally the application of fluid pressure to an expansible collar for forcing that collar over a mandrel or conical section mounted on the end of a drill pipe.

More particularly describing the invention, referring to Figs. 1 to 4, reference numeral 11 generally indicates a cylinder which comprises the side walls 12 and bottom closure 13. At the upper end of the cylinder are formed lug portions 14 which support bolts 15 rigidly mounted therein. Pivotally mounted on the bolts 15 are a pair

of supporting members 16, 16' which are provided with pivotally mounted dogs 17, 17' respectively. These dogs 17 are adapted for engagement with the drill pipe 18 to which it is desired to apply an expansible collar generally indicated by reference numeral 20. The purpose of the assembly 16, 16'—17, 17' is to prevent upward movement of the drill pipe during application of a collar. A mandrel 22 is provided which may be threadably mounted on the pin 19 of a drill pipe and the mandrel is provided with a substantially conically disposed portion 23 and a cylindrical portion 24 of reduced diameter. The portion 24 is of size to freely accommodate the collar 20.

Mounted on the bottom closure plate 13 is an upwardly extending tubular member 25 which forms a guide for a piston subsequently to be described. Slidable in the cylinder 11 is a piston generally indicated by reference numeral 26. This piston comprises an annular member 27 provided with a suitable packing ring 28 and having a center opening 29 of sufficient diameter to accommodate a pin or enlarged end portion 19 of the drill pipe 18. Mounted on the piston is a tubular member or tubular extension 30 which is closed at its lower end. The annular member 27 and tubular extension 30 together form a piston which may be described as having an elongated recess 31. This recess is of sufficient length to accommodate the mandrel 22, pin 19 and a portion of the drill pipe 18.

Mounted on the top of the piston 26, which is provided with a downwardly and outwardly sloping upper surface 32, are radially movable collar engaging members 33 (see Fig. 3). These members cooperate when in the position shown in Figs. 1 and 3 to form a segmented annular member which is engageable with the lower end of the collar 20. Each of the members 33 is provided with a T slot 34 which is adapted to accommodate a radially positioned tongue or T track 35 on the top of the piston 26.

Means are provided, as the conduit generally indicated by reference numeral 36, for admitting a pressure fluid to the region of the cylinder 11 below the piston 26. A communicating means, such as port 38 is also provided in the lower end of the tubular member 25 in order to permit pressure fluid to readily pass into the region interiorly of the member 25.

In the operation of the apparatus shown in Figs. 1 to 4 the mandrel 22 is first attached to the lower end of a stand of drill pipe after which the expansible collar 20 is placed upon the reduced portion 24 of the mandrel. The drill pipe is then lowered into cylinder 11 until it is in approximately the position shown in Fig. 1, care being taken to insure that the radially movable members 33 on top of piston 26 are in their innermost position where they will engage the lower end of the expansible collar 20. The means 16, 16', 17, 17' is then adjusted as to engage the drill pipe 18 and a pressure fluid is then admitted to cylinder 11. It has been found practical to use water under pressure and in this connection it has been found that water under a pressure of 50 lbs. is sufficient. The pressure fluid forces piston 26 upwardly thereby forcing expansible collar 20 over the tapered or conical portion 23 of the mandrel 22 and on over and beyond the pin 18' at the lower end of the drill pipe. During upward movement of the piston the members 33 may expand by moving radially outward so as to pass over the larger portions of the mandrel and drill pipe. Preferably the portions 34, 35 are well lubricated and preferably lubrication is supplied to the mandrel and pin 19 in order to expedite movement of the collar 20 thereover. As these collars are usually of rubber or rubber composition, merely wetting of the parts 23 and 19 with water is sufficient to lubricate them.

In Figs. 5 to 9 there is shown another form of the invention. Referring to these figures reference numeral 40 indicates a cylinder which is provided with a bottom closure 41 and a conduit means 42 for admittance of a pressure fluid. The cylinder has mounted on the bottom closure member 41 an upwardly extending tubular member 43 which is concentric with the cylinder. This member 43 is designed to freely accommodate one or more expansible collars 20 thereon and is designed to receive a reduced cylindrical portion 44 of a mandrel 45 which is adapted to be threadably attached to the pin 19 of an ordinary drill pipe 18. The portion 44 of the mandrel 45 is provided with grooves 46 for the reception of sealing rings 47. At the lower end of the tubular member 43 there is provided conduit means indicated by reference numeral 47 for admitting fluid, preferably liquid, to the interior of the member 43. This means comprises the conduit 47, valve 49 and a check valve 50 (see Fig. 7). The check valve 50 is designed to permit escape of fluid from the interior of the tubular member 43 but is designed to prevent flow of fluid from the region externally of the valve 50 to the interior of the tubular member 43.

With this construction the tubular member 43 may be filled with liquid after which valve 49 may be closed. The mandrel 45 may then be inserted in the upper end of the tubular member 43 as shown in Fig. 5 of the drawings and the liquid in the tubular member 43 may escape through check valve 50 and permit the insertion of the mandrel. With valve 49 closed, the mandrel 45 may not be withdrawn from the tubular member 43 since there is no means by which liquid may enter the tubular member 43. The above construction thereby provides means for holding down the mandrel 45 and the drill pipe to which it is attached during application of the expansible collar thereto as will subsequently be described.

Mounted interiorly of the cylinder 40 is a piston generally indicated by reference numeral 52 which is provided with the flanges 53 and 54 and packing rings 55 and 56 which may be of any suitable material. Mounted on the upper surface of the piston 52 are four arms 58 which are pivoted upon pins 59 (60). These arms are therefore adapted for pivotal radial movement. At the upper end of each arm there is provided a ring segment 62. These ring segments when in the position in which they are shown in Fig. 5 form a segmented ring as indicated in Fig. 6 and thereby form a supporting means for an expansible collar which is in the position shown by the broken lines generally indicated by reference numeral 63 in Fig. 5 or at some point thereabove. The arms are each provided with a spring 64 which is adapted to engage the interior of the cylinder 40 to yieldably force the arms inward when the piston is near the bottom of the cylinder.

In the operation of this form of the invention particular reference is made to Figs. 5, 8 and 9. In applying an expansible collar to the drill pipe 18 the mandrel 45 is attached to the pin 19 of the drill pipe. Two expansible collars

are then placed on the tubular member 43 and the drill pipe with its attached mandrel is then lowered into position so that the portion 44 of the mandrel is received in the upper end of the pipe 43 which has first been filled with liquid, preferably water, and valve 49 closed. The water may escape through check valve 50 from tubular member 43 ahead of the portion 44 of the mandrel, thereby permitting easy entrance of the mandrel into the member 43. With the parts in the position shown in Fig. 5, pressure fluid of any type may be admitted through the means 42 and this pressure fluid will force the piston 52 upwardly and movement of the piston is preferably continued until it reaches the position in which it is shown in Fig. 8. It is of course evident that the portion 19 and the mandrel may be wet first to provide lubrication for the passage of the expansible collar.

In this form of the invention it is preferable to use two expansible collars as indicated in the drawings and when the piston has been moved upwardly to the position in which it is shown in Fig. 8 the piston may then be caused to move downwardly which permits the lower expansible collar which may be termed a follower collar to recede and slip off of the mandrel and back on to member 43. The piston is permitted to descend to the bottom of the cylinder at which point the arms 58 and their ring segments 62 engage the expansible collar which is in position partly on the pin 19 and partly on the mandrel 45. This is shown in Fig. 5 where the position of the expansible collar is indicated in broken lines at 63.

Pressure fluid is then supplied to the cylinder and the piston is moved upwardly with the ring segments 62 in engagement with the lower end of the expansible collar to the position in which the parts are shown in Fig. 9 thereby moving the collar to the desired position upon the drill pipe.

During the upward movement of the piston in the first and second described operations the mandrel 45 and the connected drill pipe are held down by the fact that the portion 44 of the mandrel cannot leave the member 43 because valve 49 has been closed and check valve 50 prevents entrance of liquid thereinto. In this connection it should be pointed out that the parts 43 and 44 might be reversed, that is, the mandrel formed with a tubular extension which would fit over an upwardly extending stud or the like mounted on closure 41. Conduit 47 could pass through the stud.

For the purposes of illustration certain parts of the devices have not been shown in true proportion to certain other parts and in relation to the drill pipe. Particularly, in Figs. 1 to 3 the portion 24 of the mandrel and the expansible collar have been shown smaller relative to the drill pipe than is the case in actual practice. The same thing is true of parts 43, 44 and the expansible collars of Figs. 5, 6, 8 and 9.

It is also true that while one mandrel has been shown as having a frustroconical section and the other has been shown as having a semispherical section it is contemplated that insofar as the tapered portions of the mandrels are concerned the mandrels are interchangeable in the two forms of the invention. The word taper, as used herein, is defined to mean a diminution in size and is not confined to a form which is regularly narrowed to a point.

While it has been necessary to illustrate certain details of construction, it is not intended to limit the invention to the exact construction shown and described but it is intended to cover such changes and modifications as come within the scope of the claims.

We claim as our invention:

1. In apparatus for use in applying an expansible collar to drill pipe, a mandrel adapted to be attached to one end of a drill pipe, said mandrel having a portion of reduced diameter for the reception of an expansible collar; a cylinder closed at one end and open at the other; an inner guide cylinder in said first-mentioned cylinder; a piston in said cylinder, said piston having a tubular extension receivable in said inner guide cylinder, said piston having a recess extending the length of said tubular extension and adapted to freely accommodate said mandrel and the end of said pipe; a plurality of members mounted on said piston for radial movement and adapted to engage an end of an expansible collar on said mandrel; means for supplying said cylinder with a pressure fluid; and means on said cylinder for engagement with said pipe for preventing movement of said pipe relative to said cylinder.

2. A piston comprising: an annular member; a tubular member mounted on said annular member and having a closed end; and a plurality of radially slidable collar engaging members mounted on said annular member at the side opposite said tubular member.

3. In apparatus for applying an expansible collar to a member of greater diameter than the base of the collar, a mandrel adapted to be attached to one end of the member to which the collar is to be applied, said mandrel having a cylindrical portion of reduced diameter; a cylinder having a closed end and an open end; a tubular member mounted in said cylinder at the closed end thereof and concentric with said cylinder, said tubular member being adapted to closely receive the cylindrical portion of said mandrel and being adapted to accommodate an expansible collar; and an annular piston in said cylinder adapted to engage an end of an expansible collar on said tubular member.

4. In apparatus for applying an expansible collar to drill pipe, a mandrel adapted to be attached to one end of a pipe, said mandrel having a cylindrical portion of reduced diameter; a cylinder having a closed end and an open end; a tubular member mounted in said cylinder at the closed end thereof and concentric with said cylinder, said tubular member being adapted to closely receive the cylindrical portion of said mandrel and being adapted to accommodate an expansible collar; means for admitting liquid to said tubular member to fill same, said means including a valve for controlling entrance and escape of liquid; check valve means for permitting escape of liquid from said tubular member; and an annular piston in said cylinder adapted to engage an end of an expansible collar on said tubular member.

5. In apparatus for applying an expansible collar to drill pipe, a mandrel adapted to be attached to one end of a pipe, said mandrel having a cylindrical portion of reduced diameter; a cylinder having a closed end and an open end; a tubular member mounted in said cylinder at the closed end thereof and concentric with said cylinder, said tubular member being adapted to closely receive the cylindrical portion of said mandrel and being adapted to accommodate an expansible collar; and an annular piston in said

cylinder adapted to engage an end of an expansible collar on said tubular member and a plurality of radially pivotal arms mounted on said piston for engagement with an expanded expansible member on said mandrel.

6. In apparatus for applying an expansible collar to drill pipe, a mandrel adapted to be attached to one end of a pipe, said mandrel having a cylindrical portion of reduced diameter; a cylinder having a closed end and an open end; a tubular member mounted in said cylinder at the closed end thereof and concentric with said cylinder, said tubular member being adapted to closely receive the cylindrical portion of said mandrel and being adapted to accommodate an expansible collar; means for admitting liquid to said tubular member to fill same, said means including a valve for controlling entrance and escape of liquid; check valve means for permitting escape of liquid from said tubular member; and an annular piston in said cylinder adapted to engage an end of an expansible collar on said tubular member; a plurality of radially pivotal arms mounted on said piston; a ring segment on each of said arms, said ring segments together being adapted to form a segmented annular support for a collar; and spring means on each of said arms near the end farthest from said annular member engageable with said cylinder for yieldably forcing said arms inwardly.

7. In an apparatus for applying an expansible collar to a member of larger diameter than the bore of the collar, a cylinder having a closed and an open end, a guide mounted centrally of the cylinder and extending through the bore of said collar, an expanding mandrel providing a path of gradual enlargement from the diameter of the guide to the diameter of the member of larger diameter supported in axial alignment with and carried on said guide, a piston mechanism comprising an annular piston in said cylinder surrounding said guide and radially movable members on said piston engageable with said collar, said piston mechanism movable along and being guided by the guide as the collar is moved from the guide over the mandrel and onto the member of larger diameter, and means for admitting fluid pressure between said piston and the closed end of the cylinder.

8. In an apparatus for applying an expansible collar to a member of larger diameter than the bore of the collar, a cylinder having a closed and an open end, a guide mounted centrally of the cylinder and extending through the bore of said collar, an expanding mandrel providing a path of gradual enlargement from the diameter of the guide to the diameter of the member of larger diameter supported in axial alignment with and carried on said guide, means cooperating with said member and mandrel to hold the mandrel against movement away from the closed end of the cylinder, a piston mechanism comprising an annular piston in said cylinder surrounding said guide and radially movable members on said piston engageable with said collar, said piston mechanism movable along and being guided by the guide as the collar is moved from the guide over the mandrel and onto the member of larger diameter, and means for admitting fluid pressure between said piston and the closed end of the cylinder.

9. In an apparatus for applying an expansible collar to a member of larger diameter than the bore of the collar, a cylinder having a closed and an open end, a guide mounted centrally of the cylinder and extending through the bore of said collar, an expanding mandrel providing a path of gradual enlargement from the diameter of the guide to the diameter of the member of larger diameter supported in axial alignment with and carried on said guide, a piston in said cylinder surrounding said guide and having a collar engaging surface, said surface engaging a second collar on said guide and movable to force both collars along the guide to position the first collar on the expanding mandrel, and radially movable members on said piston engaging the collar previously so positioned on said mandrel for forcing the same onto the member of larger diameter, and means for admitting fluid pressure between the cylinder and piston.

10. In an apparatus for applying an expansible collar to a member of larger diameter than the bore of the collar, a cylinder having a closed and an open end, a guide mounted centrally of the cylinder and extending through the bore of said collar, an expanding mandrel providing a path of gradual enlargement from the diameter of the guide to the diameter of the member of larger diameter supported in axial alignment with and carried on said guide, a piston mechanism comprising an annular piston in said cylinder surrounding said guide and radially movable members on said piston engageable with said collar, said piston mechanism movable along and being guided by the guide as the collar is moved from the guide over the mandrel and onto the member of larger diameter, means carried by said cylinder for engaging said member at a point spaced from the end thereof to prevent movement of said member away from the closed end of the cylinder, and means for admitting fluid pressure between said piston and the closed end of the cylinder.

11. In an apparatus for applying an expansible collar to a member of larger diameter than the bore of the collar, a cylinder having a closed and an open end, a guide mounted centrally of the cylinder and extending through the bore of said collar, an expanding mandrel providing a path of gradual enlargement from the diameter of the guide to the diameter of the member of larger diameter supported in axial alignment with and carried on said guide, a piston mechanism comprising an annular piston in said cylinder surrounding said guide and radially movable members on said piston engageable with said collar, said piston mechanism movable along and being guided by the guide as the collar is moved from the guide over the mandrel and onto the member of larger diameter, said piston having an elongated recess therein of sufficient diameter to freely accommodate said mandrel and the end of said member, and means for admitting fluid pressure between said piston and the closed end of the cylinder.

12. In an apparatus for applying an expansible collar to a member of larger diameter than the bore of the collar, a cylinder having an open end, a guide mounted centrally of the cylinder and extending through the bore of said collar, an expanding mandrel providing a path of gradual enlargement from the diameter of the guide to the diameter of the member of larger diameter supported in axial alignment with and operatively connected with said guide, a piston mechanism comprising an annular piston in said cylinder surrounding said guide and radially movable means on said piston engageable with said collar, said piston mechanism being movable along and

guided by the guide as the collar is moved from the guide over the mandrel and onto the member of larger diameter, and means for admitting fluid pressure into the cylinder to operate said piston.

13. An apparatus for applying an expansible collar to a member of larger diameter than the bore of the collar, comprising an expanding mandrel providing a path of enlargement from the bore of the collar to the outer surface of the member of larger diameter, an elongated guide mounted in axial alignment with said mandrel adapted for receiving a collar and guiding it onto said mandrel for expansion, means operatively connecting said guide and mandrel for the said guiding of said collar, cylinder means surrounding said guide and operatively connected thereto, piston means operating in said cylinder means and including means engaging said guide, whereby said piston means surrounds said guide and is guided thereby, radial movable means operated by said piston means for forcing said collar along the guide and over the mandrel, and means for admitting fluid to said cylinder means for operating the piston.

BYRON H. BARNES.
BURT S. MINOR.