Nov. 23, 1937. D. TAYLOR 2,100,112

METHOD OF COLLECTING LINT

Original Filed June 5, 1936 2 Sheets-Sheet 1

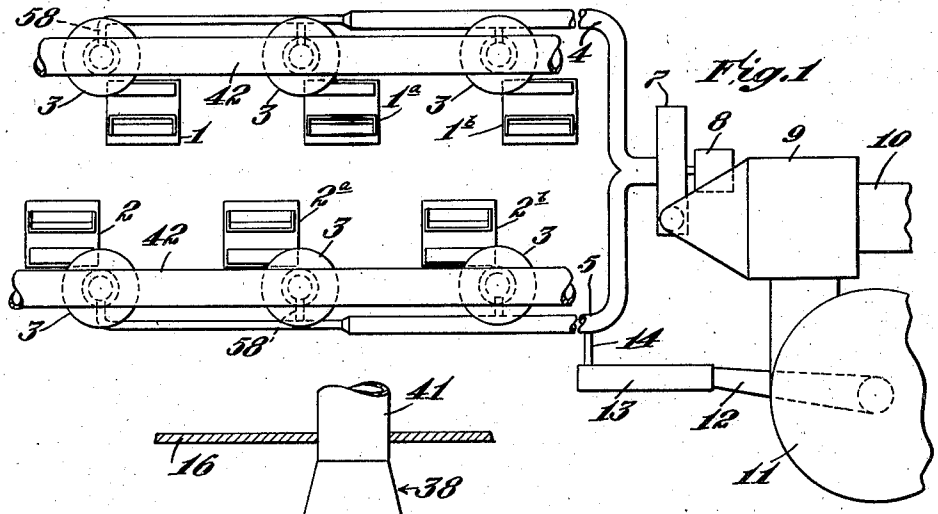

Fig. 1

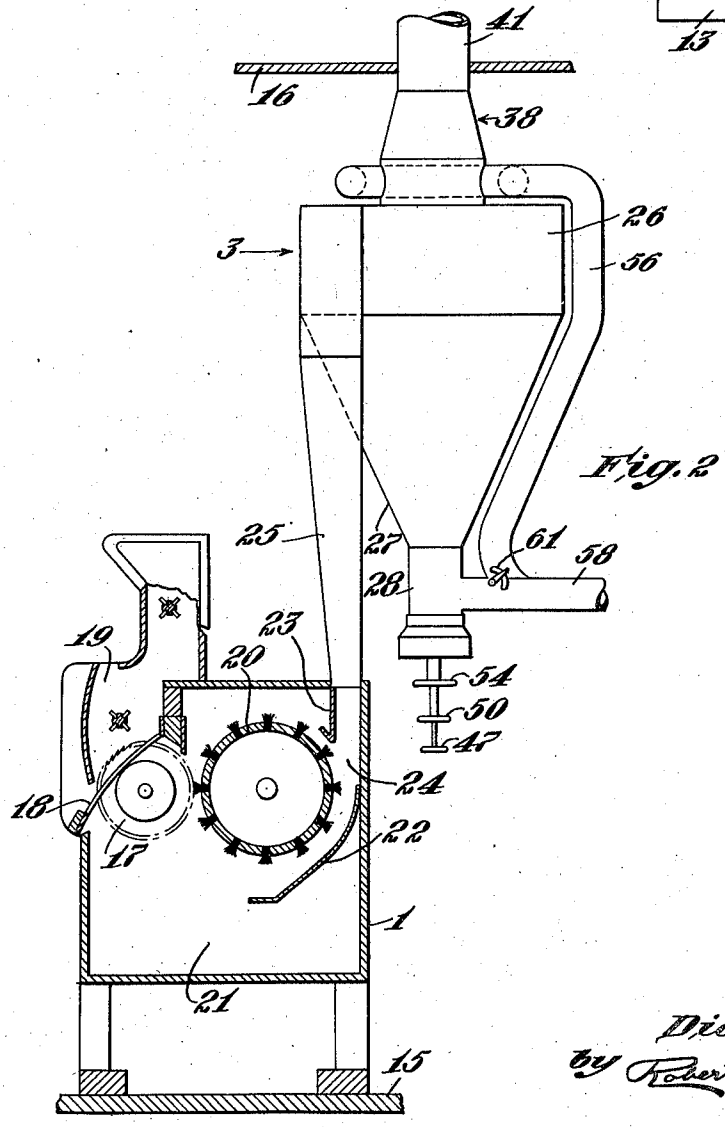

Fig. 2

Inventor
Dick Taylor
By Roberts Cushman & Woodberry
Attys.

Nov. 23, 1937. D. TAYLOR 2,100,112

METHOD OF COLLECTING LINT

Original Filed June 5, 1936 2 Sheets-Sheet 2

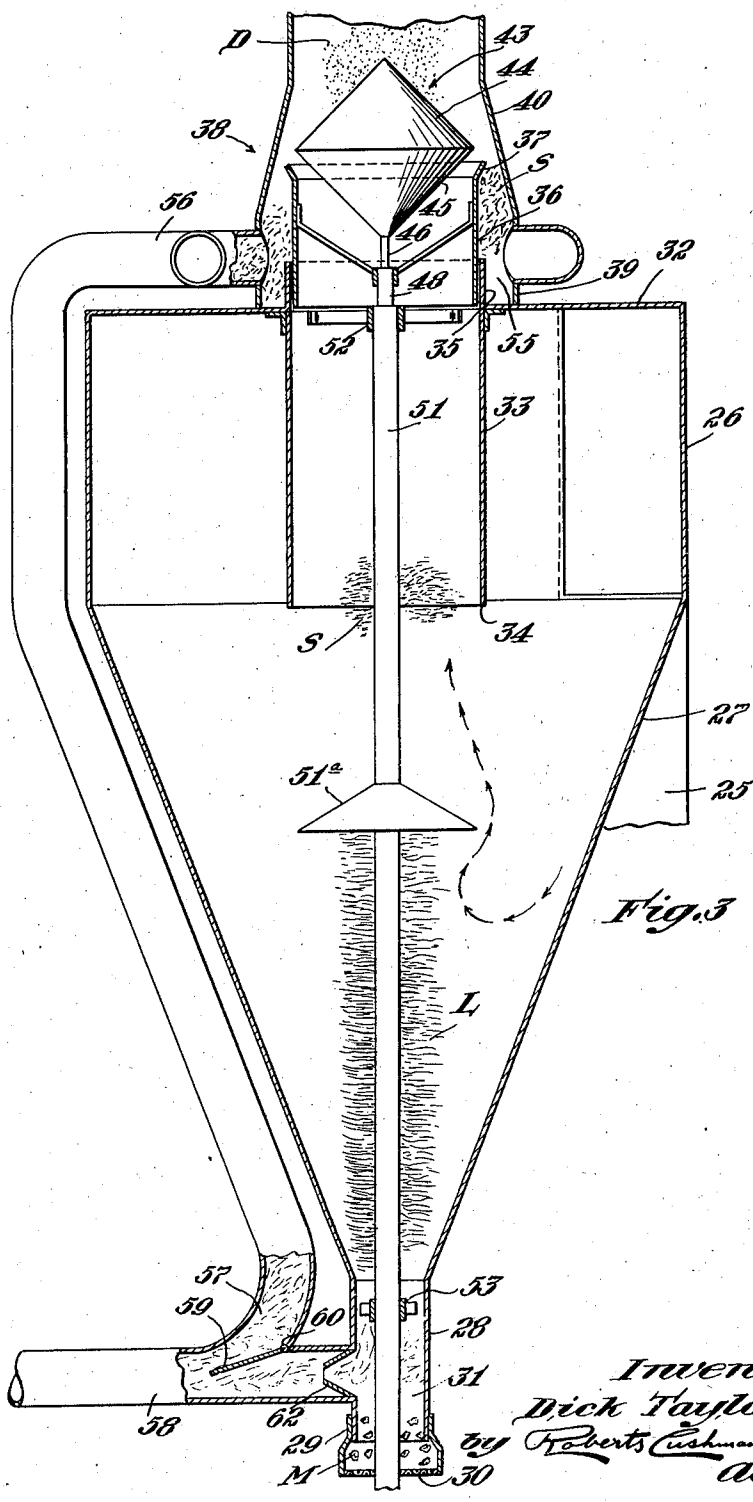

Fig. 3

Inventor
Dick Taylor
by Roberts Cushman & Woodberry
Att'ys.

Patented Nov. 23, 1937 2,100,112

UNITED STATES PATENT OFFICE

2,100,112

METHOD OF COLLECTING LINT

Dick Taylor, Paris, Tex., assignor to Southland Cotton Oil Company, Paris, Tex., a corporation of Texas

Original application June 5, 1936, Serial No. 83,650. Divided and this application February 24, 1937, Serial No. 127,462

3 Claims. (Cl. 19—72)

This invention relates to a method of collecting lint from cotton ginning delinting or similar apparatus, being a division of United States application Serial No. 83,650, filed by Dick Taylor on June 5, 1936.

While the herein described method is not necessarily dependent upon the specific apparatus herein disclosed for its effective performance the invention is conveniently elucidated by reference to apparatus suitable for carrying it into effect. Thus in the accompanying drawings wherein one desirable embodiment of means useful in the practice of the invention is shown by way of example,

Fig. 1 is a diagrammatic plan view, with certain parts broken away, showing how the invention may be applied to a battery of linter gins;

Fig. 2 is a side elevation, partly in vertical section, diagrammatically illustrating a linter gin with my improved dust separator associated therewith; and

Fig. 3 is a vertical section, to larger scale, showing the dust separator in detail.

Referring to the drawings, and in particular to Fig. 1, two series of linter gins are illustrated as arranged in a battery delivering fiber to a common condenser. The gins of one series are indicated at 1, 1a, 1b, etc. and those of the other series at 2, 2a, 2b, etc. Each gin of each series is provided with a dust separator 3, such as hereinafter more fully described, the lint from the separators associated with the gins 1, 1a, 1b, etc., being delivered to a lint-conveying trunk 4, while the lint from the separators associated with the gins 2, 2a, 2b, etc., is delivered to a lint-conveying trunk 5. These trunks 4 and 5 in turn deliver to a trunk 6 leading to a fan 7 driven by a suitable motor 8. The lint-laden air is delivered by the fan to a condenser 9 of any suitable type which separates the useful lint from the air and delivers the lint, either in the form of a lap roll, or onto a conveyor 10, as desired. The air from the condenser preferably is delivered to a cyclone dust separator 11 of any appropriate type in which the heavier particles, including some very short lint, drop to the bottom, while the dust-laden air escapes from the top and is discharged outside of the ginning room. The heavier particles, including the very short lint, may be carried by the conveyor duct 12, if desired, to a dust separator 13 where the very fine particles of dust, for example hull-pepper, are separated from the short fiber and the latter is then conveyed by the conductor pipe 14 back into the link-conducting trunk 5 and thence to the fan and condenser.

The several gins of the battery may, for example, be supported upon the floor 15 of the ginning room, such room having a roof or ceiling 16 and preferably being high enough to accommodate the dust separators 3, although it is contemplated that these separators may be placed above the ceiling or roof 16 if desired. Each gin 1, 1a, etc. comprises a casing enclosing a saw cylinder 17 which cooperates with a grate-fall 18,—the casing also defining the roll box 19 and enclosing the doffer brush 20. This doffer brush is driven at high speed and is adapted to strip off the fiber from the teeth of the saw cylinder, delivering the fiber into the moting space 21 in the lower part of the gin casing. In this space heavy particles, including leaf and trash, are separated out by gravitation, while the useful fiber remains in suspension in the air current generated by the doffer brush. In accordance with the present invention the casing is provided with a pair of deflector plates 22 and 23, respectively, which partially encircle the doffer brush and which define the entrance 24 to a lint flue 25 extending from the gin to the corresponding dust separator 3.

Referring to Fig. 3, the improved dust separator of the present invention comprises a casing, preferably including a substantially cylindrical upper part 26, an intermediate, downwardly convergent, truncated conical portion 27, and a vertically elongate lower portion 28, which is preferably of substantially cylindrical section and which includes a telescopically adjustable lower portion 29 having a bottom 30 which is perforated or formed as a grid so as to permit the escape of small solid particles which may settle to the lower end of the part 29. By adjustment of the part 29 relatively to the fixed part 28, the length of the chamber 31 in the lower part of the casing may be varied, this chamber constituting a secondary moting space.

The top of the dust separator casing is closed by a member 32 having a central opening, from the edge of which depends a cylindrical baffle member 33 open at top and bottom. This baffle member extends down to the point 34, substantially in the horizontal plane of the lower end of the cylindrical portion of the casing. This cylindrical baffle member 33 is continued upwardly above the top plate 32 of the casing as a relatively short annular flange 35. A cylindrical thimble or gate-member 36 is arranged to telescope within the upstanding flange member 35, such thimble or gate-member being furnished with an outwardly flaring marginal portion 37 at

its upper end. This gate-member 36 is housed within a hood 38 mounted upon the top 32 of the casing and comprising a lower substantially cylindrical portion 39 (concentric with but of greater diameter than the upstanding flange 35) and an upper upwardly convergent truncated conical portion 40 whose upper end is joined to the lower end of a dust flue 41. This dust flue 41 extends up through the ceiling or roof 16 of the ginning room. If desired, each individual dust flue 41 may extend directly to the open air or, if preferred, the several dust flues 41 may be connected to a common trunk flue 42 (Fig. 1) extending along the series of gins and eventually leading to the outer atmosphere so that the dust which passes out through the flues 41 will be carried away from the ginning room.

Within the conical portion 40 of the hood there is arranged a deflector or valve-member 43 preferably comprising two conical members 44 and 45 joined at their bases, the lower conical member 45 being disposed with its point downward within the upper part of the gate-member 36. This lower conical member 45 is secured to the upper end of a supporting and adjusting rod 46 which passes downwardly from top to bottom of the separator casing and out through the member 30,—being furnished at its lower end with an actuating element, for example a crossbar 47 (Fig. 2), by means of which the rod 46 and the deflector-valve 43 may be vertically adjusted.

The rod 46 slides, with sufficient friction to hold it in adjusted position, within a sleeve 48, the upper end of which is furnished with arms whose outer ends are secured to the gate-member 36 and which, with the sleeve 48, furnish a support for the gate 36. This sleeve 48, like the rod 46, extends down through the casing and through the bottom member 30 and is furnished at its lower end with an actuating member, for example a disk 50 (Fig. 2), by means of which the sleeve may be moved vertically for adjusting the gate 36.

The sleeve 48 in turn is arranged to slide, with sufficient friction to hold it in adjusted position, within an outer sleeve 51, having bearings 52 and 53 in spiders carried by the top member 32 and by the cylindrical member 28, respectively, of the casing. This outer sleeve 51 forms a support for a guard or regulator 51ª preferably of truncated conical form, convergent upwardly and which is disposed within the conical portion 27 of the casing and suitably spaced from the lower end 34 of the baffle 33. The sleeve 51 also extends down through the bottom 30 of the casing and is furnished with a suitable actuating element such, for example, as a disk 54 or the like, the sleeve 51 moving with sufficient friction in the bearings 52 and 53 to maintain it in adjusted position.

The annular space 55 between the gate-member 36 and the cylindrical part 39 of the hood constitutes a collecting chamber for short particles S of lint which have been carried upwardly through the cylindrical baffle 33 with the outgoing current of air. From the annular lint-collecting chamber 55 a trunk 56 extends downwardly along the outside of the casing to the point 57 where it enters the lint conductor conveyor tube 58, the latter leading from the chamber 31 at a point substantially above the bottom of the latter. In one desirable arrangement, the delivery end of the lint trunk 56 is provided with a controlling valve 59 mounted, for example, on a shaft 60 projecting outside of the lint-conveying duct and having a lever 61 by means of which the shaft may be turned and the valve adjusted. Any appropriate means may be provided for holding the valve in adjusted position. Alternatively, in place of the valve 59 or in addition thereto, as desired, there is provided a conical nozzle 62 at the entrance to the lint conduit 58 where the latter emerges from the chamber 31. The lint conduits 58 from the several separators of the two series extend to the trunks 4 and 5, respectively, which, as above noted, carry the lint to the fan 7 and thence to the condenser device 9.

In the operation of the device, the lint-laden current of air created by the doffer brush 20 of a given gin passes up through the flue 25 and enters the upper part 26 of the corresponding dust collector in a tangential direction. The air is thus caused to take up a cyclonic motion within the casing of the dust collector, such motion tending to cause the lint and other solid particles sustained in the air current to move toward the axis of the dust collector casing, the heavier particles tending to settle toward the bottom. Thus, as indicated in Fig. 3, as the air current circulates, entering near the top of the casing, and first sweeping downwardly as it circles and then rising toward the center to escape upwardly through the baffle 33, the longer and heavier particles L of lint gradually move toward the axis of the casing and sink toward the bottom of the casing while the air, partially freed from such solid particles, escapes up around the edge of the regulator 51ª and thence up into the lower end of the cylindrical baffle 33. By adjustment of the height of the regulator 51ª, it is possible to assure an almost complete separation of the longer lint from the air before the latter enters the lower end of the baffle 33. The longer and heavier lint L settles down into the cylindrical lower portion 28 of the casing, and as a portion of the air also passes down through this part of the casing, this longer and heavier lint is swept out through the nozzle 62 into the conduit 58. However, just at the entrance to the nozzle 62, the air, laden with lint, is caused to make a sharp change in direction, thus causing it to eddy, thereby facilitating the separation of such heavier particles as leaf trash, which sink down into the chamber 31 and then either drop out through the grid 30 or may be removed from time to time by separating the part 29 from the part 28 of the casing.

The air which moves upwardly about the lower edge of the regulator 51ª carries with it much fine dust and also some short and light particles S of lint. The volume of the air which passes up through the baffle 33 ordinarily is much greater than that which passes downwardly and out through the nozzle 62. This upwardly moving current of air strikes the lower surface of the deflector valve 43 and is diverted outwardly and over the edge of the outwardly flaring margin 37 of the gate 36. The sudden change in direction at this point causes eddies in the moving air, thus causing the separation of the particles S of lint from the relatively finer and lighter dust particles D. The separation at this point is dependent upon the relative positioning of the parts 43 and 36 with respect to each other and with respect to the upwardly convergent portion 40 of the hood, the necessary adjustments being accomplished by means of the actuating members 50 and 54, respectively. When these parts have once been adjusted to the proper position, it is not necessary to change their adjustment to any extent during the operation of the apparatus, except by reason of some substantial change in the character of

the fiber being operated upon or a change in the operating speed of the gin or the like.

The main body of the upwardly moving air current passes up through the dust flue 41 with its entrained dust particles D and is discharged, preferably outside of the building, at least not within the ginning room. However, some of the air passes down into the settling chamber 55 and thence out through the lint trunk 56, sweeping with it the lint S which collects in the chamber 55 and carrying it down to the point 57 where it is delivered into the lint duct 58. By proper setting of valve 59, the relative proportion of air which shall pass up through the lint flue 41 and which shall pass down through the trunk 56 may be determined, and such regulation in turn determines the completeness with which the short fiber S is separated from the dust-laden air current.

Instead of using a regulator such as the valve 59, the conical nozzle 62 may be employed, such nozzle determining the amount of air which can escape directly from the lower part of the main casing into the lint duct 58 and thus indirectly determining the amount of air which will be drawn down by induction through the lint trunk 56 from the chamber 55. For regulating the amount in this way, it is proposed to provide nozzles 62 of different capacities which may be interchanged one for the other in accordance with varying conditions. However, while either the valve 59 or the nozzle 62 may be employed alternatively, it is sometimes desirable to employ both in the same combination as adjunctive one to the other as here illustrated.

By means of the apparatus above described, it is possible to obtain a very complete separation of the lint from the air without resort to the employment of power driven parts, such as condenser screens or the like, and to deliver substantially all of the dust outside of the ginning room. Furthermore, the greater proportion of the air delivered by the individual gin is thus removed directly from the ginning room through the large but relatively short flues 41 which need not take up any substantial part of the working space within the ginning room, while the useful fiber is conveyed to the condenser 9 through the small diameter ducts 4 and 5, by relatively small air currents just sufficient to maintain the lint in suspension.

In this way the air of the ginning room is freed from dust; the power consumed in the operation of separating the lint from the air is reduced; the gin structure is simplified by the elimination of individual power-driven condenser devices and thus the floor space occupied by each individual gin is decreased; the useful fiber is all conveyed to one point of discharge so that it is not necessary to doff a lap roll from each individual gin at frequent intervals, as is ordinarily necessary; the resultant lap from the common condenser 9 is of more uniform character than can be expected when individual laps are formed at each gin; and by the arrangement herein described and claimed, a more complete separation of the lint from the air is effected than by usual means.

I claim:

1. That method of collecting useful lint from a battery of gin mechanisms each so devised as to deliver a lint carrying air current, said method comprising as steps keeping the lint and accompanying dust in air suspension and, while they are in air suspension, separating the useful lint from dust in accordance with the relative masses of the lint and dust particles, dividing the air current into two streams, in one of which the major part of the lint is suspended and in the other of which the major part of the dust is suspended, conducting each dust-laden air stream to a point of discharge remote from the gin mechanism, conducting the several lint-laden air streams away from the respective gin mechanisms, merging said lint carrying air streams, and separating the useful lint from the air after merger of said streams.

2. The herein-described method of collecting lint from a plurality of gins which consists in delivering the lint from each gin, together with entrained dust, in suspension in the air current produced by the gin and, while keeping them in air suspension, separating the useful lint from dust by centrifugal action, dividing said air current from each gin into two streams of relatively large and small volume, respectively, delivering the useful lint, while still suspended, into the smaller of said streams, causing the dust to be carried away with the larger air stream, merging the lint carrying air streams from the several gins, and separating the useful lint from the merged streams of air.

3. The herein described method of collecting lint from a plurality of linter gins which consists in delivering the lint from each gin, together with entrained dust, in suspension in a large volume of air flowing away from each gin and, while keeping them in air suspension, separating the useful lint from dust in accordance with the relative masses of the lint and dust particles, dividing said flowing air into two streams of relatively large and small volume, respectively, causing substantially all of the useful lint, while still suspended, to enter the smaller stream and to be carried along in suspension therein, causing substantially all of the dust to enter the larger air stream, merging the lint carrying streams from the several gins, and separating the useful lint from the merged streams.

DICK TAYLOR.