Nov. 8, 1955 C. E. LESHER 2,723,226

LOW TEMPERATURE CARBONIZATION PROCESS

Filed May 4, 1953

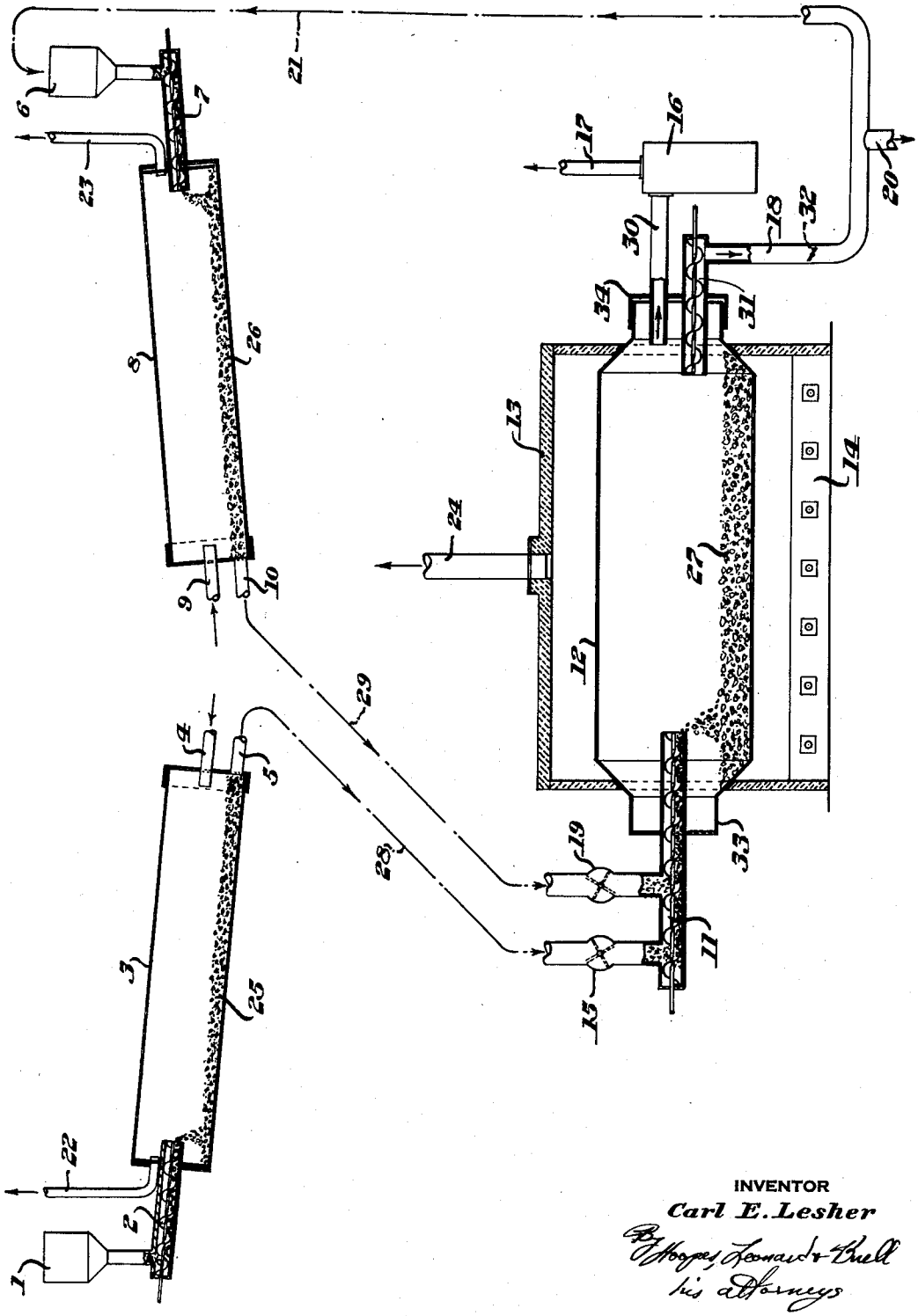

INVENTOR
Carl E. Lesher
By Hoopes, Leonard & Buell
his Attorneys

United States Patent Office

2,723,226

Patented Nov. 8, 1955

2,723,226

LOW TEMPERATURE CARBONIZATION PROCESS

Carl E. Lesher, Ben Avon Heights, Pa., assignor to Lesher and Associates, Inc., Pittsburgh, Pa., a corporation of Pennsylvania

Application May 4, 1953, Serial No. 352,735

7 Claims. (Cl. 202—14)

This invention relates to an improved process and apparatus for the low temperature carbonization or distillation of carbonaceous materials and more particularly for the distillation, preferably continuously, of carbonaceous materials that fuse or become plastic during the process of distillation, notably high volatile coking bituminous coal.

I have devised a process and apparatus for continuously producing by distillation of fine sized carbonaceous material that fuses or becomes plastic when heated, such as coking coal, a granular product having the approximate size range of the material charged.

An objective in distilling a carbonaceous material, as coal, lignite or oil shale, is to reduce the volatile matter content of the solid product and recover the volatile matter as gas, tar or oil. Another objective may be to produce as a solid product from the distillation process a hard structure coke as for the iron blast furnace. I produce from fine sized coal a fine sized coke or char, with recovery of the oils, tars and gases that are evolved by the distillation.

To distil coal or other carbonaceous material requires that it be heated. Coal and particularly a mass of fine coal is a very poor conductor of heat and it is therefore most quickly and efficiently heated when each particle is exposed to the source of heat. Many and diverse processes have been proposed to introduce heat to a mass of fine sized coal to distil or carbonize it. One process lays a thin layer, several particles deep, on a metal surface having such heat content and temperature that the coal is distilled. However, it has been generally recognized in the art that the most efficient method or process of introducing the heat is with a heated medium that mingles with the particles, transferring the heat to the coal by means of temperature differential and by reason of being in intimate contact with the coal particles. Two such media are available and have been proposed: (1) solids, and (2) gases including water vapor or steam. It has been proposed to heat the coal by dropping the particles vertically through a rising mass of preheated gas, or by radiant heat from vertical retort walls. The time of descent of the coal particles in such towers or retorts as it was economical to construct was a matter of a few seconds as compared with the minutes required, at the temperature potential available or expedient, for distillation to take place.

The fluid bed reactor is theoretically ideal as a means for introducing superheated gas or steam into a mass of fine particles, for in the fluid bed the gas is caused to rise at such a velocity and in such quantity that the bed particles are in constant motion and at more or less uniform temperature. Efficient and controllable heat transfer is had in the fluid reactor. Heat for distilling or carbonizing may be transferred to the coal while being transported in a pipe or tube by the gas in what is known as the dilute phase. There are other means of heating coal particles with hot gas, as tumbling the solids in a direct fired kiln or rotating cylinder.

Coal can be heated in the fluid reactor by developing the heat within the reactor by partial combustion of the charge. In that case the fluidizing medium is a gas containing oxygen so that at the temperatures within the retort the reaction causes combustion, thereby producing the heat required in the gas for distilling or carbonizing the coal.

As distinguished from gas as the medium carrying sensible heat to the mass of fine coal, solids may be and have been used. The solids preferred are either the end product of the coal carbonization, namely, coke or char, a metal, as pieces or balls of iron or steel that can be readily separated from the coke, or any other solid, such as quartz sand or other earthy material.

Each of the methods above referred to of heating fine sized coal by the sensible heat in a gaseous or solid medium mixed with the coal represents a practicable method, and all are well known in the art. The difficulty with all of such methods is that when a coking coal is heated it becomes plastic and sticky; the particles while plastic adhere to any surface they touch. The property of becoming liquid or plastic when raised to a particular elevated temperature, then losing volatile matter and again becoming a hard material is the property that distinguishes a coking coal from a non-coking coal.

A mass of undisturbed coking coal particles confined and heated within a retort such as a coke oven passes through the plastic stage and becomes a mass of coke. The same particles in motion while being heated, whether by the sensible heat of a solid or gaseous medium, or by heat applied externally through a retort wall, will likewise become plastic. Heated within confined space the structure of the coke will be dense and more or less film; heated in a loose, unconfined mass, the structure will be spongy throughout and the coke soft and easily crushed. This is a characteristic of high volatile coking coal.

There are a number of methods well known in the art by which coking coal of fine size can be coked to produce coke in more or less identical sizes as the coal. However, every method that depends upon introducing raw high volatile coking coal into a moving or turbulent bed of hot, fine non-coking material has met with the common difficulty of deposition of coke masses in the active bed of hot material, or of accretion on walls or other parts of the retort.

For instance, particles of coking coal projected into a turbulent mass of non-coking material at a temperature at which the coal will soften and coke will in part become individual particles of coke and in part stick to other particles. There will gradually be an accumulation of more or less solid coke, the location of which in the retort will depend upon temperature as well as mixing conditions. I have found that such an accumulation will take place at or near the point at which the fresh coal is projected into the heated mass. Or, as in the turbulent mass in a fluid reactor, an agglomerate may begin to form at any position in the bed and grow in size until it becomes an obstruction to operation.

I have found that when I project a stream of fine sized coking coal, as by a screw conveyor, into a tumbling mass of heated coke or char fines in a revolving retort, while most of the coal particles are coked in the mass of hot non-coking material, some of the coal particles do not pass through the plastic state before coming in contact with metal parts of the retort, to which they adhere. The accumulations of porous coke on retort walls, at critical points in the retort as well as in the heated mass of inert, non-coking material in process, have greatly interfered with the efficient, economical operation of different processes for making a char from high volatile coking coal.

A fluid reactor, or a rotary kiln or retort containing heated, inert, non-coking material, and into which finely

divided raw coking coal is projected, may continue to function for a period, producing the desired solid product of char from the coking coal, but within hours, or days, depending upon conditions, the accumulations of solid coke in the bed or on the retort walls or parts will so reduce capacity, if it does not in fact shut down the unit, that the process ceases to be operable.

Two methods have been tried for eliminating this difficulty in carbonizing processes that have been described. One method is to destroy the coking property of the coal before introducing it into the process. Exposure to the atmosphere will reduce and eventually destroy the coking property of coal. Oxygen is absorbed and chemical changes take place in the coal substance that have that effect. At elevated temperatures the reduction in coking property is greatly accelerated. Subjecting finely divided coking coal to an atmosphere containing oxygen, as air, at temperatures below that at which hydrocarbon gases are given off and below the softening point of the coal substance is an accepted method of destroying coking property. Coking coal subjected to such treatment a sufficient length of time will behave as a non-coking coal in any of the carbonizing processes described.

I have discovered how to distil or carbonize high volatile coking coal without preheating and pre-treatment to destroy coking property. Coking coal, as described, can be heated to coking temperature by the sensible heat in other solid material. The mixing of the raw coal and heated coke may be accomplished in any suitable vessel or retort. I have found that the heat carrying solid material should contain sufficient sensible heat to raise the coal to and through the desired coking temperature.

As a background for a description of my improvement I shall first describe the usual apparatus for carbonizing finely divided raw coking coal by heat carried into the apparatus separately in preheated coke or other finely divided non-coking material and the difficulty that has been encountered in the carbonizing of coking coal by use of such apparatus. The apparatus is a closed, cylindrical, horizontal rotating steel retort provided at one end with means for receiving charge and at the other end with means for discharging volatile and solid products. In the retort is a bed occupying less than half the volume of the retort. The bed, which is of finely sized material, is maintained at the desired coking temperature by constant separate addition of heat carrying non-coking material at sufficiently higher temperature to supply, by its sensible heat, the heat necessary to raise the temperature of the incoming coal to the desired coking temperature. The two streams are delivered by screw conveyors through one end of the retort at or near a position central to the rotating retort.

Each of the coal and the non-coking material drops from the end of the conveyor delivering it into the retort to the top of the bed of hot material. The bed of material lies loosely in the rotating retort, its angle of repose depending upon the peripheral speed of the retort, but always greater than the angle when quiet. As the retort turns the upper portion of the loose material, and particularly the top layer of particles, falls away in the direction opposite to the rising slope and down grade toward the juncture of the top of the bed and the inner surface of the retort. The incoming streams of coal and heated bed material fall onto and become part of such top layer. In any short interval of time, as, for instance, ten seconds, thousands of coal particles ranging in size from dust of a few microns diameter to the largest size charged fall onto the top of the heated bed material. Some, the very smallest, are coked almost at once and become a part of the bed material; others slide down the inclined and moving top of the bed, are immersed in the tumbling mass and are coked. Other particles may slide to the lower edge of the bed at the moment they are plastic where they cling to the steel, gradually accumulating in a circular mass centering in the vertical plane of the discharge end of the coal feed screw. Under the conditions described, with the many possible variables as peripheral speed of retort shell, size of coal, rate of feed, temperature of bed, etc., all affecting the distribution and flow of particles of incipient coke, it is not possible to predict the rate of growth of the insulating layer of coke being deposited on the steel, but experience establishes that some coal will become coke in contact with the metal. This results in building up an accumulation of such extent as to clog the system and terminate the operation.

I eliminate the above described impediment to an otherwise operable and economic process. I accomplish that result by so designing and operating the retort and carrying out the process that the coal particles are heated through the plastic range and are coked while in or on the bed and before they reach the metal of the retort wall. I have discovered that this may be brought about by controlled mixing of the coal charge with preheated bed material prior to charging into the retort and by applying the heat to the coal in such manner and at such stages in the process that the heat required to be applied to the coal in the bed is at a minimum.

The time required to heat a particle of any coal is a function of the temperature applied and the size, that is, the volume, of the particle. The rate of heat transfer attainable for small particles 0.01" or less in diameter is very high, but I do not consider it economic to pulverize the coal for my retort to that degree of fineness. Normally, with the harder, high volatile coking coals, ¼" x 0 is considered in the industry to be fine sized. Heat is applied to the surfaces of the particles, and a particle ¼" in diameter has about four times the surface for heat absorption of a particle ⅛" in diameter. However the heat required for carbonizing a particle of ¼" in size is eight times that required for carbonizing a particle of ⅛" size. The advantage of the smaller size is thus apparent. Furthermore, coal pulverized to pass through a ⅛" mesh screen will have an average size much less than if pulverized to pass through a ¼" mesh screen. I have found that when carbonizing coal by a low temperature process in which the coal is distilled in motion a top size of ⅛" represents an economical size reduction and permits a satisfactory and desirable rate of heating.

In my process and apparatus I heat in two stages high volatile coking coal of a size to pass through a ⅛" mesh screen. I have found that not only is two-stage heating more economical, but the introduction of the coal to the rotating carbonizing retort at an elevated temperature reduces the quantity of heat required and consequently reduces the time required to carbonize the coal after it enters the carbonizing retort.

Coking coal begins to give off hydrocarbon vapor when heated above 650° F. and becomes plastic in the range from 750 to 800° F. Coals differ somewhat in this respect but the temperatures given are representative for coking coals. I have found that a highly coking coal, such as that from the Pittsburgh seam in Western Pennsylvania, can be heated to between 600 and 625° F. without appreciable loss of hydrocarbon vapor and without becoming soft or plastic. When heated to 700° F. or higher such coal becomes plastic and when heated to 900 to 950° F. it will yield a maximum percentage of hydrocarbon vapor—tar and non-condensible gas. In fact, this and other coking coals, if heated to such temperature that the coal becomes plastic, will become a high volatile, low temperature coke. The selection of a final maximum coking temperature thus depends upon the product desired.

My process is designed to preheat the coal in the first stage to as high a temperature as economic, but not to such temperature as will soften the coal, and then to complete the carbonization in the second stage. I shall demonstrate by illustration why such a two-stage process should be employed.

A normal coking coal to be charged to a carbonization process may be considered as containing from 4 to 6% water. The water must be vaporized and driven off before the coal can be heated above about 250° F. The heat required to vaporize the water and heat the coal substance to 600° F. is greater than is required to heat the same coal from 600° F. to carbonization temperature. For instance, 100 pounds of charge coal containing 5% water will require the following quantities of heat to heat it to 950° F. To raise the temperature of one pound of dry coal one degree F. requires 0.3 B. t. u. To evaporate one pound of water and increase the temperature of the water vapor about 250° F. requires about 1100 B. t. u.

100 lb. of coal charge with 5% water is:	
95 lb. coal to be heated from room temperature, 70° F., to 600° F. This requires $95 \times .3 \times (600-70)$ or	15,105 B. t. u.
5 lb. water to be evaporated at 1100 B. t. u. per lb. requires	5,500 B. t. u.
Total	20,605 B. t. u.

This is 206 B. t. u. for each pound of original coal feed.

To complete carbonization at 950° F. the coal must be heated from 600 to 950° F.

The heat required to raise 95 lb. of coal from 600 to 950° F. is

$$95 \times .3 \times (950-600) \text{ or } 9975 \text{ B. t. u.}$$

That is, to dry and heat the coal to 600° F. requires 206 B. t. u. per pound of original charge as compared with 100 B. t. u. to complete the carbonization to 950° F. When the coal is heated to 600° F. two-thirds of the work of heating has been accomplished outside the carbonizing retort, leaving but one-third to be done in that retort. The quantity of heat, 100 B. t. u. per pound, as given in this example will be substantially the same for all high volatile coking coals under the same conditions.

In my improved process and apparatus I may introduce the added increment of heat corresponding to the 100 B. t. u. per pound in the foregoing example simultaneously in two ways, and each way may serve two purposes, as will be described. The two ways are (1) by the sensible heat contained in preheated fine sized coke or char and (2) by heat transmitted through the steel shell of the revolving retort. Each of those methods of heating is known to those skilled in the art.

The dual purpose of each of the above mentioned ways of introducing the added increment of heat to complete the coking in the retort of coal previously heated to 600° F., more or less, will now be explained. The fine sized char introduced with the coal so dilutes the coking property of the coal that small sized coke is made, and not large pieces or masses. With the proper proportion of char in the retort the agglutinating property of the mixture is so weak that no agglomerates or masses of coke are formed, and the product is a mixture of the original char and of presently made coke particles. This method of modifying, controlling or, for all practical purposes, destroying, the coking property of coking coal is also known in the art. It is different from, and is to be distinguished from, the method of destroying coking property by oxidation as previously described.

I maintain the steel shell of the rotating retort at a substantial temperature, preferably 50° to 100° F. above the temperature of the material in the retort, for the dual purpose of introducing heat into the charge through the steel and preventing the accumulation of coke on the steel, particularly for the latter mentioned purpose. I have discovered that a porous, low density layer or deposit of coke will be deposited on the steel of a retort

when the temperature of the steel is less than that of a particle or particles of plastic coal that come in contact with that steel. A quantity of fine size high volatile coking coal placed in an externally heated revolving retort and heated to 800° F., more or less, will become plastic. Even though the temperature of this mass of plastic coal is not increased above 800° F. the mass will agglomerate or coalesce and become one or more large pieces of plastic material. If at any time after such agglomeration or coalescence has occurred the material is removed from the retort it will be found to be soft enough to be easily deformed by pressure. It will be still plastic and may be evolving gas and tar vapor. However, when the material is removed from the heat and allowed to cool it becomes a firm, solid piece of low temperature coke within a few minutes. The time and temperatures at which this occurs will vary depending upon the plastic ranges of the different coals.

Should the coal in the retort be heated continuously beyond 800° F., more or less, as described, to a temperature above the upper limit of the plastic range of that coal, the coke becomes solid pieces in the retort.

Advantage is taken of this discovery in my process and apparatus. The coking coal that enters my revolving carbonizing retort at 600° F., more or less, mixed with noncoking material at a higher temperature is heated to and through the plastic range and to such end temperature as may be desired by the heat contained in the noncoking material. A particle of the coal which while yet plastic comes into contact with steel at lower temperatures will be cooled and become rigid and attached to the steel. However, if the steel is at a higher temperature than the plastic particle of coal the latter will not be cooled and adhere to the metal but will be heated further until it becomes a rigid but loose piece.

As indicated above, I prefer to maintain the steel of the revolving retort at a temperature 50 to 100° F. above the temperature at which the coal is to be carbonized. Inside, the mass of loose material lies in contact with the steel shell over from one-third to less than one-half the periphery, sliding and tumbling as the retort revolves. The material in contact with the hotter steel presents a thin layer of material at a temperature above the average of the entire mass and thus protects the steel from becoming coated with a layer of coke. Should such a layer of coke be formed on the steel the coke, being an insulator, will be cooler than the steel and will therefore cool and condense more coke, thus building up a layer so thick that it interferes with operation and must be removed.

I shall now describe the mixing of the preheated coal and the preheated non-coking material prior to introduction into the retort. As has been stated, I prefer to heat fine sized high volatile coking coal preheated to 600° F., more or less, drive off volatile hydrocarbons to a predetermined degree and have a fine sized solid product. To accomplish this continuously in a revolving steel retort the accumulation of coke on the steel shell should be prevented, as above explained. Heating the 600° F. coal to and through its plastic range should be accomplished before the plastic coal particles reach the steel shell. The heat is largely supplied by the sensible heat in the noncoking material intimately mixed and simultaneously introduced with the coal. I have found that the heat supplying non-coking material and the preheated coal should be mixed prior to introduction into the carbonizing retort. When the heat carrying non-coking material is introduced separately from the coal, as by separate screw conveyors, the coal falls freely into the top of the tumbling mass in the retort, lies more or less on top and slides to the line of contact between the bed material and the steel, thereby affording ample opportunity for coke to form on and to adhere to the steel.

The mixing should be done in a mixing device so located and operated that the heat supplying non-coking

material, at substantially higher temperature than the coal charge, is thoroughly mixed with the coal before being projected into the revolving retort. I have found also that the length of time during which the two materials are in contact within the mixing screw is important. The time of contact should not be such that the coking coal becomes heated, plastic and sticky, for then the material will coalesce, agglomerate and stop the conveyor. I have found that the time during which the materials are in contact in the mixing screw should be one minute or less and that the materials should be thoroughly mixed in that time. Thus when the mixture is projected into the retort, the coal, already partly heated above its preliminary temperature of 600° F., more or less, does not fall freely onto the top of the bed and slide to the steel shell, but, pre-mixed with the heat carrying non-coking material, is carbonized in the bed.

I have also found that the peripheral speed of the revolving steel carbonizing retort is important in controlling the flow of incoming material when delivered to the top of the sloping, loose bed material as previously described. The greater the speed of rotation of the cylindrical retort, the greater the angle of repose of the bed material and the faster the movement down the slope of bed material. Since my purpose is to retain the coal charge in the bed until it is coked and prevent the coal from reaching the steel retort while plastic I minimize the flowing movement of top bed material by maintaining a peripheral speed of less than 50 feet per minute.

Other details, objects and advantages of the invention will become apparent as the following description of a present preferred embodiment of the invention and a present preferred method of practicing the same proceeds.

In the accompanying drawing I have shown a present preferred embodiment of the invention and have illustrated a present preferred method of practicing the same. The drawing is a diagram or flow sheet of one form of my apparatus and indicates how material is handled and treated therein.

A substantially horizontal retort is designated by reference numeral **12**, the retort being mounted for rotation about its central longitudinal axis. The retort is enclosed in an insulated outer shell **13** with annular space between shell **13** and retort **12** for passage of heating gases from furnace **14**, which gases are vented at **24**. The retort is rotated by any suitable means as known in the art.

Raw coal is contained in feed bin **1** and is measured and conveyed by feeder **2** into preheater **3**. Preheater **3** is a kiln inclined to the horizontal to convey the coal from the upper left hand feed end to the lower right hand discharge end, and is rotated about its central axis by any suitable means as known in the art. Burner **4** at the lower or discharge end of kiln **3** provides the hot gases for preheating the coal in the kiln and evaporating any water contained in the coal. The gases after traversing the length of kiln **3** are vented, with water vapor from the coal, at **22**. The coal, designated **25** in preheating kiln **3**, is discharged at **5** and through conduit **28** flows through measuring device **15** to mixing screw **11** where it meets hot distillation residue, the heat-carrying non-coking medium, from kiln **8**, which may be a duplicate of kiln **3**.

Mixing screw **11** receives preheated coal from kiln **3** and heat carrying non-coking medium from kiln **8** and feeds the mixed materials into carbonizing retort **12** at one end of the retort. Mixing screw **11** discharges the mixed materials onto granular bed **27** in rotating retort **12** where the coal is distilled and carbonized by the heat from the material from kiln **8** and by heat from furnace **14** conducted through the shell of carbonizing retort **12**. The hot products of combustion from furnace **14** do not contact the material inside retort **12** but pass around it through the annular space between retort **12** and outer shell **13** and are vented through **24**.

Volatile products from bed material **27** in retort **12** pass out through opening **30** in the discharge end of retort **12** and into dust box **16** and then through duct **17** to suitable condensing and collecting facilities. Solid product from retort **12** is carried out by screw conveyor **31** and dropped into sealed conduit **18**. Volatile products from retort are prevented from leaving with solid products by a seal of any suitable construction diagrammatically indicated at **32** in conduit **18**.

Solid product from **18** is divided, in part leaving the system as final product at **20** and in part recycled through conduit **21** to bin **6**, from which solid product, being distillation residue from the carbonizing retort, is measured and conveyed by feed screw **7** into heating kiln **8**. Kiln **8** is inclined to the horizontal and rotates about its longitudinal axis. It is heated internally by burner **9**, from which the products of combustion are vented at **23**. Distillation residue from carbonizing retort **12** is charged into kiln **8** at its upper end to form bed **26** as described. Bed **26** is heated by the combustion gases from burner **9**, and then is discharged at **10** and by conduit **29** passes to mixing screw **11** through measuring device **19**. At the ends of the carbonizing retort are suitable seals **33** and **34** through which conveyor **11**, conduit **28** and conveyor **29** enter retort **12**. Not shown are the standard trunnions and drive mechanisms for kilns **3** and **8** and retort **12**.

In the preferred operation of my carbonizing process as applied, for example, to high volatile coking coal, the retort bed **27** is first charged with previously carbonized granular residue and the temperature increased to the predetermined carbonizing temperature, normally between 850 and 1000° F., by heat from furnace **14**. At the same time other distillation residue is charged through bin **6** and feeder **7** to kiln **8**, where its temperature is increased to a temperature between 1000 and 1400° F. by heat from burner **9**. When the charge **26** in kiln **8** is at the predetermined temperature and charge **27** in retort **12** is at its predetermined temperature, the material from kiln **8** is charged into retort **12** through mixing feeder **11** with a regulated amount of finely divided coal that has been heated to 600° F., more or less, in kiln **3** by heat from burner **4**.

Two considerations determine the ratio of material **26** from kiln **8** to material **25** from kiln **3** as charged to mixing screw **11** and hence into carbonizing retort **12**. The lower limit is determined by the proportion of previously distilled, inert, non-coking material **26** required to so dilute the coking coal **25** that the finely divided coal does not agglomerate into large pieces or masses. This ratio, for highly coking coal as from the Pittsburgh seam is 3 or more of non-coking material to 1 of coking coal. A lesser ratio may result in the formation of agglomerated masses or lumps or in filling the retort with a more or less solid mass of coke. With weakly coking coals, such as from certain beds in Southern Illinois, the ratio may be as low as one to one.

The second consideration is that the bed material from kiln **8**, the heat carrying, non-coking material, must supply to the carbonizer retort **12** the major portion of the heat required to distil the coal from kiln **3**. The quantity of heat supplied by the material **26** from kiln **8** depends upon the quantity charged and its temperature, both of which variables may be regulated.

For instance, with 95 lbs. of coal from kiln **3**, dried and heated to 600° F., there will be required to complete the distillation to 950° F. 9975 B. t. u., as previously stated. To control the operation in retort **12** there should be three times as much heat carrying, non-coking material from kiln **8** as coal, or three times 95 or 285 lbs. This 285 lbs. must therefore deliver 9975 B. t. u. before decreasing in temperature to the predetermined distillation temperature of 950° F. As each pound is assumed to have a heat capacity of .3 B. t. u., the 285 lbs. contain .3 times 285 or 85.5 B. t. u. for each degree, and the 285 lbs. must be

heated (9975 divided by 85.5) 116° F. above 950° F., or to 1066° F., as the material enters the mixing screw **11**.

In the foregoing description of the operation of my process the heat from burner **14** which passes through the steel retort **12** into the carbonizing bed **27** has not been taken into account. I have already stated that the purpose of introducing heat through the rotating steel retort is a part of the process control to prevent coke adhering to the inside of the steel retort. I propose to so adjust the temperature of the combustion gases from furnace **14** that the rotating steel retort is maintained from 50 to 100° F. above the average bed temperature within the retort. I have found that by control of the heat released in furnace **14** the quantity of heat transmitted to the bed material in the retort through the steel may be made to vary from nothing up to 1500 B. t. u. or more per square foot of steel area per hour. For instance, in a 10-foot diameter retort in which bed material occupies 25 cu. ft. per foot of length the heat transferred may range from 5 to 25 B. t. u. per pound of bed material in half an hour residence. Thus, although the quantity of heat transferred in this manner is relatively small under the conditions I have described, the effect of inhibiting the adherence of coke to the steel is important.

Although the solid and the volatile products may be withdrawn through one opening in the discharge end of the carbonizing retort I prefer to withdraw them through separate openings. I have found that less dust will be contained in the vapors when they are withdrawn separately than when they are carried out in the conveyor that discharges the solids. Dust contained in the vapors is undesirable as the dust appears in the condensates of tar and water, contaminating the tar.

The solid product produced as the result of the application of my process and apparatus to high volatile Pittsburgh seam coal as described above is a loose granular solid within substantially the same size range as the coal charged to the process. It is friable, cellular and non-agglomerated in contrast to that produced by other methods from coking coals. If properly controlled, as has been described, with respect to the ratio of preheated material to coking coal charged, the product is substantially free of lumps of coke. Since a large part of the solid product has passed through the preheating zone that part has a lower volatile content than the part which has passed only through the retort. The volatile content of the latter mentioned part is determined by the average temperature within the retort. The difference in volatile content depends on the temperature difference between the preheating zone and the distillation zone and may accordingly be varied if desired.

My process and apparatus may be applied to any distillable coking carbonaceous solid including coking coal, coking oil shale and the like. In the application to distillable coking carbonaceous solids other than high volatile Pittsburgh seam coal the preferred proportions of material being treated and distillation residue charged to the retort may be other than those specified in the above example depending on the particular coking quality of the material being treated but may be readily determined.

While I have shown and described a present preferred embodiment of the invention and a present preferred method of practicing the same it is to be distinctly understood that the invention is not limited thereto but may otherwise be variously embodied and practiced within the scope of the following claims.

I claim:

1. A continuous process of low temperature carbonization of carbonaceous material which softens during the process comprising forming an admixture of said material with heat carrying recirculated char, forming a bed of mixed carbonaceous material being carbonized and heat carrying recirculated char and tumbling said bed, continuously feeding onto an end of the tumbling bed said admixture of carbonaceous material being carbonized and heat carrying recirculated char in which the carbonaceous material being carbonized is at a temperature below its softening point, supporting the tumbling bed on a support and through the support supplying additional heat to the bed, the total heat supplied to the carbonaceous material being carbonized by the heat carrying recirculated char and through the support heating such carbonaceous material to and through its plastic range before it reaches the support, advancing the material constituting the bed from the first mentioned end toward the opposite end of the bed, separating the volatile products from the bed and withdrawing the solid residue or char from the second mentioned end of the bed at about the same rate as the rate at which the mixed material is fed onto the first mentioned end of the bed.

2. A continuous process of low temperature carbonization of carbonaceous material which softens during the process comprising forming an admixture of said material with heat carrying recirculated char, forming a bed of mixed carbonaceous material being carbonized and heat carrying recirculated char and tumbling said bed, continuously feeding onto an end of the tumbling bed said admixture of carbonaceous material being carbonized and heat carrying recirculated char in which the carbonaceous material being carbonized is at a temperature below its softening point, supporting the tumbling bed on a support and through the support supplying additional heat to the bed, the total heat supplied to the carbonaceous material being carbonized by the heat carrying recirculated char and through the support heating such carbonaceous material to and through its plastic range before it reaches the support, advancing the material constituting the bed from the first mentioned end toward the opposite end of the bed, separating the volatile products from the bed, withdrawing the solid residue or char from the second mentioned end of the bed at about the same rate as the rate at which the mixed material is fed onto the first mentioned end of the bed, further heating part of the withdrawn char and recirculating such part of the withdrawn char as the heat carrying non-coking granular material in continuation of the process.

3. A continuous process of low temperature carbonization of carbonaceous material which softens during the process comprising forming an admixture of said material with heat carrying recirculated char, forming a bed of mixed carbonaceous material being carbonized and heat carrying recirculated char and tumbling said bed in a rotating retort, continuously feeding onto an end of the tumbling bed in the rotating retort said admixture of carbonaceous material being carbonized and heat carrying recirculated char in which the carbonaceous material being carbonized is at a temperature below its softening point, maintaining the shell of the retort at a temperature substantially higher than the temperature of the material constituting the bed by applying heat externally to the retort, the total heat supplied to the carbonaceous material being carbonized by the heat carrying recirculated char and through the retort heating such carbonaceous material to and through its plastic range before it reaches the shell of the retort, advancing the material constituting the bed longitudinally of the retort from the first mentioned end toward the opposite end of the bed, removing the volatile products from the retort and withdrawing the solid residue or char from the retort at the second mentioned end of the bed.

4. A continuous process of low temperature carbonization of carbonaceous material which softens during the process comprising forming an admixture of said material with heat carrying recirculated char, forming a bed of mixed carbonaceous material being carbonized and heat carrying recirculated char and tumbling said bed in a rotating retort, continuously feeding onto an end of the tumbling bed in the rotating retort said admixture of carbonaceous material being carbonized and heat carrying recirculated char in which the carbonaceous material

being carbonized is at a temperature below its softening point and the heat carrying recirculated char is at a temperature of the order of 1000–1400° F., the quantities of carbonaceous material being carbonized and heat carrying recirculated char in the bed being proportioned so that the average temperature of the material constituting the bed in the retort is of the order of 800–1000° F., maintaining the shell of the retort at a temperature substantially higher than the temperature of the material constituting the bed by applying heat externally to the retort, the total heat supplied to the carbonaceous material being carbonized by the heat carrying recirculated char and through the retort heating such carbonaceous material to and through its plastic range before it reaches the shell of the retort, advancing the material constituting the bed longitudinally of the retort from the first mentioned end toward the opposite end of the bed, removing the volatile products from the retort and withdrawing the solid residue or char from the retort at the second mentioned end of the bed.

5. A continuous process of low temperature carbonization of carbaceous material which softens during the process comprising forming an admixture of said material with heat carrying recirculated char, forming a bed of mixed carbonaceous material being carbonized and heat carrying recirculated char and tumbling said bed in a rotating retort, continuously feeding onto an end of the tumbling bed in the rotating retort said admxiture of carbonaceous material being carbonized and heat carrying recirculated char in which the carbonaceous material being carbonized is at a temperature below its softening point and the heat carrying recirculated char is at a temperature of the order of 1000–1400° F., the quantities of carbonaceous material being carbonized and heat carrying recirculated char in the bed being proportioned so that the average temperature of the material constituting the bed in the retort is of the order of 800–1000° F., rotating the retort at a peripheral speed of less than fifty feet per minute, maintaining the shell of the retort at a temperature substantially higher than the temperature of the material constituting the bed by applying heat externally to the retort, the total heat supplied to the carbonaceous material being carbonized by the heat carrying recirculated char and through the retort heating such carbonaceous material to and through its plastic range before it reaches the shell of the retort, advancing the material constituting the bed longitudinally of the retort from the first mentioned end toward the opposite end of the bed, removing the volatile products from the retort and withdrawing the solid residue or char from the retort at the second mentioned end of the bed.

6. A continuous process of low temperature carbonization of carbonaceous material which softens during the process comprising forming an admixture of said material with heat carrying recirculated char, forming a bed of mixed carbonaceous material being carbonized and heat carrying recirculated char and tumbling said bed in a rotating retort, continuously feeding onto an end of the tumbling bed in the rotating retort said admixture of carbonaceous material being carbonized and heat carrying recirculated char in which the carbonaceous material being carbonized is at a temperature below its softening point and the heat carrying recirculated char is at a temperature of the order of 1000–1400° F., the quantities of carbonaceous material being carbonized and heat carrying non-coking granular material in the bed being proportioned so that the average temperature of the material constituting the bed in the retort is of the order of 800–1000° F., maintaining the shell of the retort at a temperature of the order of 50–100° F. higher than the temperature of the material constituting the bed by applying heat externally to the retort, the total heat supplied to the carbonaceous material being carbonized by the heat carrying recirculated char and through the retort heating such carbonaceous material to and through its plastic range before it reaches the shell of the retort, advancing the material constituting the bed longitudinally of the retort from the first mentioned end toward the opposite end of the bed, removing the volatile products from the retort and withdrawing the solid residue or char from the retort at the second mentioned end of the bed.

7. A continuous process of low temperature carbonization of carbonaceous material which softens during the process comprising forming an admixture of said material with heat carrying recirculated char, forming a bed of mixed carbonaceous material being carbonized and heat carrying recirculated char and tumbling said bed in a rotating retort, continuously feeding onto an end of the tumbling bed in the rotating retort said admixture of carbonaceous material being carbonized and heat carrying recirculated char in which the carbonaceous material being carbonized is at a temperature below its softening point and the heat carrying recirculated char is at a temperature of the order of 1000–1400° F., the ratio by weight of carbonaceous material being carbonized to heat carrying recirculated char in the bed being less than 1:3 when strongly coking carbonaceous material is being carbonized and more when weakly coking carbonaceous material is being carbonized, the average temperature of the material constituting the bed in the retort being of the order of 800–1000° F., maintaining the shell of the retort at a temperature substantially higher than the temperature of the material constituting the bed by applying heat externally to the retort, the total heat supplied to the carbonaceous material being carbonized by the heat carrying recirculated char and through the retort heating such carbonaceous material to and through its plastic range before it reaches the shell of the retort, advancing the material constituting the bed longitudinally of the retort from the first mentioned end toward the opposite end of the bed, removing the volatile products from the retort and withdrawing the solid residue or char from the retort at the second mentioned end of the bed.

References Cited in the file of this patent

UNITED STATES PATENTS

1,899,887	Thiele	Feb. 28, 1933
2,080,946	Lesher	May 18, 1937
2,287,437	Lesher	June 23, 1942
2,622,059	Lesher	Dec. 16, 1952