United States Patent

Luderer et al.

[15] **3,691,991**

[45] **Sept. 19, 1972**

[54] **APPARATUS FOR SPRAY-COATING COMPONENTS**

[72] Inventors: **Manfred H. Luderer**, Weiller Zum Stein; **Anton Ettenhofer**, Winnenden, both of Germany

[73] Assignee: **Atlas Copco Aktiebolog**, Nacka, Sweden

[22] Filed: **Nov. 3, 1971**

[21] Appl. No.: **195,270**

Related U.S. Application Data

[62] Division of Ser. No. 819,216, April 25, 1969, Pat. No. 3,637,135.

[30] **Foreign Application Priority Data**

Apr. 26, 1968 Germany.....P 17 71 263.9
Jan. 14, 1969 Germany.....G 69 01 158.1
Mar. 27, 1969 Germany.....P 19 15 651.1

[52] **U.S. Cl.** **118/629**, 117/17, 118/621, 118/627, 239/15

[51] **Int. Cl.**.....**B05c 5/02**

[58] **Field of Search**.....118/621, 627, 629, 640; 117/17.5; 239/3, 15

[56] **References Cited**

UNITED STATES PATENTS

2,254,016	8/1941	Melton et al.	91/18
2,748,018	5/1956	Miller	117/17
2,889,805	6/1959	Freeder	118/627
3,327,948	6/1967	Gignoux	239/3
3,498,540	3/1970	Adams	239/3
3,551,178	12/1970	Chmelar	118/640 X

FOREIGN PATENTS OR APPLICATIONS

517,728	3/1953	Belgium	117/17 X
514,988	11/1952	Belgium	118/629 X
473,159	12/1950	Italy	118/621 X

Primary Examiner—Mervin Stein
Assistant Examiner—Leo Millstein
Attorney—John J. McGlew

[57] **ABSTRACT**

An apparatus for spray-coating components or workpieces with a dry material, such as powder, or with a wet material, such as paint, includes a removable and replaceable supply container for the coating material. When the container is mounted in the apparatus, an agitator therein is connected to an air supply to agitate the material in the container. The material is supplied from the container to a feeding trough through a regulatable discharge opening, the trough being vibrated parallel to the direction of movement of the material therealong and the support for the container being vibrated vertically. The trough delivers the material to an injector connected to a source of compressed air with the mixture of compressed air and material being directed through a closed conduit or the like to a spray-gun having high voltage electrodes at its outlet or discharge end. A control panel is provided with controls for selecting the voltage and the polarity of the electrodes at the spray-gun outlet, and for regulating the vibration effect and the supply of air to the apparatus. The electrical operation is effected under the control of air pressure operated switches to which air is supplied responsive to operation of air supply control members.

19 Claims, 9 Drawing Figures

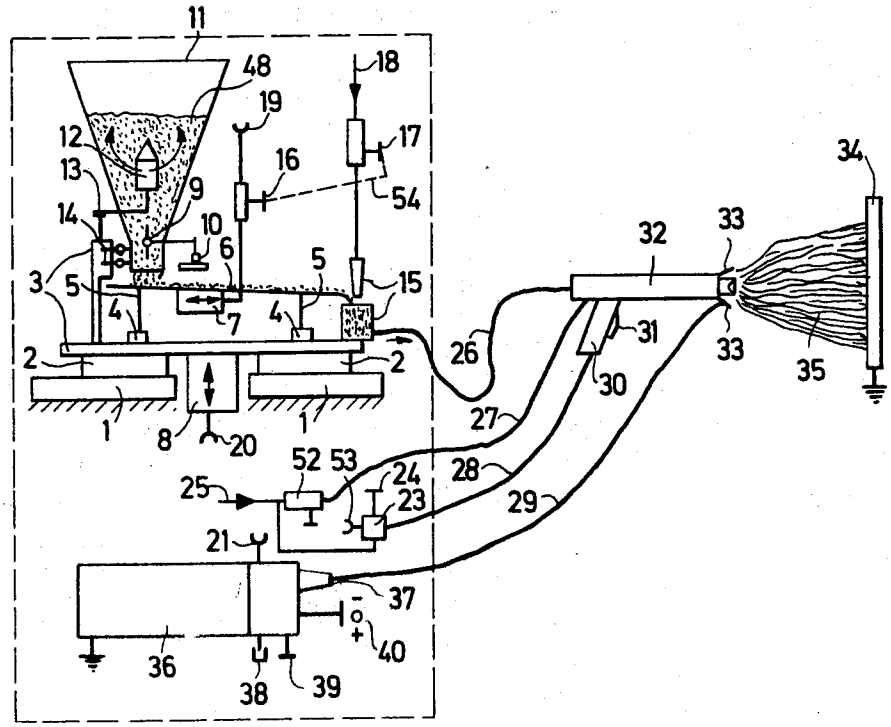

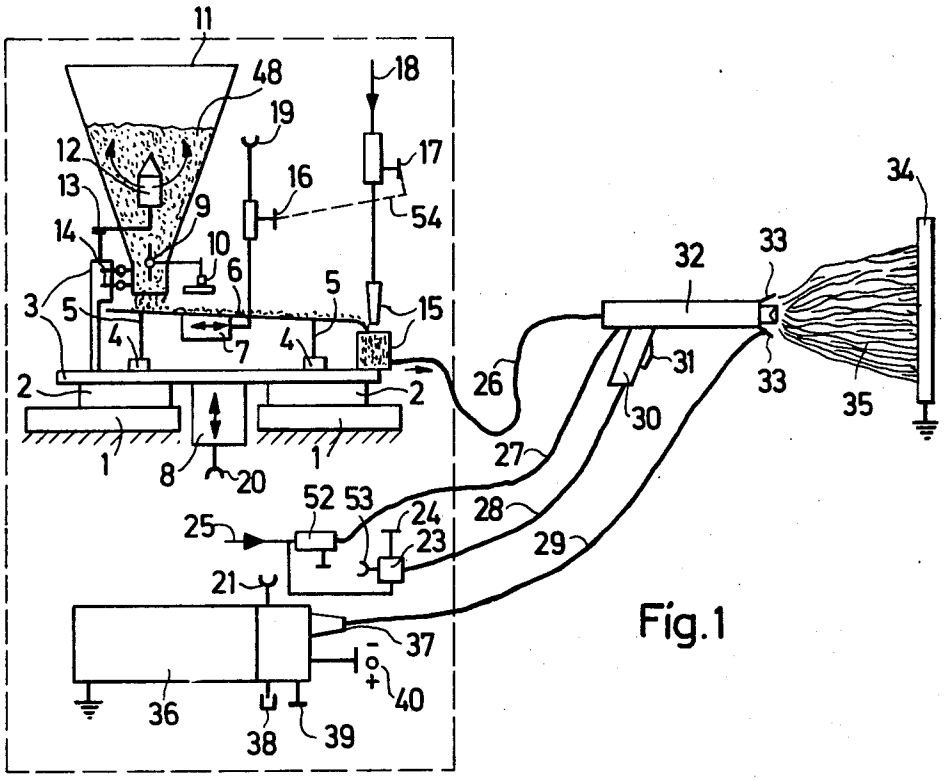

Fig.1

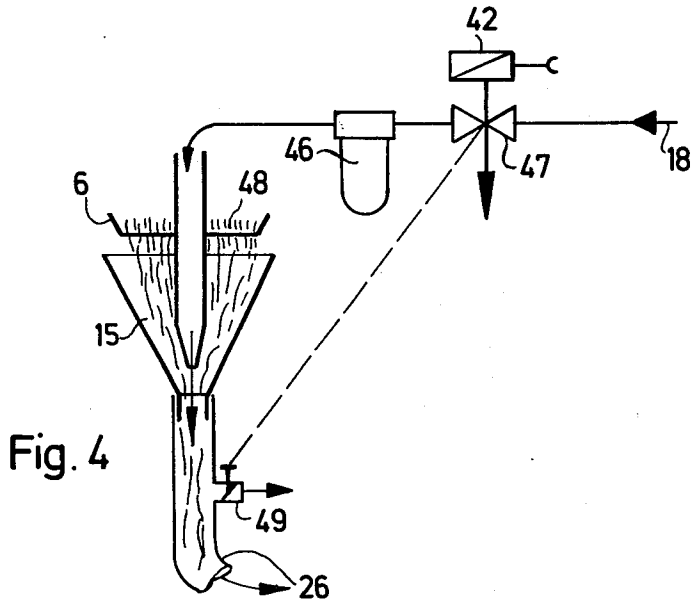

Fig. 4

INVENTORS
MANFRED H. LUDERER
ANTON ETTENHOFER
BY John J. McGlew
ATTORNEY

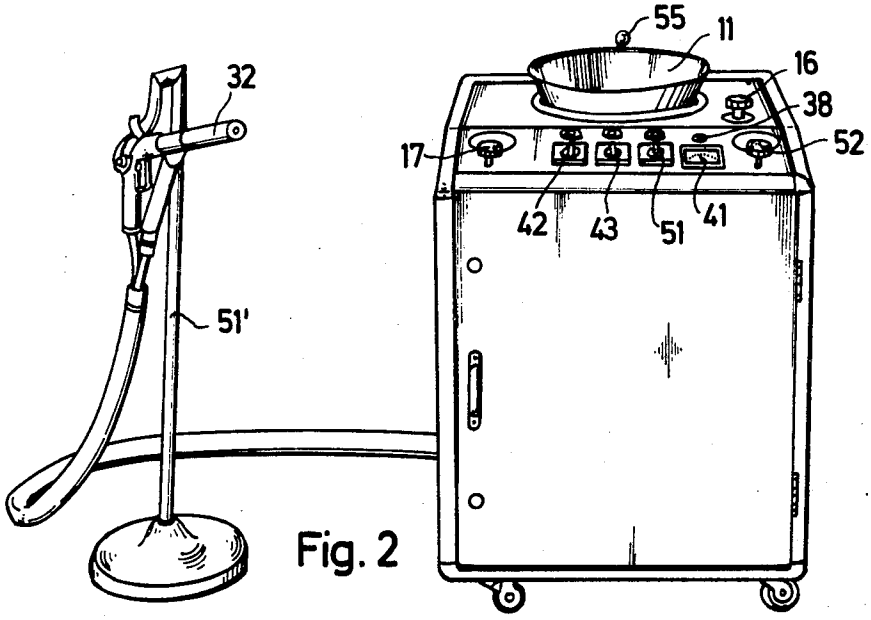

Fig. 2

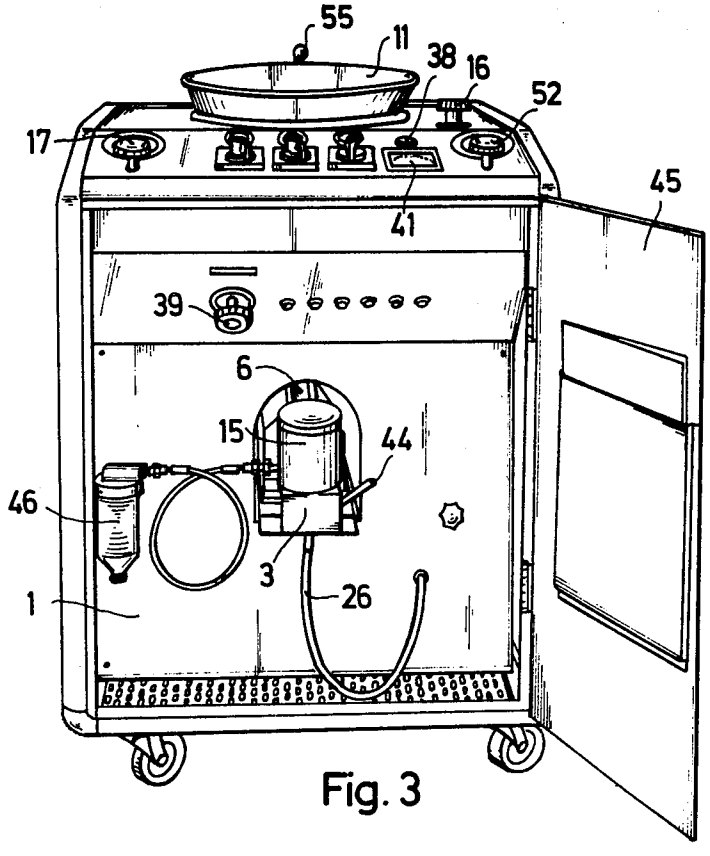

Fig. 3

INVENTORS
MANFRED H. LUDERER
ANTON ETTENHOFER
BY John J. McGlew
ATTORNEY

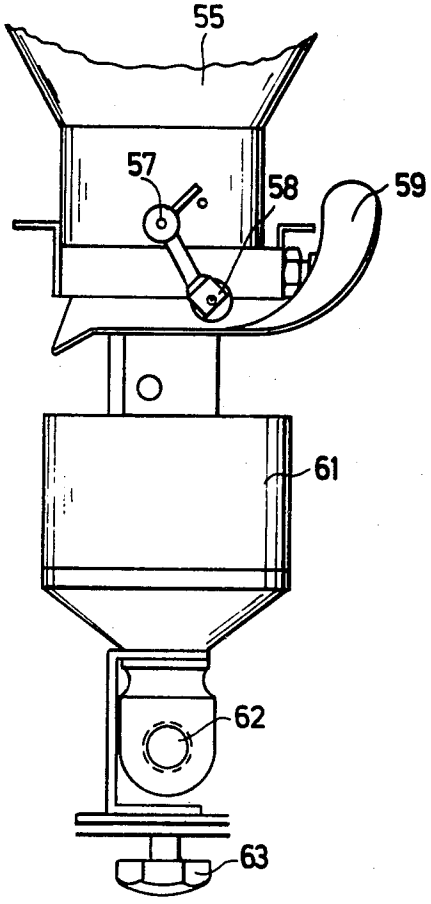

Fig. 5

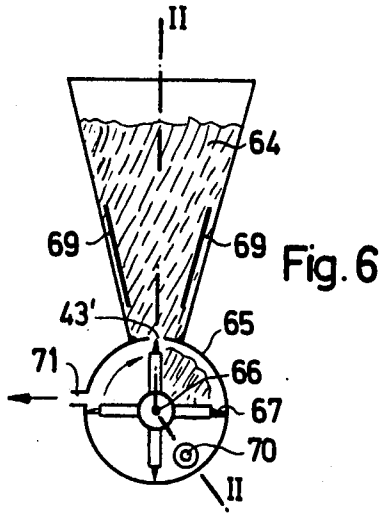

Fig. 6

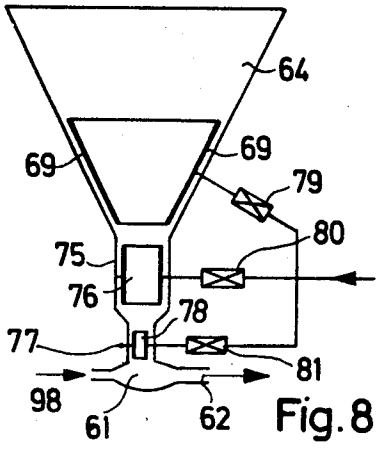

Fig. 8

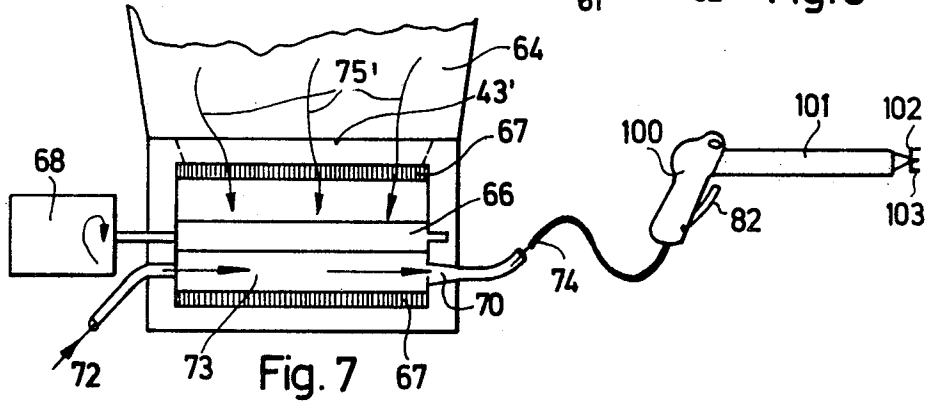

Fig. 7

INVENTORS
MANFRED H. LUDERER
ANTON ETTENHOFER
BY John J. McGlew
ATTORNEY

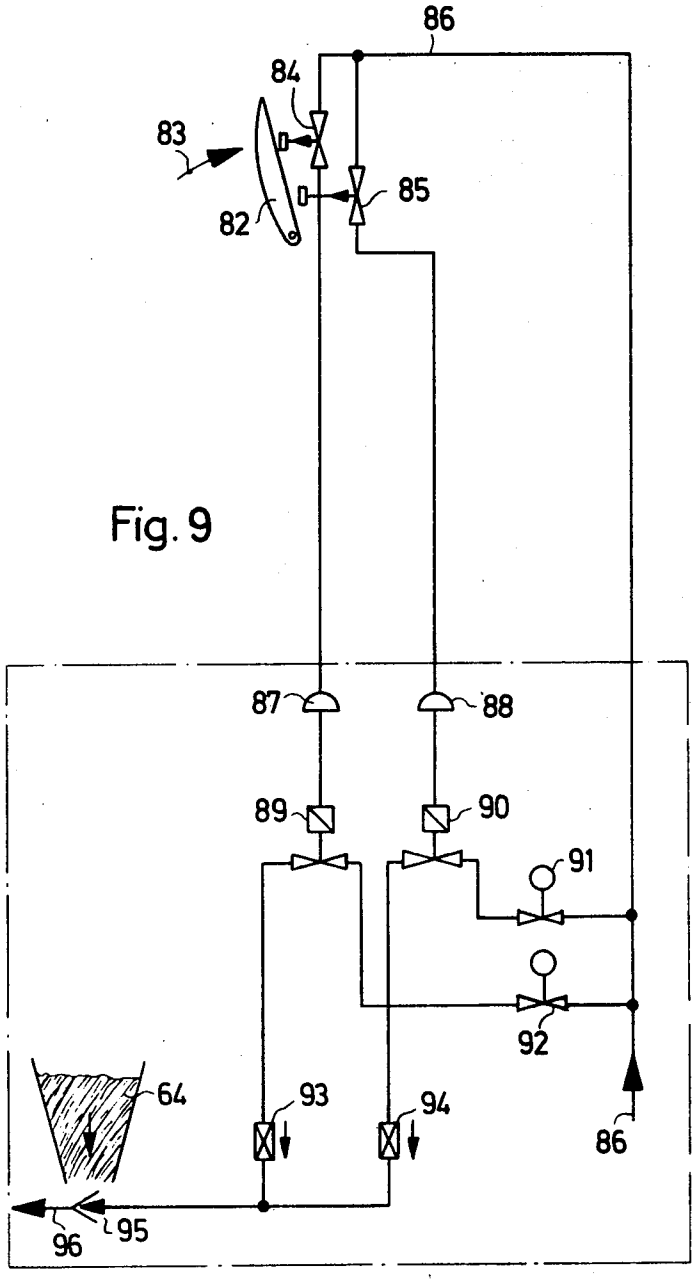

Fig. 9

INVENTORS
MANFRED H. LUDERER
ANTON ETTENHOFER
BY John J. McGlew
ATTORNEY

APPARATUS FOR SPRAY-COATING COMPONENTS

CROSS REFERENCE TO RELATED APPLICATION

This application is a division of application Ser. No. 819,216, filed Apr. 25, 1969, and now U.S. Pat. No. 3,637,135, issued in Jan. 25, 1972.

FIELD OF THE INVENTION

This invention is directed to the spray-coating of workpieces and, more particularly, to a novel, improved, simplified and versatile apparatus for coating workpieces with either powdered or liquid material.

SUMMARY OF THE INVENTION

The apparatus of the invention primarily is adapted to apply powder to components but, by quick conversion, it can be used equally well for applying paint by the wet process, in which airless paint-spraying or air-operated paint-spraying may be used. As compared to known prior art apparatus for coating components, the invention apparatus utilizes novel features and combinations of these novel features, and includes novel means for feeding the coating material, novel setting and switching-in means, and novel change-over and cleaning means. The individual components differ from known apparatus in that they provide for much faster change-over from one color to another, and also for better cleaning of the apparatus.

In accordance with the invention, the apparatus includes a novel mount for a powder funnel and associated parts, the mount for the powder funnel, that for the feeding trough, and that for the air injector being combined to form a single compact unit. This unit is so designed that a support chassis, acted upon by a vertical vibrator, has directly coupled thereto a supporting carrier for the powder funnel and the injector, while the feeding trough, which is acted upon along its longitudinal center line by a horizontal vibrator, is coupled to the support chassis through rubber cushions, with the compact unit being connected to the appliance chassis also through rubber cushions. The mounting arrangement of the invention has the great advantage that, on the one hand, a horizontal action on the powder occurs in the feeding trough and, on the other hand, a vertical motion in the powder funnel and in the direction of feeding the material or powder toward the feeding trough, and in the injector in the direction toward the hose connection to the gun, is provided. The compact mounting is one of the most important features of the apparatus.

In addition, the apparatus embodying the invention is so designed that the powder funnel is exchangeable, and that it is provided with means which automatically open and close the powder outlet responsive to mounting and removal of the powder funnel, respectively, thus eliminating loss of powder. At the same time, this means provides for easy removal of the powder funnel from the apparatus. The funnel can be filled, outside the apparatus, or a different powder funnel, with a different powder, can be mounted in the apparatus.

Individual catches are provided for cooperation with the powder funnel, and permit adjustment of the vertical distance between the funnel outlet and the feeding trough, so that a preselection of the outlet opening with

respect to the feeding trough can be easily effected. This exchangeability of the powder funnel is an essential feature of the apparatus, as it is possible, with one manipulation, to remove the powder funnel, for example, for refilling, so that contamination of the entire plant or apparatus by powder is prevented.

When the powder funnel is being mounted in the apparatus, the powder outlet is automatically opened, this being effected, for example, by dogs or rollers running against cams. It is preferable to shut off the powder in the funnel by means of a butterfly valve or other valve elements, such as slide valve elements. Furthermore, when attachment of the funnel has been effected, at the same time an air connection is completed for supplying air to air injection bodies in the powder funnel.

Adjustment of the powder quantity fed to the gun is further possible by adjusting the supply voltage to the horizontal vibrator of the feeding trough. By so doing, two adjusting means are provided regulating the quantity of powder fed to the gun. The adjusting means for the supply voltage of the horizontal vibrator and for the air valve for the injector can be directly coupled or can be coupled through gear members.

Thus, a further simplification of the adjustment of the apparatus is obtained. Coupling can be effected by means of a through shaft or, alternatively, machine elements, such as cams, dogs, differentials, or the like can be arranged between the operating shafts. In this way, functionally different operating relations between the shafts can be realized.

The apparatus according to the invention permits switching over of the high voltage supply by a control switch at a control desk, switching to positive-zero-negative being possible, so that the high voltage potential at the electrode of the gun can have a selected polarity. The change-over switch for the polarity is arranged at the high voltage supply, and proceeds through various cascade stages, the polarity of the respective switching elements being changed in each stage. In the mid-position "zero" of the change-over switch, the capacitors are discharged.

A further improvement of the invention apparatus over the prior art is that, when switching off the air supply for the injector, at least one vent valve is actuated at the same time to reduce the pressure in the direction toward the gun. This has the great advantage that, immediately after switching off, discharge of a powder gas mixture at the front of the gun is eliminated and there is no afterflow.

The vent valve can be installed between the shut-off valve and the injector. However, it is also possible to install a further vent valve between the injector and the gun, and also to install two vent valves, one at each of the above-mentioned locations. The apparatus of the invention is switched on by actuating a compressed air switch seated in the gun and actuating, in the apparatus, a compressed air operated switch which controls the cascade, the vibrators and the compressed air valve for the injector. By virtue of this, it is possible to use a gun which needs no lines or conductors other than the high voltage cable.

A special advantage of the invention apparatus is that the injector is arranged in a quick-action clamping holder on the support chassis, this holder, for example, permitting removal of the injector after unlocking a

lever. This provides for quick cleaning of the injector and also for quick change-over of the apparatus, for example, from one color to another.

A special test key in the control panel permits, on the one hand, switching off the high voltage from the gun and discharge of the electrode at the gun. On the other hand, however, regulation of the high voltage for the electrostatic field can be obtained at a KV-calibrated indicating instrument in the primary circuit. Adjustment is effected by an adjusting regulator, for example, a regulating transformer in the primary circuit. After releasing the test key, the high voltage value set is applied to the electrodes of the gun.

The apparatus is further so designed that, on the one hand, the powder current, which is adjustable at the control desk, is acted upon by air in the injector and, on the other hand, an additional air line supplies accelerating air to the gun, with the accelerating air being also adjustable at the control desk. By this arrangement, easy and reliable breaking up of the powder in the injector can be obtained and, at the same time, there can be obtained also sufficient acceleration of the broken up powder current at the gun, so that the powder current impinges on the component or workpiece with sufficient acceleration energy.

In a modification of the apparatus of the invention, connections and valves are arranged on the apparatus permitting, alternatively, connection of wet spraying devices, airless devices, or air-operated devices, in such a way that, in the case of airless operation, a respective compressed air tank pressure converter, with a respective airless gun, can be applied, or a compressed air operated gun can be applied, in such a way that also the high voltage connection for additional electrostatic spraying can be used fully in the apparatus. This universal applicability provides the apparatus embodying the invention with a further field of service and, for smaller enterprises, the possibility of operating according to different processes. This has the advantage that the apparatus attains a much greater performance and has a longer operating time as the various possibilities eliminate down times.

Basically, the apparatus embodying the invention provides, with the influence on the power current in the various active components, further very important combinations results which are important in using the plant. These include influencing the powder quantity by adjustment of the distance between the powder funnel and the feeding trough, and by adjusting the voltage at the horizontal vibrator of the feeding trough. Also, premixing and feeding to the gun is effected by adjusting the air current at the injector. The degree of atomization and acceleration at the gun outlet is adjustable by the accelerating air current supplied directly to the gun, and by adjustment of a high voltage field to a voltage of a selected polarity between the electrodes and the workpieces being coated. A cloud shape of the powder discharged from the gun is provided by a baffle and guide bodies in front of the gun discharge outlet. The combination of various features for influencing the powder current in the various active components of the apparatus is a very important characteristic of the apparatus, and involves a combination of features not found in any prior art apparatus for coating workpieces.

The provision for reduction of pressure when switching off the powder current of the gun, in the line between the control valve of the compressed air and the injector and the gun, provides the great advantage that, when switching off, afterflow of powder does not occur.

As a further feature of the apparatus, at least part of those walls or surfaces coming in contact with the powder are provided with fluidizing bodies. By the term "fluidizing bodies", as used herein, is to be understood sintered bodies which are porous and within the powder containers or passages. Air is supplied from the exterior into the sintering bodies and directed, through the sintering bodies, on a larger surface into the powder. For example, a ball-shaped fluidizing body may be provided in the powder funnel for effecting circulation of the powder in the funnel. The air supply for groups of fluidizing bodies associated with each other may be separately adjustable.

In a further modification of the invention, a cellular wheel lock, with several chambers, is arranged directly beneath the powder funnel in such a way that those chambers facing the funnel collect the powder from the funnel and the delivery air acts upon at least one lower chamber in an axial direction, subject to the condition that, in the wall side, an injector is arranged in the outgoing direction and to which the feed hose to the powder gun is connected. This has the advantage of providing apparatus of a relatively simple design.

In accordance with the invention, the apparatus can be so designed that all vibrating equipment, which can be switched off, as well as the injector, can be mounted directly underneath the power funnel and, in this way, an apparatus is provided which is suitable for spraying relatively specifically light and specifically heavy powders, such as frit or ceramic powder.

At least part of those walls contacted by the powder are coated with plastic materials of the group of the polytetrafluoroethylenes, or plastic materials of the group of the copolymers from tetrafluoroethylene, hexafluoropropylene, or the like. Furthermore, these walls can be made solely of these plastic materials. It is also possible to use, generally, fluorinated or siliconated plastic materials, or both, for this purpose.

As a further feature of the invention, the trigger of the gun for the discharge of the powder-air mixture, in the range of the first portion of a path of movement, is designed so that it actuates a valve for a smaller quantity and, in the latter part of the range of movement, a valve for full quantity. In this way, the powder-air current can be regulated and thus, with the smaller quantity, for example, grooves, pipe sections, protuberances, etc., requiring a smaller quantity can be treated and, on the other hand, when fully depressing the trigger, large surfaces are immediately coated with powder.

It is, however, also possible that the trigger actuates a valve for continuously, functionally, or both, increasing powder-air delivery, providing the advantage that a powder quantity continuously increasing in quantity, or increasing according to a certain function, can be controlled by the operator.

Separate lines may lead from the apparatus to the valves in the gun, these lines being separately adjustable in the apparatus, so that the gun can be adapted easily to various situations without unnecessary spraying of powder.

For an understanding of the principles of the invention, reference is made to the following description of typical embodiments thereof as illustrated in the accompanying drawing.

BRIEF DESCRIPTION OF THE DRAWING

In the drawing:

FIG. 1 is a generally diagrammatic view illustrating the overall apparatus, for explaining the principle of operation;

FIG. 2 is a perspective view of a practical embodiment of the apparatus;

FIG. 3 is a view, similar to FIG. 2, of a part of the apparatus and with a front section open to illustrate the injector;

FIG. 4 is a diagrammatic illustration of the circuit interconnecting the valves of the venting appliance;

FIG. 5 is a partial side elevation view of an embodiment of the apparatus in which the injector is arranged directly beneath the powder funnel;

FIG. 6 is a vertical sectional view illustrating an embodiment of the apparatus with a cellular-wheel lock arranged beneath the powder funnel;

FIG. 7 is a partial and somewhat diagrammatic sectional view taken along the line II—II of FIG. 6;

FIG. 8 is a diagrammatic view, in line representation, of an embodiment of the invention and illustrating an arrangement of fluidizing bodies; and

FIG. 9 is a schematic air and electric circuit diagram illustrating the regulation of the powder-air mixture at the apparatus and at the gun.

DESCRIPTION OF THE PREFERRED EMBODIMENTS

Referring first to FIG. 1, rubber cushions 2 mounting a support chassis 3 are mounted on an appliance chassis 1. Rubber cushions 4 on support chassis 3 carry, through supports 5, a feeding trough 6. An injector 15 and a funnel 11, containing powder 48, are mounted on support chassis 3. Funnel 11 is seated on chassis 3 and, through catches 14, only two of which are shown, by way of example, can be adjusted in height, as desired, relative to feeding trough 6.

In powder funnel 11, there is arranged an air-injection body 12 designed as an annular body, for example, and which is automatically coupled to an air supply line at the connection 13 when funnel 11 is being mounted on chassis 3. The arrows in powder funnel 11 indicate the direction of circulation of powder 48 in a manner such that the powder is broken up in funnel 11.

A butterfly valve 9 is provided in powder funnel 11 and, through coupling members, is connected to a roller 10 and a dog, for example, which open valve 9 when funnel 11 is mounted from above, and close valve 9 automatically, when funnel 11 is pulled upwardly for removal from the apparatus, so that no powder will then flow out of funnel 11.

Powder 48 flows from funnel 11 onto feeding trough 6, which is slightly inclined toward injector 15. A vertical vibrator 8, of known design, is arranged on support chassis 3 and supplied with current through a connection 20. Vibrator 8 vibrates support chassis 3, together with funnel 11, in a vertical direction. At the same time, trough 6 is also vibrated in a vertical direction due to the fact that vibrator 8 is coupled to trough 6 through chassis 3 and rubber cushions 4. A horizontal vibrator 7 is arranged at feeding trough 8 and supplied with current through a connection 19. An adjusting device 16 is provided in the supply line for adjusting or setting the voltage for vibrator 7.

Injector 15 is supplied with compressed air through a line 18, with the quantity of compressed air being regulated by an adjusting device 17. In injector 15, the compressed air accelerates the powder received in the injector from trough 6 and carries it through holes or conduit 26 to spray-gun 32. Spray-gun 32 is additionally supplied with accelerating air from a line 25, and the supply of accelerating air can be set by an adjusting device 52. From adjusting device 52, the accelerating air flows to spray-gun 32 through a line or conduit 27.

A handle 30 is arranged on spray-gun 32, and includes an air valve 31 by means of which all electrical switching operations can be controlled by compressed air. For this purpose, a compressed air operated electrical switch 23 is connected to handle 30 and to air valve 31 through a line 28. The electrical contacts of switch 23 are connected to the supply means as indicated at 24, and electrical connector 53 of switch 23 is connected to the electrical connectors 19, 20 and 21 of the electrically operated components. This arrangement has the advantage that no further control lines need be connected to the spray-gun 32.

The high voltage for the electrodes 33 of spray-gun 32 is generated in a high voltage generator 36, for example, in a cascade, and supplied by high voltage cable 29 to the electrodes 33. The high voltage leaves the cascade, forming part of or connected to high voltage generator 36, through suitable means, such as an insulator 37. FIG. 1 also illustrates how the powder current or spray 35 is directed on workpiece 34.

A switch 40 is provided at the cascade of generator 36, for changing the polarity, and makes it possible to draw high voltage of either positive polarity or negative polarity. In the primary circuit, the voltage can be regulated by means of an adjusting device 39, and a test key 38 serves to regulate the high voltage, whose magnitude can be indicated at the indicator 41 in FIG. 2. The function of the test key and the adjustment of the high voltage is described in more detail hereinafter.

FIG. 2 illustrates the entire apparatus, with powder spray-gun 32 suspended from a stand 51'. From FIG. 2, it will be noted that powder funnel 11 is inserted into the housing from the top, while the control knobs are arranged on a front surface of the housing.

The voltage for horizontal vibrator 7 can be set by adjusting device 16, and the quantity of compressed air for injector 15 can be set at the adjusting regulator 17. The two adjusting devices 16 and 17 can be coupled, as shown by the dotted line 54 in FIG. 1, for conjoint operation. With respect to the schematically illustrated connection 54, it is possible to provide gear members or the like between devices 16 and 17 to effect such conjoint regulation. The accelerating air can be adjusted at the adjusting device 52, and pressure gauges, for pressure indication, are arranged behind adjusting devices 17 and 52, as will be apparent from FIG. 2.

The solenoid valve for the accelerating air can be switched on and off by a switch 42, shown in FIG. 2, while the air supply to injector 15 can be switched on and off by a switch 43. The high voltage is switched on

and off by switch **51**, and the test key is indicated at **38** in FIG. **2**.

After powder funnel **11** has been inserted from the top into the housing shown in FIG. **2**, and turned into the proper position with simultaneous opening of butterfly valve **19** and the locking in adjusted vertical position at **14**, funnel **11** can be locked in position by a lever **55**. After lever **55** is disengaged, funnel **11** can be lifted upwardly out of the housing.

FIG. **3** illustrates the apparatus with front door **45** of the housing being opened so that injector **15** is visible. This injector is arranged on support chassis **3**, and can be easily removed and cleaned after unlocking a lever **44**. Discharge hose **26**, illustrated in FIG. **3**, connects injector **15** to spray-gun **32**, this hose also being illustrated in FIG. **1**.

A water-trap **46** is incorporated in the air supply line to injector **15**, as explained more in detail with respect to FIG. **4**. In FIG. **3**, feeding trough **6** can be seen behind injector **15**. After depressing test key **38**, the high voltage can be adjusted to the desired value by adjusting regulator **39**, and the reading can be taken from the indicating instrument **41**. The remaining controls and parts are denoted by the same reference characters in FIG. **2** as used in FIG. **1**.

Referring to the schematic circuit diagram of FIG. **4**, compressed air from line **18** is supplied to solenoid valve **42** which switches the air current to injector **15** on and off. Water-trap **46** is connected between valve **42** and injector **15**. FIG. **4** also illustrates how powder **48** flows from feeding trough **6** into injector **15** and, by the compressed air supplied to injector **15**, is supplied to line **26** which carries the powder-air mixture to powder spraying gun **32**. When solenoid valve **42** is closed, it opens a by-pass valve **47**, by means of which pressure build-up in the direction of hose **26** to the injector **15** is abruptly reduced, so that spraying of the powder-air mixture at the powder spraying gun **32** is abruptly interrupted. A valve **49** also can be arranged in line **26**, to provide the possibility of coupling valves **47** and **49** to reduce the pressure simultaneously in both pipe sections.

An advantage of the invention apparatus is that the high voltage supply, the proportioning means and the powder storage container are accommodated in a desk-like sheet-steel casing so that the apparatus forms a compact unit. In prior art apparatus, the control disk and the powder container, with its chassis, are separately arranged.

A further advantage is that the high voltage supply is designed for either negative polarity, positive polarity, or reconnectable for both polarities. There is no need for replugging the high voltage cable when changing the polarity. In a known prior art apparatus, two different and separate high voltage cascades are installed for changing the polarity, and these are coupled in alternation to change the polarity. On the other hand, in the apparatus of the invention, only a single high voltage cascade is necessary.

Moreover, a very useful feature of the invention apparatus is that charging the large opening of the powder funnel is relatively easy, in addition to which the powder funnel as a whole can be exchanged. A further advantage is that the powder funnel is kept free of pressure, so that it is always easy to check, from above, whether there is still sufficient powder in the funnel. The ball catch for the powder funnel provides for easy adjustment of the spacing of the powder funnel above the feeding trough, so that continuous powder quantity adjustment can be maintained. Also, the completely filled powder funnel can be easily exchanged, which is very useful for cleaning or for changing the color.

The preproportioning means is also accommodated in the casing, and permits extremely fine regulation of the throughput quantities over a relatively wide range of regulation. Afterspraying of the material being charged, which is encountered in practice with prior art apparatus, when completeing the working process, and delay of the material flow when beginning work, is largely eliminated by the design of the feeding trough with both horizontal and vertical vibration. Additionally, vent valves assure afterspraying being interrupted immediately upon switching off at the spray-gun.

The apparatus can be used selectively for either powder spraying or wet coating, which is a special advantage for smaller enterprises. The regulation of the powder quantity and of the air pressure can furthermore be of such a design that the switching devices **42** and **43** are provided as step switches, and that the adjusting devices **17** and **52** are provided as fine pressure regulators. Furthermore, with the invention apparatus and air blow-out gun, for cleaning the containers and the like, can be connected to the air line.

FIG. **5** illustrates a modification of the apparatus in which injector **61** is arranged directly beneath feed hopper or funnel **55**. As described for the embodiment of the invention shown in FIGS. **1** through **4**, and as can be seen from FIG. **8**, the powder-air current is delivered from injector **61** to the spray-gun, the injector being fastened to the chassis by means of a thumbscrew **63**. In the modification shown in FIG. **5**, powder funnel **55** and injector **61** do not require vibration energy.

As a further development, the apparatus described with reference to FIGS. **1** through **4**, and which is provided with a vibration drive, can be designed in such a way as to permit removal of the vibration drive with a few manipulations, and placing of the injector **61** directly underneath the powder funnel **55**, so that the plant can be operated without a vibration drive. This is applicable especially in the case of specifically relatively light types of powder. When using relatively heavy types of powder, however, the vibration drive and the feeding trough are provided.

From FIG. **5**, it will be seen how butterfly valve shaft **57**, which controls the butterfly valve for closing the bottom opening of the powder funnel, is automatically movable through a lever **58**, carrying a roller, and a cam track **59**, when powder funnel **55** is removed from its bayonet catch by turning of the funnel.

The advantage of the present invention is that an alternatively individually adaptable apparatus for spraying all types of powder is provided, and can be used fully in practice for various fields of service without requiring different models of the apparatus.

A further modification of the apparatus is illustrated in FIG. **6**, in which a cellular wheel lock **65** is arranged beneath powder funnel **54** for receiving powder from funnel **64** into cellular wheel **66** through an opening **43'** and, upon rotation of wheel **66**, delivering the powder

toward a lower section and to an opening 70, the rotation being indicated by the curved arrow. The blade ends of cellular wheel 66 are provided with brushing devices 67 to close the individual cellular chambers.

As shown in FIG. 7, cellular wheel 66 is driven by a motor 68 in the direction of the arrow. In the lower section, an air inlet 72 is provided which, for example, feeds air into the chamber 73 and, by means of injector 70, blows the powder into the line 74 connected with powder gun 101 which is substantially identical to the powder gun 32. With this arrangement, a predetermined quantity of powder is supplied to the powder gun through line 74, in dependence on the speed of motor 68 and the size of slot 43'.

In order to provide a pressure balance in the direction toward filling slot 43', a pressure balance opening 71, illustrated at the left in FIG. 6, is provided, and this pressure balance opening may be connected, for example, to fluidizing bodies 69. FIG. 7 illustrates how the powder, flowing in the direction of the arrow 75', arrives from powder funnel 64 through opening 43' into the upper section of cellular wheel lock 65, and the figure also illustrates how lock 65 is combined with injector 70.

FIG. 8 diagrammatically illustrates an embodiment of the invention apparatus wherein fluidizing bodies 69 can be arranged in powder funnel 64. In addition, fluidizing bodies 76 are arranged in discharge passage 75, and fluidizing bodies 78 are arranged in injector 77. From FIG. 8, it will be noted that fluidizing bodies 69 can be supplied with air by an adjusting valve 79, fluidizing bodies 76 can be supplied with air by adjusting valve 80, and fluidizing bodies 78 can be supplied with air through an adjusting valve 81, so that optionally a selected fluidizing effect can be set by selection of the respective air pressures. The mixing chamber 61 can be seen at the lower section of injector 77, and compressed air is supplied to mixing chamber 76 in the direction of the arrow 98, with the powder-air mixture flowing out through opening 62 in the direction of the arrow adjacent thereto, the powder-air mixture being supplied through a hose or conduit to the powder spraying gun. With this embodiment of the invention, there is realized the effect that, in its passage from the funnel to the spray gun, the powder is broken up at the various locations and an agglomeration of powder at the points of deflection is avoided.

FIG. 9 schematically illustrates the circuits for regulation of the powder-air mixture at the apparatus and at the gun. When moving trigger 82, which is arranged on the gun, a short distance in the direction of arrow 83, valve 84 is actuated and, through line 86, a compressed air operated switch 87 is actuated to open solenoid valve 89. Thus, a smaller quantity of compressed air, supplied from line 86 through a pressure reducing valve 92 and proportioned through a checkvalve 93, is supplied to injector 95 receiving powder from funnel 64 and feeding a powder-air mixture to line 96 connected to the powder gun. With the illustrated arrangement, in the first stage only relatively little compressed air, and thus also relatively little powder, is supplied to the powder gun so that smaller projections or lugs on the workpieces can be coated easily with powder without loss of larger powder quantities.

If trigger 82 is further depressed in the direction of arrow 83, valve 85 is opened to actuate compressed-air operated switch 88 to energize solenoid valve 90, so that a larger quantity of compressed air is fed from pressure reducing valve 91 through checkvalve 94 to injector 95, so that maximum performance, with respect to the powder weight of the spraygun, is obtainable. It will be appreciated that the arrangement illustrated in FIG. 9 provides, in a relatively uncomplicated manner, for a quick adaptation of the powder quantity fed to the requirements of the design of the workpiece to be coated.

In further accordance with the invention, at least part of those walls or surfaces coming into contact with powder are coated with fluorinated or celluconated plastic materials, or both, of the mentioned groups, or these walls can be formed from such plastic materials. The walls or surfaces in question are the walls of the powder funnel, or of the discharge passage of the powder funnel, or the walls of the injector, or the walls of the cellular wheel lock. Preferably, the powder conduit extending between the injector and the powder gun is treated in the same manner. With this procedure, there is assured that the powder does not, due to its adhesion, stick to the walls with which it comes in contact, and does not form agglomerations.

Referring again to FIG. 7, this figure illustrates a spray gun 100 with an extended gun tube 101 and a baffle body 102 having high voltage electrodes 103.

While specific embodiments of the invention have been shown and described in detail to illustrate the application of the principles of the invention, it will be understood that the invention may be embodied otherwise without departing from such principles.

What is claimed is:

1. Apparatus for spray coating material in powdered or liquid form onto workpieces comprising, in combination, a supply station; a support means at said supply station; a materials supply container, containing material to be spray coated and having a discharge opening, removably insertable into said supply station for mounting on said support means; valve means normally closing said discharge opening; means operable, responsive to insertion of said container into said supply station, to open said discharge opening; a source of air under pressure; means operable responsive to insertion of said container into said supply station to couple said source of air under pressure to said container to supply air into said container for agitating the material therein; an injector means mounted on said support means and connected to a source of air under pressure; means connecting said discharge opening to said injector means for delivery of material to said injector means for directing compressed air into the material; a spray-gun; means connecting said injector means to said spray-gun to deliver the powder-air mixture to said spray-gun; electrodes positioned at the discharge outlet of said spray-gun; a high voltage generator; and means operable to selectively connect said high voltage generator to said electrodes.

2. Apparatus, as set forth in claim 1, in which said means connecting said discharge opening to said injector means comprises an elongated feed trough mounted on said support means in a generally horizontal position, with one end spaced beneath said discharge open-

ing and the other end in operative relation with said injector means.

3. Apparatus, as set forth in claim 2, including a first vibrator operatively associated with said support means for vibrating said container and said feeding trough in one direction, and a second vibrator operatively associated with said feeding trough for supplying vibration thereto in another direction.

4. Apparatus, as set forth in claim 3, including an air-injection member connected to a source of air under pressure and arranged centrally within and spaced inwardly from the inner surfaces of said container for producing an air current directed upwardly in such a manner that an approximately revolving motion of the material from the bottom to the top of the container is produced.

5. Apparatus, as set forth in claim 4, wherein said air-injection member has a ring-shaped configuration.

6. Apparatus, as set forth in claim 3, wherein said support means comprises a chassis; a plurality of first cushions of a rubber-like material supported in spaced relationship on said chassis; a support member supported on said first cushions; second cushions formed of a rubber-like material mounted on said support member; support elements secured to and extending upwardly from said second cushions and supporting said feeding trough at the upper ends thereof; and a support bracket secured to and extending upwardly from said support member for supporting said container independently of said second cushions.

7. Apparatus, as set forth in claim 6, in which said supply container is funnel-shaped and has its discharge opening directed downwardly and located at the lower end thereof.

8. Apparatus, as set forth in claim 7, including a carrier mounted on said support bracket; said supply container being removably secured to said carrier.

9. Apparatus, as set forth in claim 6, including a first vibrator attached to said support member and arranged to vibrate in the vertical direction; and means for regulating the vibration of said first vibrator.

10. Apparatus, as set forth in claim 9, including a second vibrator secured to said feeding trough and arranged for vibrating said feeding trough in the horizontal direction; and means for regulating the vibration of said second vibrator.

11. Apparatus, as set forth in claim 1, in which said valve means is a butterfly valve; said means operable to open said butterfly valve comprising a lever connected to said butterfly valve and operating means engageable with said lever responsive to insertion of said container into said supply station.

12. Apparatus, as set forth in claim 11, wherein said operating means comprises a cam engageable with said lever.

13. Apparatus, as set forth in claim 1, including a vent valve positioned between said injection means and said spray-gun and arranged to be actuated when the air supplied to said injector means is cut off.

14. Apparatus, as set forth in claim 3, including a control panel associated with said container, said first and second vibrators, said high voltage generator and said spray-gun; an indicator; and a test key arranged on said control panel for switching off the high voltage from said spray-gun and for switching-on said indicator, calibrated in KV, for adjusting the high voltage value in such a way that after releasing said test key the high voltage value set is applied to said electrodes on said spray-gun.

15. Apparatus, as set forth in claim 1, wherein said ejector is disposed directly beneath the discharge opening of said container.

16. Apparatus, as set forth in claim 1, wherein said valve means comprises a cellular wheel lock containing several chambers; said cellular wheel lock being positioned at the lower end of said container so that the chambers face the interior of said container, for delivering of the material through the discharge opening as said lock is rotated.

17. Apparatus, as set forth in claim 1, wherein at least a part of the walls within said container in contact with the material therein are equipped with fluidizing bodies; the air supply into said container being separately adjustable for regulating the air supply to said fluidizing bodies.

18. Apparatus, as set forth in claim 1, wherein at least part of the walls within said container contacting the material comprise plastic materials of one of the group consisting of polytetrafluoroethylenes, copolymers of tetrafluoro-ethylene and hexafluoropropylene.

19. Apparatus, as set forth in claim 1, wherein said spray-gun includes a trigger; a first switch and a second switch arranged to be actuated by said trigger; means cooperating with said first switch for supplying a smaller quantity of material and compressed air from said spray-gun; and second means associated with said second switch for supplying a full quantity of material and compressed air from said spray-gun.

* * * * *