OPIC
Office de la propriété intellectuelle du Canada

CIPO
Canadian Intellectual Property Office

(12) (19) (CA) **Demande-Application**

(21) (A1) **2,303,111**
(86) 1998/09/24
(87) 1999/08/26

(72) NOMOTO, HIROKI, JP
(72) KISHIMOTO, MITSUHARU, JP
(72) SHIMIZU, MASAKI, JP
(72) TSUTSUMI, KAZUO, JP
(72) KAZARI, MASAHIDE, JP
(71) KAWASAKI JUKOGYO KABUSHIKI KAISHA, JP

(51) Int.Cl.[7] F27B 15/10
(30) 1998/02/20 (10/39870) JP

(54) **FOUR A LIT FLUIDISE DIVISE EN CHAMBRES MULTIPLES**
(54) **MULTICHAMBER DIVISION TYPE FLUIDIZED BED FURNACE**

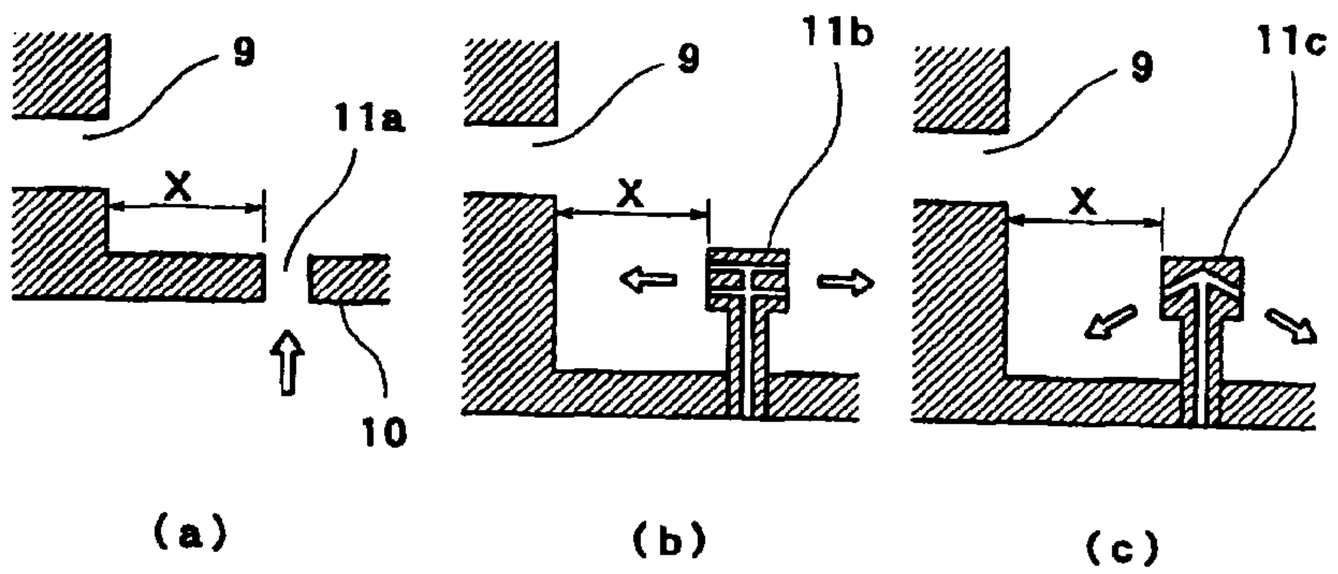

(57) L'invention concerne un four à lit fluidisé dans lequel la différence de hauteur entre les lits fluidisés des chambres séparées avant et arrière est adéquate et n'entraîne pas de mélange à contre-courant. La distance verticale jusqu'au passage (9) communiquant permettant de déplacer la matière de la chambre amont à la chambre aval correspond à 1/4 de la hauteur d'un lit fluidisé, la longueur du passage (9) communiquant est supérieure à 100 mm et la buse d'arrivée du gaz est dirigée vers le haut, presque à la verticale. La structure est conçue de manière que la distance (x) séparant l'entrée du passage (9) de communication de la face terminale de la buse amont est supérieure à 150 mm et que dans les parties closes amont et aval du passage (9) communiquant, un angle formé par rapport au plan horizontal par une ligne reliant le bord la surface supérieure du passage communiquant à l'ouverture de sortie du gaz, est plus important que l'angle formé par la pente de la matière en poudre déposée.

(57) A fluidized bed furnace in which the height difference between the fluidized beds of the front and rear divided chambers is appropriate and does not cause back mixing. When the vertical position of the communication port (9) for moving the material from the upstream-side divided chamber to the downstream-side divided chamber is 1/4 the height of a fluidized bed, the length of the communication port (9) is more than 100 mm, and the gas nozzle is directed almost vertically upward, arrangements are made so that the distance (x) from the inlet of the communication port (9) to the end face of the upstream-side nozzle is larger than 150 mm, that the distance (x) from the outlet of the communication port (9) to the end face of the downstream-side nozzle is larger than 50 mm, and that in both the upstream-side and downstream-side closed portions of the communication port (9), an angle formed with respect to the horizontal plane by a line connecting the corner of the upper surface of the communication port and the gas blowout opening is set larger than the angle of repose of the powder material.

世界知的所有権機関
国際事務局

PCT

特許協力条約に基づいて公開された国際出願

(51) 国際特許分類6 F27B 15/10	A1	(11) 国際公開番号	WO99/42777
		(43) 国際公開日	1999年8月26日(26.08.99)

(21) 国際出願番号 PCT/JP98/04300

(22) 国際出願日 1998年9月24日(24.09.98)

(30) 優先権データ
特願平10/38970 1998年2月20日(20.02.98) JP

(71) 出願人（米国を除くすべての指定国について）
川崎重工業株式会社
(KAWASAKI JUKOGYO KABUSHIKI KAISHA)[JP/JP]
〒650-8670 兵庫県神戸市中央区東川崎町3丁目1番1号
Hyogo, (JP)
(72) 発明者；および
(75) 発明者／出願人（米国についてのみ）
野本博樹(NOMOTO, Hiroki)[JP/JP]
〒655-0872 兵庫県神戸市垂水区塩屋町6-14-9 Hyogo, (JP)
岸本充晴(KISHIMOTO, Mitsuharu)[JP/JP]
〒675-0151 兵庫県加古郡播磨町野添2丁目185番地3
Hyogo, (JP)
清水雅樹(SHIMIZU, Masaki)[JP/JP]
〒651-2272 兵庫県神戸市西区狩場台5-7-11 Hyogo, (JP)
堤香津雄(TSUTSUMI, Kazuo)[JP/JP]
〒651-2215 兵庫県神戸市西区北山台3-25-10 Hyogo, (JP)

鵜 雅英(KAZARI, Masahide)[JP/JP]
〒674-0056 兵庫県明石市大久保町山手台2-67-2 Hyogo, (JP)
(74) 代理人
弁理士 角田嘉宏，外(SUMIDA, Yoshihiro et al.)
〒650-0031 兵庫県神戸市中央区東町123番地の1
貿易ビル3階 Hyogo, (JP)

(81) 指定国 AU, BR, CA, CN, MX, RU, TT, US, 欧州特許
(AT, BE, CH, CY, DE, DK, ES, FI, FR, GB, GR, IE, IT, LU, MC, NL, PT, SE)

添付公開書類
国際調査報告書

(54)Title: MULTICHAMBER DIVISION TYPE FLUIDIZED BED FURNACE

(54)発明の名称 多室分割型流動層炉

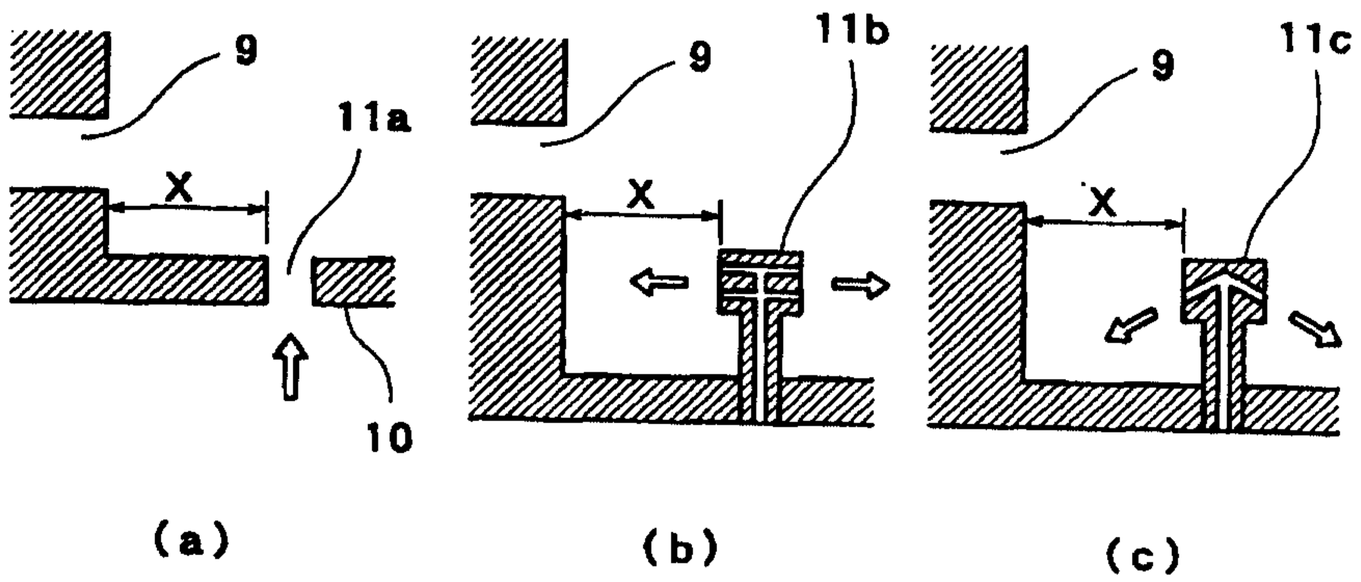

(57) Abstract

A fluidized bed furnace in which the height difference between the fluidized beds of the front and rear divided chambers is appropriate and does not cause back mixing. When the vertical position of the communication port (9) for moving the material from the upstream-side divided chamber to the downstream-side divided chamber is 1/4 the height of a fluidized bed, the length of the communication port (9) is more than 100 mm, and the gas nozzle is directed almost vertically upward, arrangements are made so that the distance (x) from the inlet of the communication port (9) to the end face of the upstream-side nozzle is larger than 150 mm, that the distance (x) from the outlet of the communication port (9) to the end face of the downstream-side nozzle is larger than 50 mm, and that in both the upstream-side and downstream-side closed portions of the communication port (9), an angle formed with respect to the horizontal plane by a line connecting the corner of the upper surface of the communication port and the gas blowout opening is set larger than the angle of repose of the powder material.

PCT/JP98/04300

DESCRIPTION

MULTI – PARTITIONED FLUIDIZED BED REACTOR

TECHNICAL FIELD

The present invention relates to a fluidized bed reactor for treating ore fines in a fluidized state.

BACKGROUND ART

When a gas passes upward through a bed of ore fines and a gas distributor like a multi–orifice plate or a pipe grid in a reactor and the gas velocity is moderately high, an upward frictional force between the ore fines and the gas counterbalances the weight of the ore fines. In such state, the ore fines are all suspended in the upward gas flow and the bed of the ore fines is considered to be fluidized and is referred to as fluidized bed. In the fluidized bed, the particles of the ore fines move up and down by the upward flowing gas. A temperature of the bed can be kept almost uniform and can easily be controlled. Therefore, the fluidized bed reactor has been widely utilized in various industrial fields. For example, recently, a process using a fluidized bed has been utilized to produce iron carbide to which much attention has been paid as a raw material for iron making and steel making. The iron carbide is produced by feeding a fluidized bed reactor with iron ore fines, and reacting the iron ore fines with a reducing gas (a hydrogen gas) and a carburizing gas (for example, a methane gas or the like) at a predetermined temperature to reduce and carburize iron oxide in the iron ore.

As an art of this kind, Japanese Provisional Patent Publication No. Hei 1 – 176003 has disclosed an apparatus for treating ore fines by use of a fluidized bed characterized in that the inside of a fluidized bed reactor 23 having a raw material inlet port 21 and an outlet port 22 is partitioned into upper and lower portions by a gas distributor 24, a gas wind box 25 is provided below the gas distributor 24, a fluidizing chamber 26 above the gas distributor 24 is partitioned into a plurality of

compartments (26a to 26e) by a partition plate 27, a connecting hole is provided on the partition plate 27, and a raw material fed into the fluidized bed reactor 23 flow in a fluidized state from the inlet port 21 toward the outlet port 22 through the connecting hole as shown in Fig. 25.

In the fluidized bed reactor shown in Fig. 25, however, a movement from a compartment to other compartment is performed through the connecting hole which is a simple hole below the partition plate 27. Therefore, back mixing (a phenomenon in which the raw material in a downstream side compartment are reversely moved to an upstream side compartment) is sometimes caused depending on a pressure balance of adjacent compartments. For this reason, the effect obtained by partitioning the fluidized bed is lessened. In order to easily understand the present invention, the back mixing and defects of a conventional fluidized bed reactor related to the back mixing are described below in detail.

In the fluidized bed reactor, generally, ore fines acting as raw material are calcined or reacted. Therefore, it is preferable that a residence time of the ores in the reactor would be increased. In order to increase the residence time, it is applicable that a size of the reactor would be increased or a height of ores bed in the reactor would be increased. According to the former method, an equipment cost is much increased. According to the latter method, the size of the reactor is increased and a power of a gas supply compressor becomes considerably greater so that running cost is increased.

As a result, a fluidized bed reactor obtained by a combination of various well-known gas distributor and partition plates has been devised. For example, a multi-partitioned fluidized bed reactor using a gas distributor has been known, in which an wind box 1 is provided on a bottom, a gas is injected from a large number of gas injecting nozzles 3 provided on a gas distributor 2 above the wind box 1 to form a fluidized bed 4 of iron ore fines on the gas distributor 2, and the fluidized bed 4 is partitioned into a plurality of compartments (4a, 4b, 4c) by a partition plate 5 as shown in Fig. 1. If the fluidized bed is partitioned into a large number of compartments (the number n of partition of the fluidized bed is

increased), the residence time of ores in the reactor is considerably increased as shown in Fig. 2. In Fig. 2, n = 1 denotes a case where the fluidized bed is not partitioned.

In particular, it is impossible to avoid multi-partitioning (for example, partition into four or seven compartments) of the fluidized bed in an iron carbide producing plant requiring the residence time of a few hours or more in the reactor. In order to realize the multi-partitioned fluidized bed having such a feature, the following two requirements have to be taken into consideration.

① No back mixing is caused.

As shown in Fig. 3, it is required that most of ores should flow through a connecting hole 9 from an upstream side compartment 7 to a downstream side compartment 8 which are partitioned by a partition plate 6. Conversely, in a case where a phenomenon in which the ores flow from the downstream side compartment 8 to the upstream side compartment 7 (back mixing) is caused, the effect obtained by partitioning the fluidized bed is reduced. For example, if the back mixing is caused in case of the partition into four compartments, the residence time of ores in the reactor shown in Fig. 2 does not form a distribution curve of n = 4 but a distribution curve close to n = 2 as shown in a dotted line in Fig. 4.

② A difference in a fluidized bed height between the upstream side compartment and the downstream side compartment should be set to have a proper value.

While the fluidized bed height of the upstream side compartment would be greater than that of the downstream side compartment in order to obtain a flow from the upstream side to the downstream side, it is desirable that the difference in the fluidized bed height would be small. For example, if a seven-partitioned fluidized bed reactor has a difference in a fluidized bed height of 200 mm, the total difference becomes a great value of 1200 mm (200 mm × 6). Consequently, the fluidized bed reactor cannot be applied to a process having an average fluidized bed height of 1000 mm or 2000 mm (Extra considerations are required for the

application. In other words, it is necessary to increase the height of the reactor. In addition, it is necessary for a supply gas pressure to be large so as to cope with the greatest fluidized bed height. Therefore, the equipment and running cost is increased. Furthermore, it is hard to uniformly distribute a gas to the compartments. More specifically, if a gas pressure loss of the gas distributor is not extremely increased, the gas is not uniformly distributed.)

One of the countermeasures for the back mixing in a multi-partitioned fluidized bed reactor according to the prior art which is based on the above-mentioned viewpoints is that a size of the connecting hole for connecting the adjacent compartments is reduced. If the size of the connecting hole is reduced, the difference in the fluidized bed height between upstream and downstream compartments is increased. Consequently, the above-mentioned disadvantages are given.

Furthermore, the defects of the conventional fluidized bed reactor will be described below.

③ If a length of the connecting hole is 100 mm or less, the back mixing is caused.

In general, a pressure at each point in the fluidized bed fluctuates in a shorter time period than 1 second, and ores are moved according to a pressure difference between an inlet of the connecting hole and an outlet thereof. For example, a flow of the ores passing through the connecting hole fluctuates as shown in Fig. 5. In Fig. 5, the mark "plus(+)" denotes a flow from the upstream side to the downstream side, and the mark "minus(−)" denotes a flow from the downstream side to the upstream side (back mixing). Accordingly, if the connecting hole has a small length (for example, 5 mm), the back mixing is easily caused.

In this case, however, when the connecting hole has a great length, the ores flowing in the direction of "minus(−)" stay in the connecting hole even if the flow in the direction of "minus(−)" is caused. As a result, only the flow in the direction of "plus(+)" is obtained.

④ In a case where the downflow comprising the dense ores is not formed in the vicinity of the inlet and outlet of the connecting hole, a void portion is generated in the connecting hole so that a large quantity of the gas easily pass through the connecting hole. Consequently, the difference in the fluidized bed height is badly increased. Furthermore, a large quantity of the gas can easily flow from the upstream side to the downstream side so that the back mixing is caused.

In consideration of such problems of the prior art, it is an object of the present invention to provide a fluidized bed reactor having a proper difference in a fluidized bed height between a upstream and a downstream compartments without causing back mixing or with extremely small amount of back mixing.

DISCLOSURE OF INVENTION

In order to attain the above-mentioned object, a vertical height of the position of the connecting hole is set to a constant value or less, a length of the connecting hole for connecting the adjacent compartments is set to a constant value or more, a distance between an inlet and outlet of the connecting hole and an end surface of a gas injecting nozzle is set to a constant value or more, and an angle formed by a line connecting a corner portion of an upper surface of the connecting hole and a gas injecting nozzle with respect to a horizontal plane is set greater than an angle of repose of raw material fines. Consequently, the raw material in an upstream side compartment can be moved to a downstream side compartment through the connecting hole substantially without causing fixed accumulation of the material in the vicinity of the inlet and the outlet of the connecting hole and back mixing.

An aspect of the present invention is directed to a multi-partitioned fluidized bed reactor of a bubbling bed type for performing a reaction while fluidizing raw material fines fed from one side surface of the reactor by a reaction gas injected from a large number of injecting nozzles provided on a gas distributor placed on a lower portion in the reactor, thereby discharging a product from the

other side surface of the reactor, wherein a fluidized bed is partitioned into a plurality of compartments by partition plates, a connecting hole for moving the raw materials from an upstream side compartment to a downstream side compartment is provided in the lower part of the partition plate, and an average moving speed of the raw materials passing through the connecting hole is 500 mm/second or less, the multi-partitioned fluidized bed reactor meeting conditions that a vertical position of the connecting hole has a height which is 1/4 of a fluidized bed height or less, a length of the connecting hole is 100 mm or more, in a case where the gas injecting nozzle injects a gas upward in an almost vertical direction, a distance between an inlet of the connecting hole and an end surface of an upstream side nozzle is greater than 150 mm and a distance between an outlet of the connecting hole and an end surface of a downstream side nozzle is greater than 50 mm, in a case where the gas injecting nozzle injects a gas in an almost horizontal direction, the distance between the inlet of the connecting hole and the end surface of the upstream side nozzle is greater than 200mm and the distance between the outlet of the connecting hole and the end surface of the downstream side nozzle is greater than 100 mm, in a case where the gas injecting nozzle injects a gas obliquely downward, the distance between the inlet of the connecting hole and the end surface of the upstream side nozzle is greater than 200 mm and the distance between the outlet of the connecting hole and the end surface of the downstream side nozzle is greater than 100 mm, and an angle formed by a line connecting a corner portion of an upper surface of the connecting hole and a gas injecting port with respect to a horizontal plane is greater than an angle of repose of the raw material fines in any of openings on upstream and downstream sides of the connecting hole.

Based on a relationship with the function of the present invention, the reason for restriction on each constituent feature of the fluidized bed reactor having the above-mentioned constitution are described below in detail.

(1) A flow of only gas in the connecting hole is not generated.

When a large amount of the gas flows in the connecting hole, a pressure

loss is increased. Therefore, a difference in a fluidized bed height between upstream and downstream compartments is increased (for the same flow of ore fines) and back mixing is caused. In order to prevent the increase in said difference in the fluidized bed height and the back mixing, it is necessary to substantially fill the connecting hole with the ore fiens. More specifically, if only the ore fines are present in the connecting hole, the whole ore particles are moved so as to be pushed out from the upstream side toward the downstream side depending on a pressure difference between the upstream side fluidized bed and the downstream side fluidized bed (in a case where the ore fines are slightly moved from the downstream side toward the upstream side temporarily or instantaneously, there is no problem if such moving distance is smaller than a length of the connecting hole.)

It is preferable that the following means would be employed in order to minimize the gas flow in the connecting hole.

① Set a vertical position of the connecting hole to 1/4 of the fluidized bed height or less.

It is not preferred that the vertical position of the connecting hole is too high. The reason is as follows. The ore fines in the fluidized bed have a low density in an upper portion. If the connecting hole is placed in a high position, a gas easily flows into the connecting hole. Accordingly, it is preferable that the vertical position of the connecting hole would be 1/4 of the fluidized bed height or less.

② Form a downflow comprising dense ore fines in the vicinity of an inlet of the connecting hole.

If a gas injecting nozzle 11 provided on a gas distributor plate 10 is positioned apart from a partition plate 6 by a proper distance as shown in Fig. 6, the ore fines are moved to generate a dense downflow in the vicinity of the connecting hole 9 as shown by an arrow in Fig. 6. The dense downflow in the vicinity of the inlet of the connecting hole blocks a gas flow into the connecting hole.

③ Increase a thickness of the downflow comprising the dense ore

fines in the vicinity of the inlet of the connecting hole.

When the ore fines are moved from the upstream side to the downstream side through the connecting hole, a part of the downflow of the ore fines flows into the connecting hole 9 as shown in Fig. 7 (a). At this time, if a thickness of the downflow is small, not only ore fines P but also gas G is sucked in large quantities into the connecting hole 9 as shown in Fig. 7 (b). When a large quantity of the gas is sucked into the connecting hole, the above-mentioned trouble is caused. Therefore, a thickness of the downflow comprising the dense ore fines in the vicinity of the inlet of the connecting hole should be increased.

An experiment was performed in order to investigate such a cause as the downflow comprising the dense ore fines was formed in the vicinity of the inlet of the connecting hole and the thickness of the downflow was increased. As a result, it has been found out that the relative positions of the connecting hole 9 and the gas injecting nozzles (11a, 11b, 11c) are important as shown in Fig. 8. In a case where the gas injecting nozzle is too close to the connecting hole 9, the thickness of the downflow of the ore fines is very small (or the downflow is not formed) and a gas flow is generated in the connecting hole. Therefore, the ore fines cannot be moved in the connecting hole. On the other hand, it has been found out that the thickness of the downflow in the vicinity of the inlet of the connecting hole is increased as the gas injecting nozzle is positioned apart from the connecting hole 9.

In a case where an upward nozzle 11a for injecting a gas upward in an almost vertical direction is used as shown in Fig. 9 (a), it is preferable that a distance X between the inlet of the connecting hole 9 and an end surface of the upward nozzle 11a which is shown in Fig. 8 (a) would be set greater than 150 mm.

In a case where a horizontal nozzle 11b for injecting a gas in an almost horizontal direction (a flow velocity in the nozzle is 10 to 80 m/second) is used as shown in Fig. 9 (b), it is preferable that a distance X between the inlet of the connecting hole 9 and an end surface of the horizontal nozzle 11b which is shown in Fig. 8 (b) would be set greater than 200 mm. In a case where an obliquely downward nozzle 11c for injecting a gas obliquely downward (a flow velocity in the nozzle is 10

to 80 m/second) is used as shown in Fig. 9 (c), it is preferable that a distance X between the inlet of the connecting hole 9 and an end surface of the obliquely downward nozzle 11c which is shown in Fig. 8 (c) would be set greater than 200 mm.

The limitation on the distance X can be applied to a case where an average moving speed of the ore fines in the connecting hole is 500 mm/second or less. The reason is as follows. If the average moving speed of the ore fines is higher than 500 mm/second, the ore fines are moved from the inlet of the connecting hoel toward the outlet thereof without limiting the distance X to a constant value or more and causing back mixing.

The average moving speed of the ore fines in the hole represents a numeric value (m/hr) obtained by dividing, by a sectional area (m^2) of the connecting hole, a flow rate Q (m^3/hr) obtained by dividing a feed A (ton/hr) of the ore fines by a bulk specific gravity γ (ton/m^3).

④ Form a downflow comprising the dense ore fines in the vicinity of the outlet of the connecting hole.

In a case where the downflow comprising the dense ore fines is not formed in the vicinity of the outlet of the connecting hole, the ore fines are not present in the outlet portion of the connecting hole 9 and an effective length of the connecting hole filled with the ore fines is reduced as shown in Fig. 10. Consequently, the back mixing is easily caused as described above. Therefore, it is preferable that the downflow comprising the dense ore fines would be formed in the vicinity of the outlet of the connecting hole as well as the inlet thereof. For this purpose, it is preferable that a distance X between an end surface of a gas injecting nozzle and the outlet of the connecting hole would be set to a constant value or more in the same manner as in the inlet. Furthermore, it is sufficient that the ore fines in the connecting hole are pressed so as not to slip off on the outlet side and that a thickness of a downflow is smaller than on the inlet side, which is described specifically below.

In a case where the upward nozzle 11a for injecting a gas upward in an

almost vertical direction is used as shown in Fig. 9 (a), it is preferable that the distance X would be set greater than 50 mm.

In a case where the horizontal nozzle 11b for injecting a gas in an almost horizontal direction is used as shown in Fig. 9 (b), it is preferable that the distance X would be set greater than 100 mm.

In a case where the obliquely downward nozzle 11c for injecting a gas obliquely downward is used as shown in Fig. 9 (c), it is preferable that the distance X would be set greater than 100 mm.

(2) Cause no accumulation of the ore fines before and after the connecting port.

If the ore fines are accumulated before and after the connecting hole as shown in Fig. 11, the ore fines in the connecting hole are not moved. In order to move the ore fines in the hole, it is necessary to considerably increase a difference in a fluidized bed height between compartments before and after the connecting hole (for example, a wasteful value of several hundreds mm would be set). The generation of the accumulation portion depends on an angle formed by a line connecting the connecting hole and the gas injecting port with respect to a horizontal plane. In general, the ore fines are lifted up by a gas flow in the vicinity of the gas injecting nozzle. Therefore, if an angle α formed by a line L connecting a corner portion P of a lower surface of a connecting hole 9 and a gas injecting port Q with respect to the horizontal plane is greater than an angle of repose of the ore fines as shown in Fig. 12, the accumulation portion of the ore fines is not generated in the vicinity of the inlet of the connecting hole 9 but the ore fines in the connecting hole 9 are moved from the inlet toward the outlet. In reality, it has been found out that the movement of the ore fines in the connecting hole 9 is not hindered even if the angle α is slightly smaller than the angle of repose of the ore fines. That is to say, it has been found out that there is no problem if an angle β formed by a line M connecting a corner portion R of an upper surface of the connecting hole 9 and the gas injecting port Q with respect to the horizontal plane is greater than the angle of repose of the ore fines as shown in

Fig. 13. The reason is as follows. Even if the angle α is smaller than the angle of repose of the ore fines and a little accumulation portion is present in the vicinity of the inlet of the connecting hole, the movement of the ore fines in the connecting hole is not substantially hindered because a considerable quantity of the ore fines on the line M and in the vicinity thereof (below the line M) slides down a slant together with a downflow.

Accordingly, it is preferable that the angle formed by the line connecting the corner portion of the upper surface of the connecting hole 9 and the gas injecting port with respect to the horizontal plane would be greater than the angle of repose of the ore fines.

It is preferable that a relationship between the angles α and β and the angle of repose of the ore fines would be the same as in the outlet of the connecting hole.

The foregoing results are similarly applied to various well-known gas distributor as well as the gas distributor plate.

(3) Others

① It is preferable that the lower surface of the connecting hole would be positioned above a tip of an injection portion of the gas injecting nozzle. The reason is that an accumulation portion is generated in the connecting hole with difficulty.

② It is preferable that a diameter of the opening on the upstream side of the connecting hole would be gradually reduced toward the downstream side. The reason is that the ore fines easily flow into the connecting hole.

③ It is preferable that a lower surface portion of the opening on the upstream side of the connecting hole would protrude from an end surface of a partition plate toward the upstream side. The reason is that a downflow comprising the dense ore fines is easily generated in the vicinity of the inlet of the connecting hole. It is preferable that a corner portion of an upper surface of a protruding portion would be obliquely cut. The reason is that an ore accumulation portion is generated in the vicinity of the inlet of the connecting hole with difficulty.

④ It is preferable that the upper surface of the protruding portion would be slanted downward from the upstream side toward the downstream side. The reason is that the ore fines easily flow in the connecting hole.

⑤ It is preferable that the connecting hole would be slanted downward from the upstream side toward the downstream side. The reason is that the ore fines easily flow in the connecting hole.

⑥ It is preferable that an angle of the slant would be greater than an angle of repose of the ore fines. The reason is that an accumulation portion is generated with difficulty.

⑦ It is preferable that a lower surface portion of an opening on the downstream side of the connecting hole would protrude from the end surface of the partition plate toward the downstream side. The reason is that a downflow comprising the dense ore fines is formed in the vicinity of the outlet of the connecting hole. It is preferable that a corner portion of an upper surface of a protruding portion would be obliquely cut. The reason is that an accumulation portion is generated in the vicinity of the outlet of the connecting hole with difficulty.

⑧ It is preferable that the connecting hole would protrude from both end surfaces of the partition plate on the upstream and downstream sides. The reason is that a downflow comprising the dense ore fines is formed in the vicinity of the inlet and outlet sides of the connecting hole irrespective of a thickness of the partition plate.

⑨ It is preferable that one or more gas injecting nozzles would be provided in a middle portion of the connecting hole and that a reaction gas would be injected from the gas injecting nozzle(s) into the connecting hole. Consequently, the ore fines are not accumulated in the connecting hole. As to the reaction gas, a part of gas introduced into the fluidized bed reactor or a gas introduced from the outside can be used. A porous material, for example, a porous refractory material (brick) can also be used as the tip of the gas injecting nozzle. It is preferable that the tip of the gas injecting nozzle would be bent obliquely from the upstream side

toward the downstream side. The reason is that the effect of inhibiting the accumulation of the ore fines in the connecting hole can further be enhanced.

Since the present invention has the above-mentioned constitution, the following effects can be obtained.

① According to the first aspect of the present invention, it is possible to provide a fluidized bed reactor in which raw material fines can be moved from the upstream side toward the downstream side in the connecting hole while keeping a proper difference in a fluidized bed height between compartments on the upstream and downstream sides without causing back mixing. Accordingly, it is possible to realize a fluidized bed reactor having low equipment and running cost.

② According to the second aspect of the present invention, it is possible to provide a fluidized bed reactor in which the raw material fines are accumulated in the connecting hole with difficulty.

③ According to the third aspect of the present invention, it is possible to provide a fluidized bed reactor in which the raw material fines easily flow into the connecting hole.

④ According to the fourth aspect of the present invention, it is possible to provide a fluidized bed reactor in which a downflow comprising the dense raw material fines is easily formed in the vicinity of the inlet of the connecting hole.

⑤ According to the fifth aspect of the present invention, it is possible to provide a fluidized bed reactor in which the raw material fines are accumulated in the vicinity of the inlet of the connecting hole with difficulty.

⑥ According to the sixth, seventh and eighth aspects of the present invention, it is possible to provide a fluidized bed reactor in which the raw material fines are easily moved in the connecting hole.

⑦ According to the ninth aspect of the present invention, it is possible to provide a fluidized bed reactor in which a downflow comprising the dense raw material fines is easily formed in the vicinity of the outlet of the connecting hole.

⑧ According to the tenth aspect of the present invention, it is possible to provide a fluidized bed reactor in which the raw material fines are accumulated in

the vicinity of the outlet of the connecting hole with difficulty.

⑨ According to the eleventh aspect of the present invention, it is possible to provide a fluidized bed reactor in which a downflow comprising the dense raw material fines is easily formed in the vicinity of the inlet and outlet of the connecting hole, the back mixing is caused with difficulty, and the raw material fines can be moved from the upstream side toward the downstream side in the connecting hole irrespective of a thickness of the partition plate.

⑩ According to the twelfth, thirteenth and fourteenth aspects of the present invention, it is possible to provide a fluidized bed reactor in which the raw material fines are accumulated in the connecting hole with difficulty.

Although the present invention has fully been described by way of example with reference to the accompanying drawings, it is to be understood that various changes and modifications will be apparent to those skilled in the art. Therefore, unless otherwise such changes and modifications depart from the scope of the invention, they should be construed as being included therein.

BRIEF DESCRIPTION OF DRAWINGS

Figure 1 is a longitudinal sectional view showing a multi-partitioned fluidized bed reactor according to an embodiment of the present invention;

Figure 2 is a chart showing a relationship between a quantity of raw material ores in the fluidized bed reactor and a residence time of ores in the reactor ;

Figure 3 is a view typically illustrating a state in which the raw materials are moved in the fluidized bed reactor;

Figure 4 is a chart showing a relationship between the quantity of the raw material ores in the fluidized bed reactor and the residence time of ores in the reactor;

Figure 5 is a chart illustrating a state in which the raw materials are moved in a connecting hole for connecting compartments;

Figure 6 is a view illustrating a flow of ore fines in the vicinity of an inlet

of the connecting hole;

Figures 7 (a) and 7 (b) are another views illustrating the flow of the ore fines in the vicinity of the inlet of the connecting hole;

Figures 8 (a), 8 (b) and 8 (c) are views illustrating a distance X between the inlet of the connecting hole and an end surface of a gas injecting nozzle;

Figure 9 (a) is a sectional view showing an upward nozzle, Figure 9 (b) is a sectional view showing a horizontal nozzle, and Figure 9 (c) is a sectional view showing an obliquely downward nozzle;

Figure 10 is a view illustrating filling conditions of the ore fines in the vicinity of an outlet of the connecting hole;

Figure 11 is a view illustrating a fixed accumulation of the ore fines in the vicinity of the inlet of the connecting hole;

Figure 12 is a view illustrating an angle (α) formed by a line connecting a corner portion P of a lower surface of an opening on the upstream side of the connecting hole and a gas injecting port Q with respect to a horizontal plane;

Figure 13 is a view illustrating an angle (β) formed by a line connecting a corner portion R of an upper surface of the opening on the upstream side of the connecting hole and the gas injecting port Q with respect to the horizontal plane;

Figures 14 (a) and 14 (b) are sectional views showing an example in which a diameter of the opening on the upstream side of the connecting hole is gradually reduced toward the downstream side;

Figure 15 is a sectional view showing an example in which a lower surface portion of the opening on the upstream side of the connecting hole protrudes from an end surface of a partition plate;

Figure 16 is a sectional view showing an example in which a corner portion of an upper surface of a protruding portion in Figure 15 is obliquely cut;

Figure 17 is a sectional view showing an example in which the upper surface of the protruding portion in Figure 15 is slanted downward from the upstream side toward the downstream side;

Figure 18 is a sectional view showing an example in which the connecting

hole is slanted downward from the upstream side toward the downstream side;

Figure 19 is a sectional view showing an example in which a lower surface portion of an opening on the downstream side of the connecting hole protrudes from the end face of the partition plate;

Figure 20 is a sectional view showing an example in which a corner portion of an upper surface of a protruding portion in Figure 19 is obliquely cut;

Figure 21 is a sectional view showing an example in which the connecting hole protrudes from both end surfaces of the partition plate on the upstream and downstream sides;

Figure 22 is a sectional view showing an example in which a gas injecting nozzle is provided in a middle portion of the connecting hole;

Figure 23 is a sectional view showing an example in which a porous material is used as a tip of the gas injecting nozzle provided in the middle portion of the connecting hole;

Figure 24 is a sectional view showing an example in which the tip of the gas injecting nozzle provided in the middle portion of the connecting hole is obliquely bent from the upstream side toward the downstream side; and

Figure 25 is a schematic view showing a structure of a fluidized bed reactor according to an example of the prior art.

BEST MODE FOR CARRYING OUT THE INVENTION

Embodiments of the present invention will be described below together with experimental conditions with reference to the drawings.

(1) Experimental Condition (one example)

① Raw Material Fines

a. 2.0 ton/hr of iron ore fines having a bulk density of 2.0 ton/m^3 was fed into experimental equipment of a fluidized bed reactor.

b. 2.0 ton/hr of silica fines having a bulk density of 1.5 ton/m^3 was fed into the experimental equipment of the fluidized bed reactor.

As the experimental equipment of the fluidized bed reactor was used a

cylindrical transparent plastic vessel capable of clearly observing a fluidization phenomenon of the raw material fines. The experimental equipment is very different from the actual fluidized bed reactor shown in Fig. 1 in that a support pipe 12 for supporting a gas distributor plate 2 is not provided and one partition plate 5 for partitioning a fluidized bed 4 is provided. Furthermore, an air was used as gas and an ordinary temperature was set.

② A height of a connecting hole provided in the lower part of the partition plate was set to about 1/4 of a fluidized bed height or less.

③ The connecting hole had a bore of 150 mm.

④ The average moving speed of the raw material fines passing through the connecting hole is 20 mm/second for the iron ore fines, and 30 mm/second for the silica fines under the conditions ① and ③.

(2) Basic Form (Structure shown in Fig. 8)

The connecting hole 9 has a length of 200 mm. In a case where the gas injecting nozzle injected a gas upward in an almost vertical direction, a distance X on the inlet side was set to 200 mm and a distance X on the outlet side was set to 200 mm. In a case where the gas injecting nozzle injected a gas obliquely downward, the distance X on the inlet side was set to 250 mm and the distance X on the outlet side was set to 200 mm. An angle β (see Fig. 13) was set to 45° (the angle of repose of the iron ore fines is 40° and that of the silica fines is 30°).

Under the above-mentioned conditions, a fluidization experiment for the iron ore fines or the silica fines was performed. By the influence of a pressure difference on the inlet and outlet sides of the connecting hole 9, any of said raw material fines passing through the connecting hole 9 was moved from a compartment on the upstream side to a compartment on the downstream side while performing slight movement toward the inlet side after movement toward the outlet side by a constant distance without causing back mixing.

In a case where the gas injecting nozzle injected a gas upward in the almost vertical direction, and the distance X on the inlet side of the connecting hole 9 was set to 150 mm or less and the distance X on the outlet side of the

connecting hole 9 was set to 50 mm or less, the gas flowed into the connecting hole so that a difference in a fluidized bed height between the compartments on the upstream and downstream sides was remarkably increased (about 200 mm) and the back mixing was caused. In a case where the gas injecting nozzle injected a gas obliquely downward, and the distance X on the inlet side of the connecting hole 9 was set to 200 mm or less and the distance X on the outlet side of the connecting hole 9 was set to 100 mm or less, the same phenomenon occurred.

In a case where the angle β was equal to or less than the angle of repose of the iron ore fines, an accumulation portion was generated in the vicinity of the inlet of the connecting hole so that the raw material fines could not be moved in the connecting hole.

(3) A diameter of the opening on the upstream side of the connecting hole is gradually reduced toward the downstream side.

It is shown in Fig. 14 (a) that the opening on the upstream side of the connecting hole 9 is formed like a curved surface. It is shown in Fig. 14 (b) that the opening on the upstream side of the connecting hole 9 is obliquely cut. It was confirmed that the raw material fines smoothly flowed into the connecting hole 9 with any of the above-mentioned forms.

(4) A lower surface portion of the opening on the upstream side of the connecting hole is caused to protrude from an end surface of a partition plate toward the upstream side.

It was confirmed that a downflow comprising the dense ore fines was formed in the vicinity of the inlet of the connecting hole 9 when a lower surface portion 13 of the opening on the upstream side of the connecting hole 9 was caused to protrude toward the upstream side as shown in Fig. 15. It was confirmed that the ore fines were moved from the inlet toward the outlet in the connecting hole 9 without causing back mixing.

(5) A corner portion of an upper surface of a protruding portion shown in Fig. 15 is obliquely cut.

With the structure shown in Fig. 15, a little accumulation portion of the

ore fines was generated on the lower surface portion 13. It was confirmed that the accumulation portion was hardly present by obliquely cutting the corner portion of the upper face of the lower surface portion 13 as shown in Fig. 16.

(6) The upper surface of the protruding portion shown in Fig. 15 is slanted by 30° downward from the upstream side toward the downstream side.

When the lower surface portion 13 is slanted by 30° downward from the upstream side toward the downstream side as shown in Fig. 17, a dead weight of the ore fines is added to a pressure difference of a fluidized bed between the inlet and outlet sides of the connecting hole 9. Therefore, it was confirmed that the movement of the ore fines in the connecting hole 9 was slightly promoted as compared with the structure shown in Fig. 15 or 16.

(7) The connecting hole is slanted downward from the upstream side toward the downstream side.

It was confirmed that the movement of the ore fines in the connecting hole 9 was slightly promoted as compared with the structure shown in Fig. 8 when the connecting hole 9 was slanted by 30° downward from the upstream side toward the downstream side as shown in Fig. 18.

It is preferable that the angle of slant in Figs. 17 and 18 would be set to about 30° or more in order to promote the movement of the ore fines.

(8) A lower surface portion of the opening on the downstream side of the connecting hole is caused to protrude from the end surface of the partition plate toward the downstream side.

It was confirmed that a downflow comprising the dense ore fines was formed in the vicinity of the outlet of the connecting hole 9 when a lower surface portion 13 of the opening on the downstream side of the connecting hole 9 was caused to protrude toward the downstream side as shown in Fig. 19. It was confirmed that the ore fines were moved from the inlet toward the outlet in the connecting hole 9 without causing back mixing.

(9) A corner portion of a protruding portion shown in Fig. 19 is obliquely cut. With the structure shown in Fig. 19, a little accumulation portion of the

ore fines was generated on the lower surface portion 13. It was confirmed that the accumulation portion was hardly present by obliquely cutting the corner portion of the upper surface of the lower surface portion 13 as shown in Fig. 20.

(10) A connecting hole having a length of 100 mm or more is caused to protrude toward the upstream and downstream sides in the lower part of a partition plate having a thickness of 100 mm or less.

While the partition plate is cut to provide the connecting hole in any of the above-mentioned examples, it was confirmed that the same effects could be obtained with a pipe-shaped connecting hole 9a shown in Fig. 21 provided on a partition plate 6.

(11) A gas injecting nozzle is provided in a middle portion of the connecting hole.

As shown in Fig. 22, a gas injecting nozzle 14 is provided in the middle portion of the connecting hole 9, and a part of a reaction gas introduced into the fluidized bed reactor is injected into the connecting hole 9 through the gas injecting nozzle 14. Consequently, it was confirmed that the accumulation portion of the ore fines in the connecting hole 9 was hardly present.

Fig. 23 shows a case where a porous material 15 (a porous refractory material (brick)) is used as a tip of the gas injecting nozzle 14. It was confirmed that the ore fines could be prevented from being accumulated in the connecting hole 9 in the same manner as in Fig. 22 when the tip of the gas injecting nozzle 14 was made of the porous material as shown in Fig. 23.

In Fig. 24, three gas injecting nozzles 14a, 14b and 14c are provided on the connecting hole 9, and the tips of said nozzles are bent obliquely from the upstream side toward the downstream side. Consequently, it was confirmed that the accumulation of the ore fines in the connecting hole 9 was completely eliminated.

IUDUSTRIAL APPLICABILITY

Since the present invention has the above-mentioned constitution, a

fluidized bed reactor in accordance with the present invention has a proper difference in a fluidized bed height between a upstream and a downstream compartments without causing back mixing or with extremely small amount of back mixing. Accordingly, the fluidized bed reactor of the present invention is suitable for treating ore fines in a fluidized state.

CLAIMS

1. A multi-partitioned fluidized bed reactor of a bubbling bed type for performing a reaction while fluidizing raw material fines fed from one side surface of the reactor by a reaction gas injected from a large number of gas injecting nozzles provided on a gas distributor placed on a lower portion in the reactor, thereby discharging a product from the other side surface of the reactor, wherein a fluidized bed is partitioned into a plurality of compartments by partition plates, a connecting hole for moving the raw materials from an upstream side compartment to a downstream side oompartment is provided in the lower part of the partition plate, and an average moving speed of the raw materials passing through the connecting hole is 500 mm/second or less, the multi-partitioned fluidized bed reactor meeting conditions that:

a vertical position of the connecting hole has a height which is 1/4 of a fluidized bed height or less;

a length of the connecting hole is 100 mm or more;

in a case where the gas injecting nozzle injects a gas upward in an almost vertical direction, a distance between an inlet of the connecting hole and an end surface of an upstream side nozzle is greater than 150 mm and a distance between an outlet of the connecting hole and an end surface of a downstream side nozzle is greater than 50 mm;

in a case where the gas injecting nozzle injects a gas in an almost horizontal direction, the distance between the inlet of the connecting hole and the end surface of the upstream side nozzle is greater than 200 mm and the distance between the outlet of the connecting hole and the end surface of the downstream side nozzle is greater than 100 mm;

in a case where the gas injecting nozzle injects a gas obliquely downward, the distance between the inlet of the connecting hole and the end surface of the upstream side nozzle is greater than 200 mm and the distance between the outlet of the connecting hole and the end surface of the downstream side nozzle is greater

than 100 mm; and

an angle formed by a line connecting a corner portion of an upper surface of the connecting hole and a gas injecting port with respect to a horizontal plane is greater than an angle of repose of the raw material fines in any of openings on upstream and downstream sides of the connecting hole.

2. The multi-partitioned fluidized bed reactor of Claim 1 wherein a lower surface of the connecting hole is positioned above a gas injecting portion of the gas injecting nozzle.

3. The multi-partitioned fluidized bed reactor of Claim 1 or 2 wherein a diameter of the opening on the upstream side of the connecting hole is gradually reduced toward the downstream side.

4. The multi-partitioned fluidized bed reactor of Claim 1 or 2 wherein a lower surface portion of the opening on the upstream side of the connecting hole protrudes from an end surface of the partition plate toward the upstream side.

5. The multi-partitioned fluidized bed reactor of Claim 4 wherein a corner portion of an upper surface of a protruding portion is obliquely cut.

6. The multi-partitioned fluidized bed reactor of Claim 4 wherein an upper surface of a protruding portion is slanted downward from the upstream side toward the downstream side.

7. The multi-partitioned fluidized bed reactor of Claims 1, 2 or 3 wherein the connecting hole is slanted downward from the upstream side toward the downstream side.

8. The multi-partitioned fluidized bed reactor of Claim 6 or 7 wherein an angle of slant is greater than an angle of repose of the raw material fines.

9. The multi-partitioned fluidized bed reactor of Claim 1 wherein a lower surface portion of the opening on the downstream side of the connecting hole protrudes from an end surface of the partition plate toward the downstream side.

10. The multi-partitioned fluidized bed reactor of Claim 9 wherein a corner portion of an upper surface of a protruding portion is obliquely cut.

11. The multi-partitioned fluidized bed reactor of Claim 1 wherein the connecting hole protrudes from both end surfaces of the partition plate on the upstream and downstream sides.

12. The multi-partitioned fluidized bed reactor of Claim 1 wherein one or more gas injecting nozzles are provided in a middle portion of the connecting hole, and a reaction gas is injected from the gas injecting nozzle into the connecting hole.

13. The multi-partitioned fluidized bed reactor of Claim 12 wherein a porous material is used as a tip of the gas injecting nozzle.

14. The multi-partitioned fluidized bed reactor of Claim 12 wherein a tip of the gas injecting nozzle is obliquely bent from the upstream side toward the downstream side.

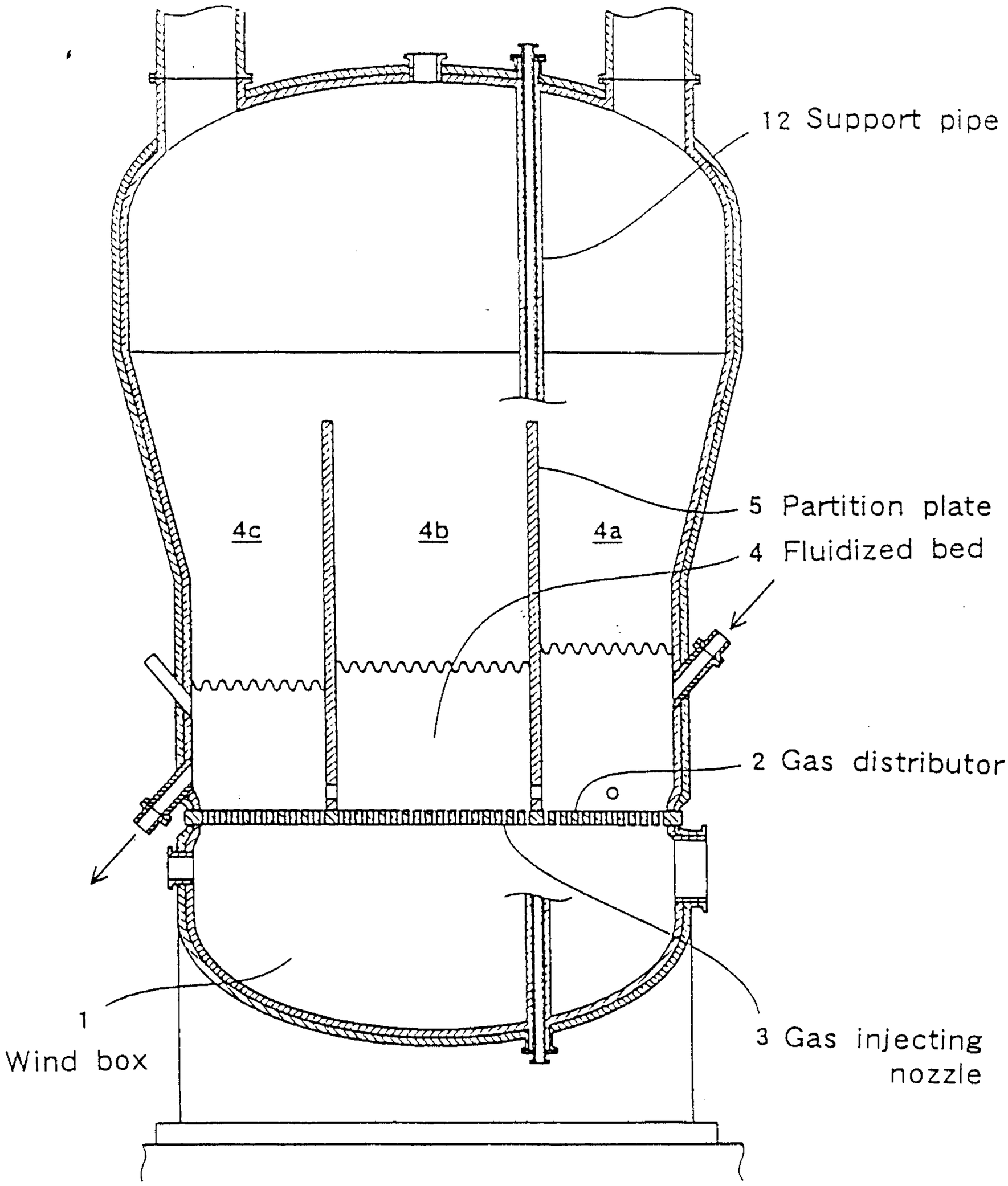
12 Support pipe
5 Partition plate
4 Fluidized bed
4c
4b
4a
2 Gas distributor
1
Wind box
3 Gas injecting
nozzle

Fig. 1

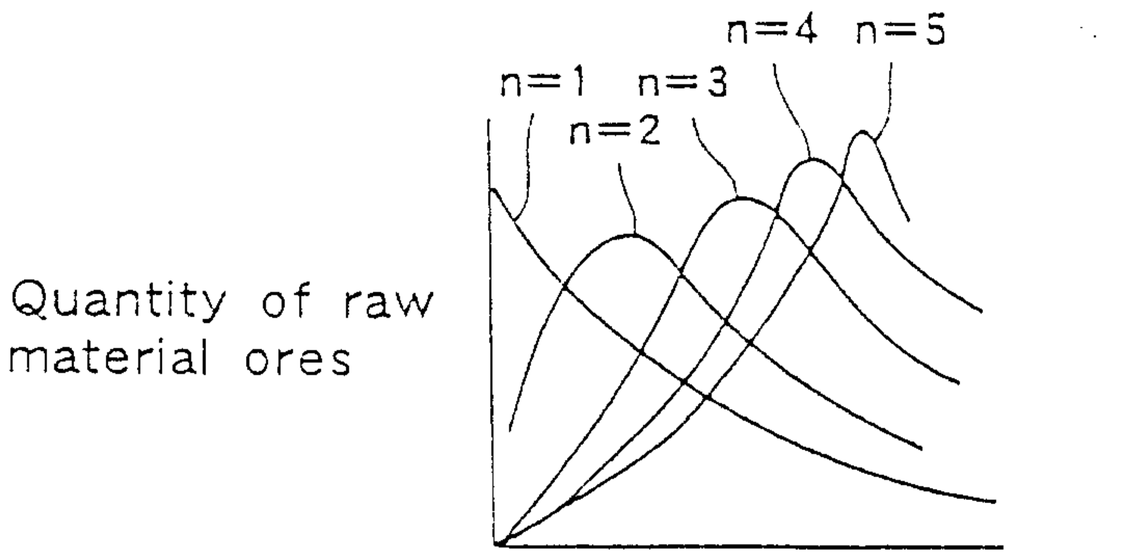
n=1
n=2
n=3
n=4
n=5
Quantity of raw material ores
Residence time of ores in the reactor

Fig. 2

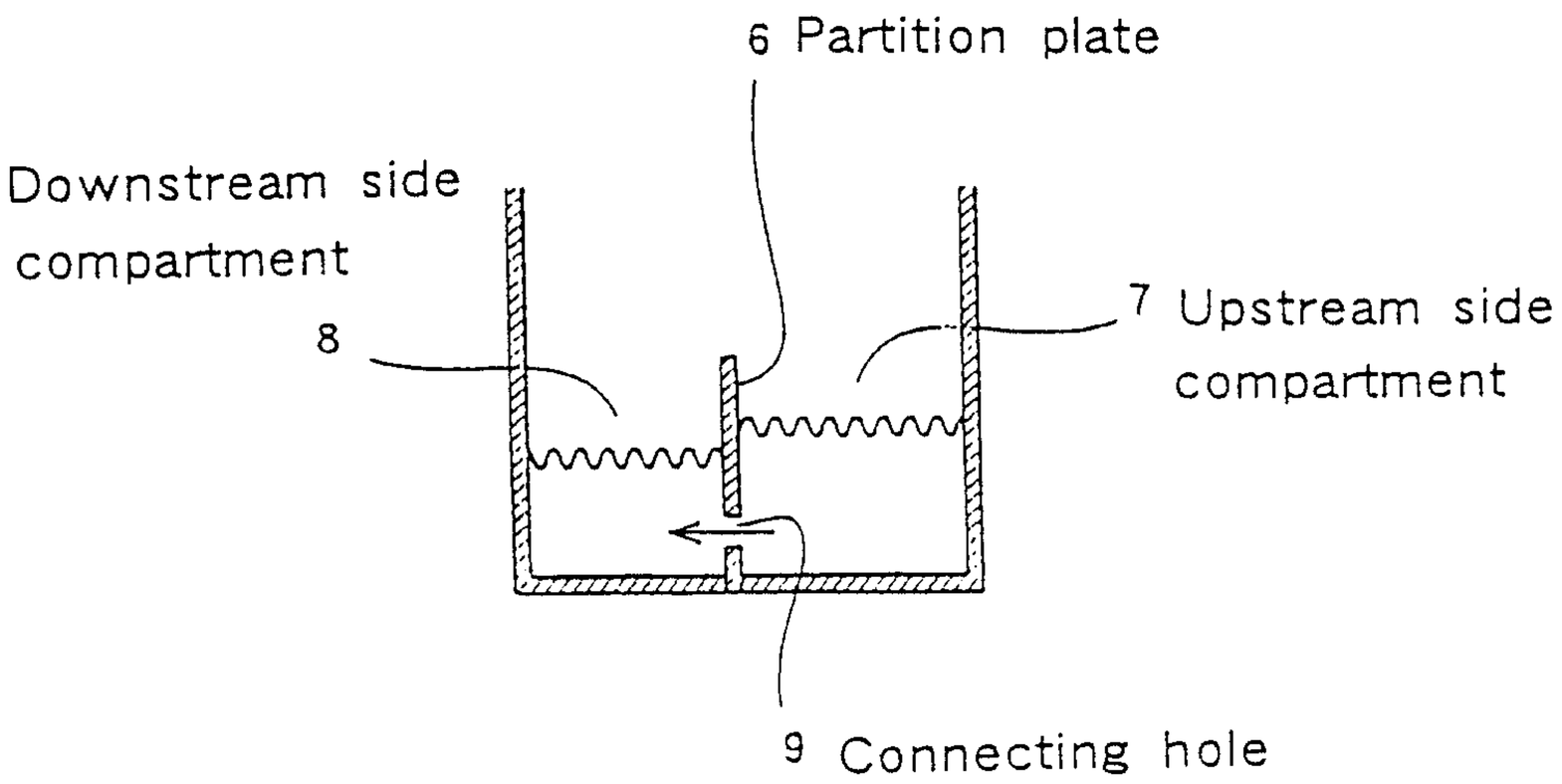
6 Partition plate
Downstream side compartment
8
7 Upstream side compartment
9 Connecting hole

Fig. 3

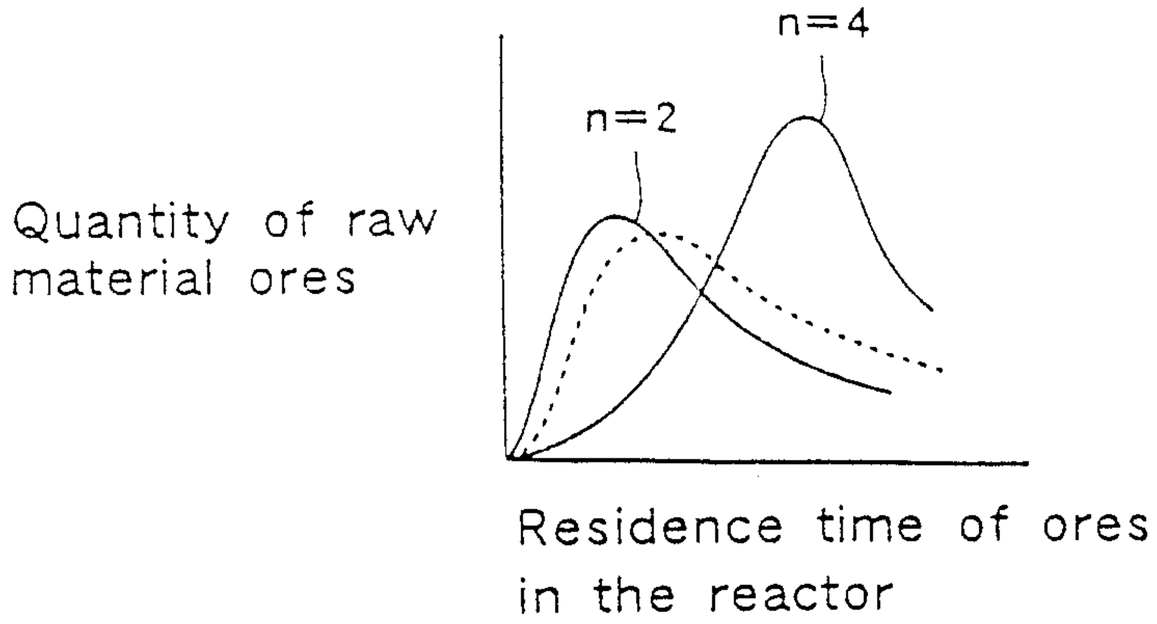
n=4
n=2
Quantity of raw material ores
Residence time of ores in the reactor

Fig. 4

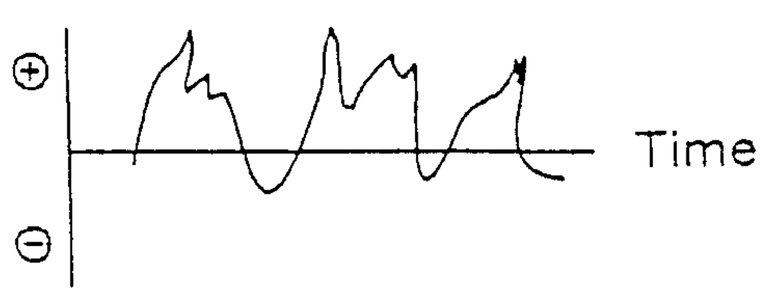
⊕
⊖
Time

Fig. 5

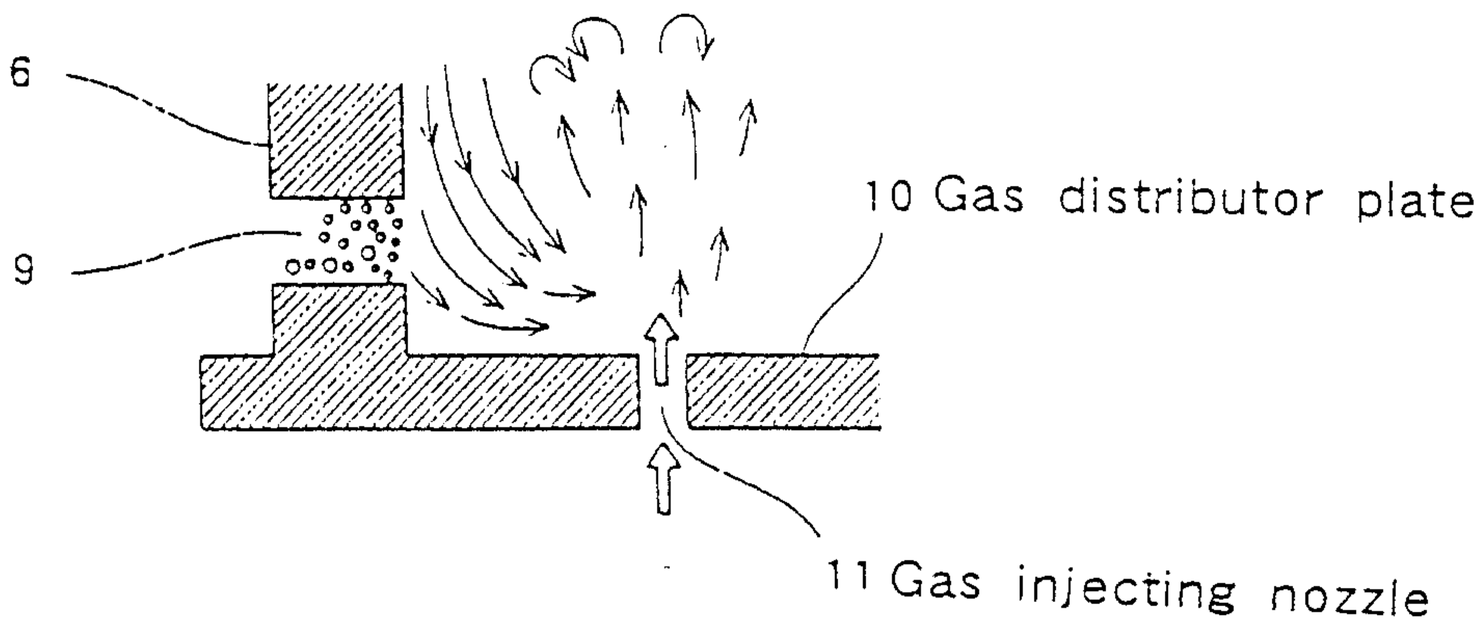

Fig. 6

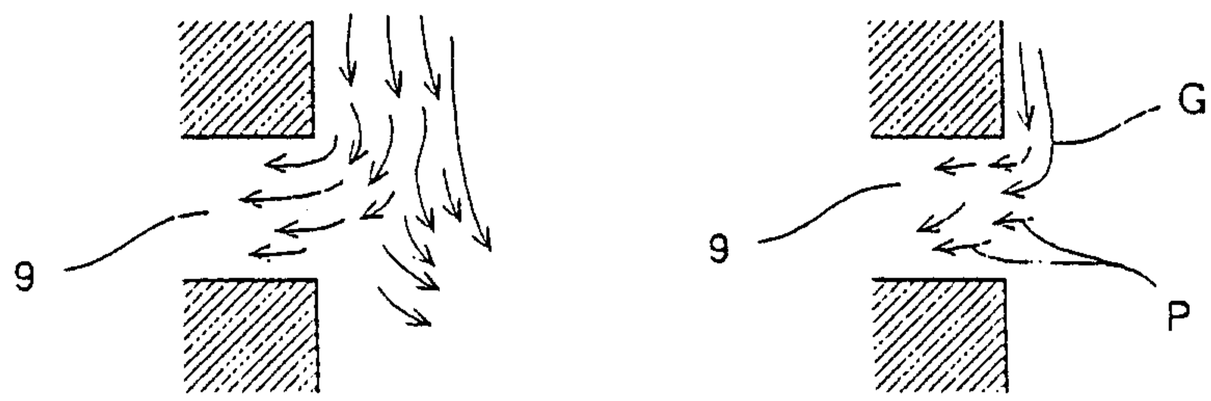

(a) (b)

Fig. 7

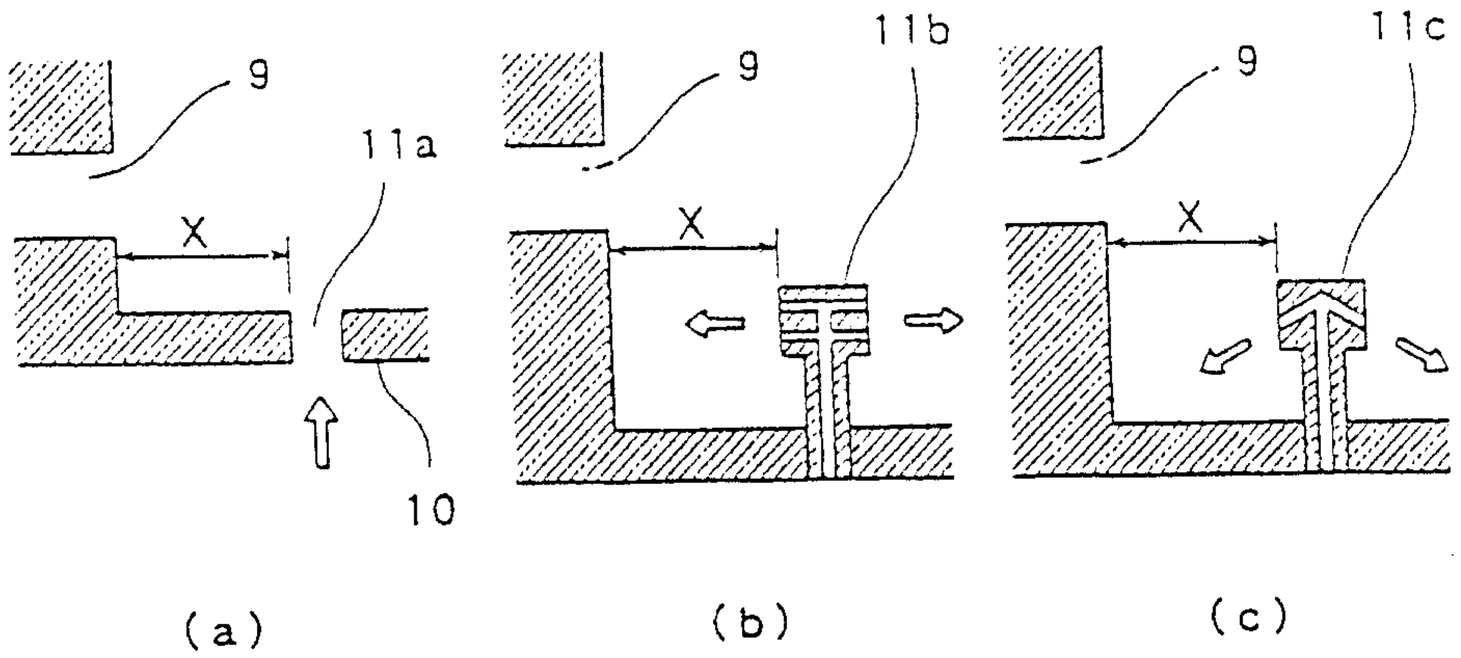
9
11a
X
10
(a)
9
11b
X
(b)
9
11c
X
(c)

Fig. 8

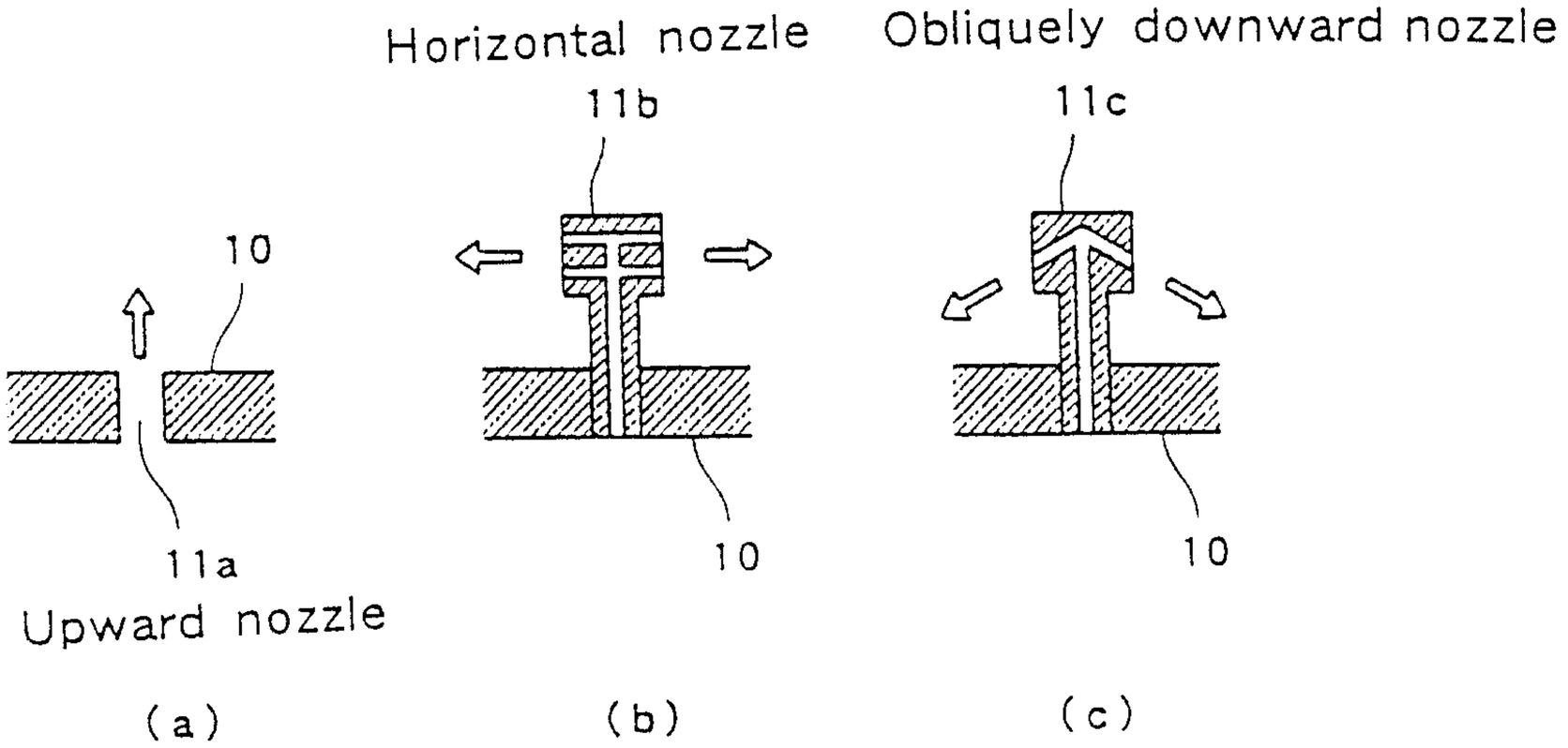
Horizontal nozzle
Obliquely downward nozzle
10
11a
Upward nozzle
11b
10
11c
10
(a)
(b)
(c)

Fig. 9

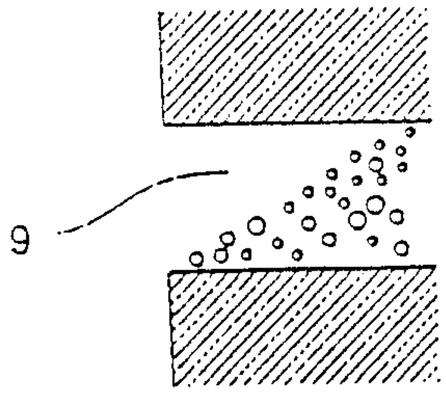

Fig.10

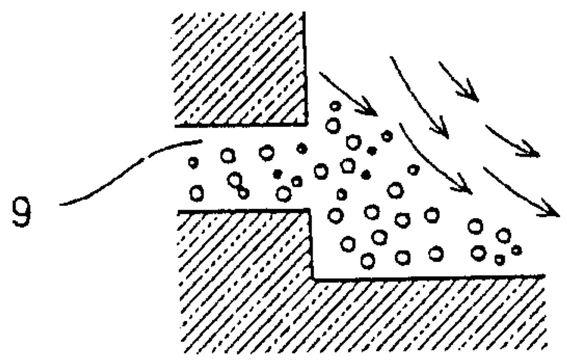

Fig.11

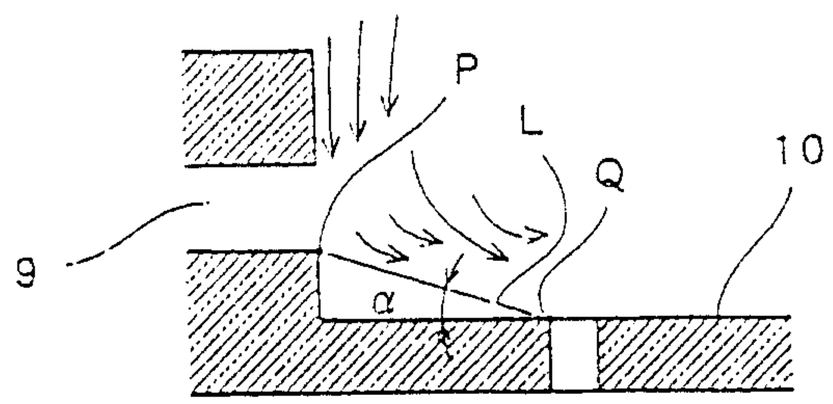

Fig.12

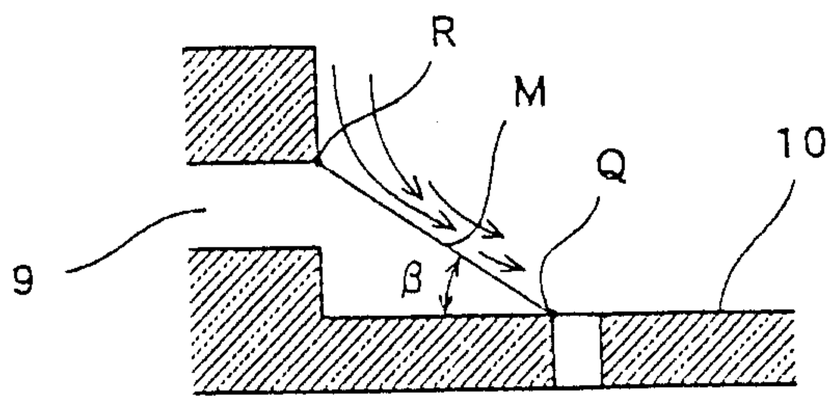

Fig.13

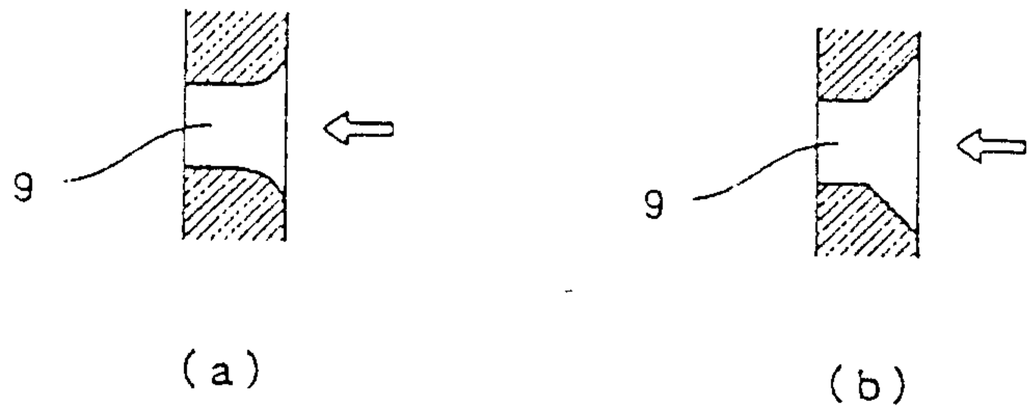

Fig.14

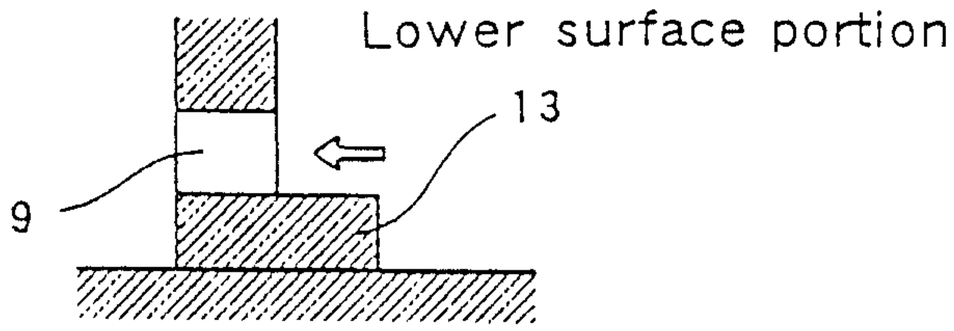

Fig.15

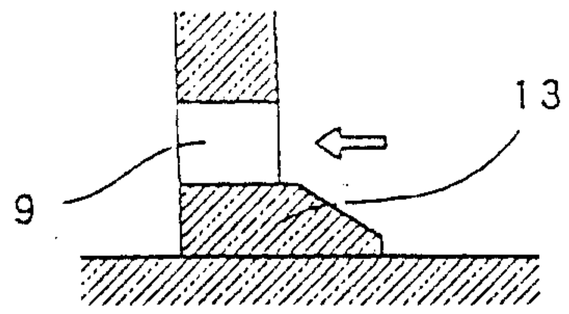

Fig.16

Fig.17

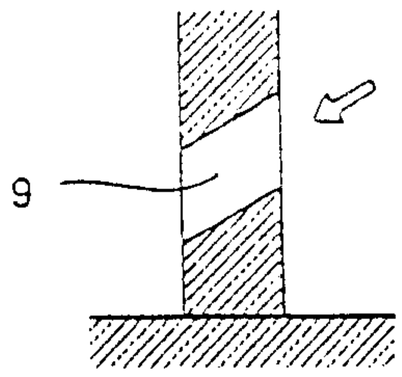

Fig.18

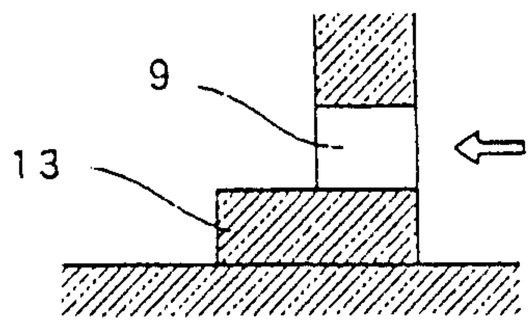

Fig.19

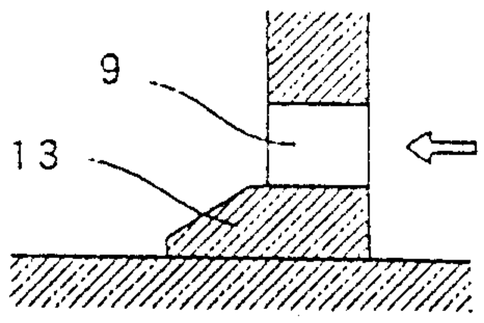

Fig.20

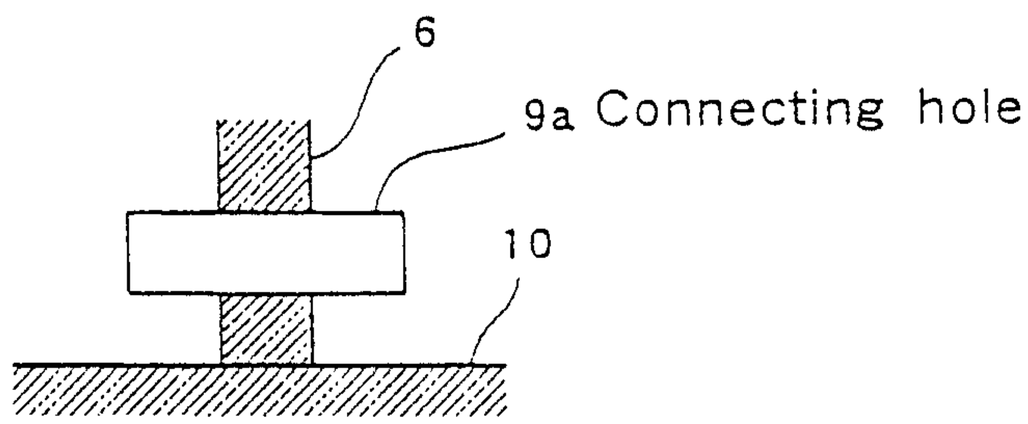

Fig.21

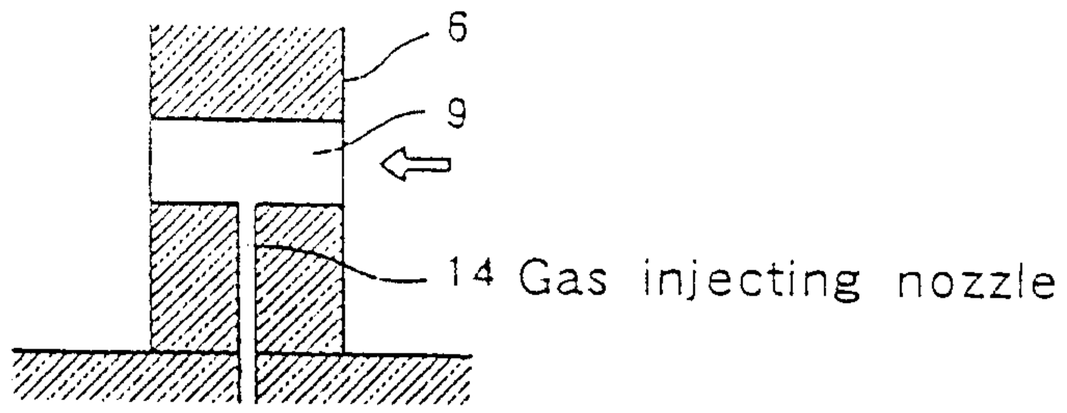

Fig.22

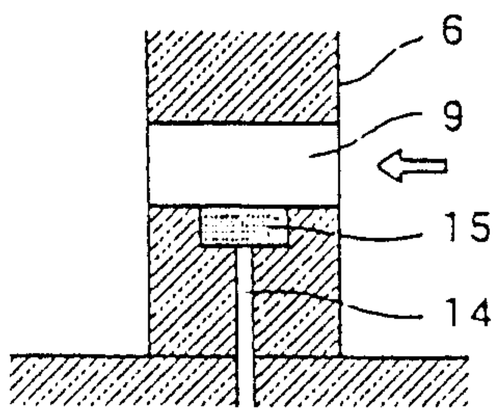

Fig.23

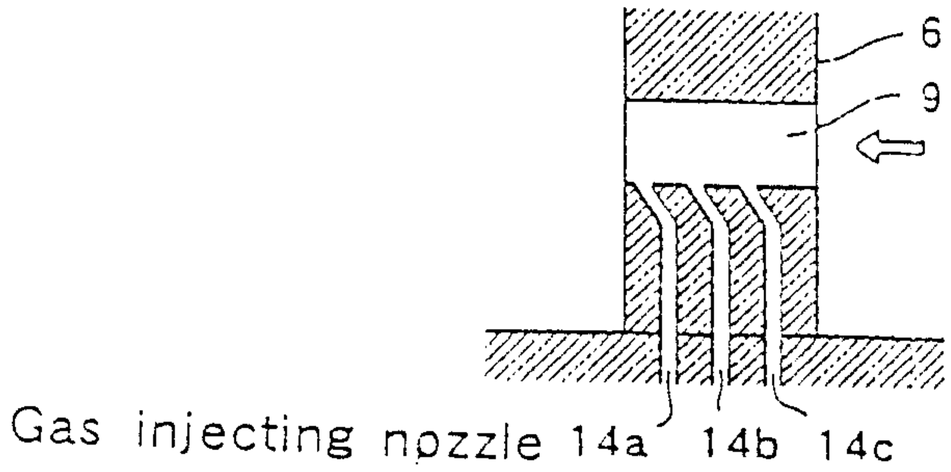
6
9
Gas injecting nozzle 14a
14b
14c

Fig.24

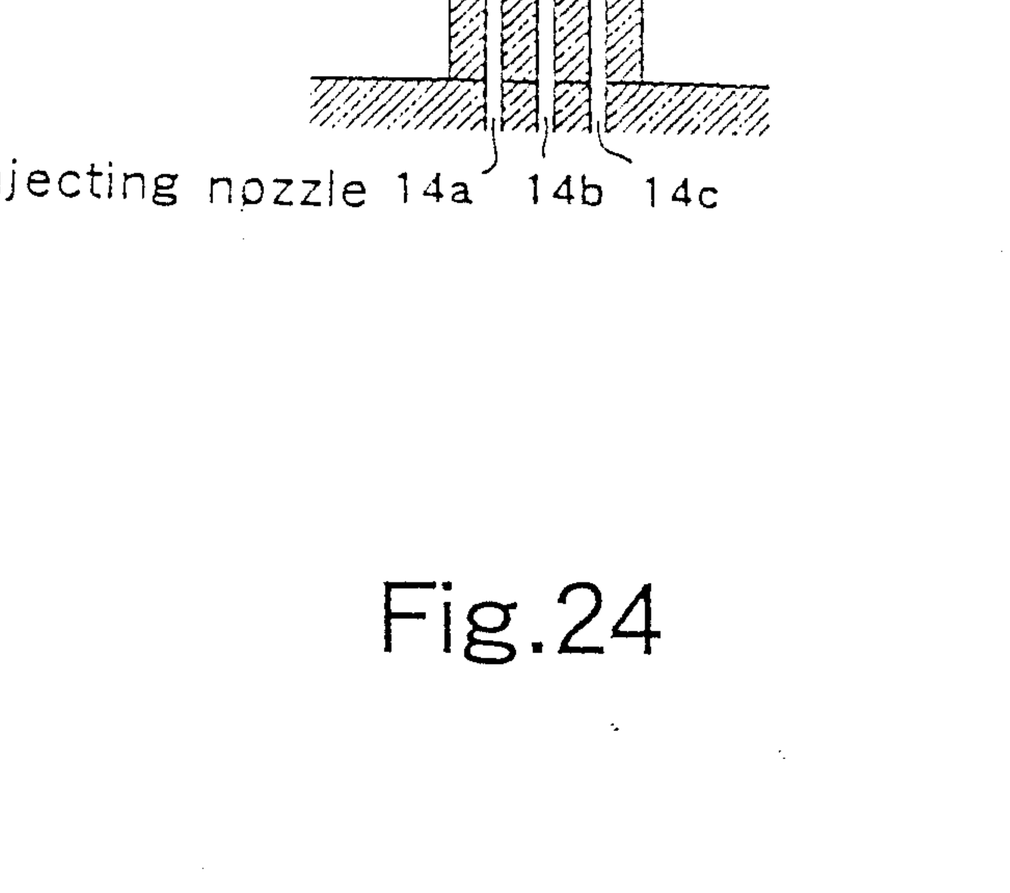
21
26
23
27
26a
26b
26c
26d
26e
22
24
25

Fig.25