United States Patent

Lundin

[15] **3,687,224**

[45] **Aug. 29, 1972**

[54] **MUFFLERS**

[72] Inventor: **Stig Lundin**, Varmdo, Sweden

[73] Assignee: **Svenska Rotor Maskiner Aktiebolag**, Necka, Sweden

[22] Filed: **Jan. 25, 1971**

[21] Appl. No.: **109,420**

[30] **Foreign Application Priority Data**

Feb. 10, 1970 Great Britain.....6,329/70

[52] **U.S. Cl.**.....**181/33 A**, 181/33 K, 181/36 R, 181/61, 181/72

[51] **Int. Cl.**.....**G10k 11/02**, F01n 7/00

[58] **Field of Search**.....181/33 A, 33 K, 61, 62, 72, 181/35 R, 36 R, 36 A, 36 B, 36 D; 417/312

[56] **References Cited**

UNITED STATES PATENTS

1,948,211	2/1934	Fritz	181/33 A X
2,233,804	3/1941	Bourne	181/33 A X
2,629,544	2/1953	Ohmart	181/61 X
3,194,589	7/1965	Kahlbau et al.	181/33 A X

FOREIGN PATENTS OR APPLICATIONS

560,417	7/1958	Canada	181/33 A

Primary Examiner—Richard B. Wilkinson
Assistant Examiner—John F. Gonzales
Attorney—Bauer and Goodman

[57] **ABSTRACT**

In a duct system including a compressor there is provided at the inlet and/or outlet of the compressor a muffler comprising an inner casing and an outer jacket mutually connected solely by elements of an elastomeric material, the casing being connected to the compressor and the jacket to the duct system whereby to prevent oscillations of the casing walls from passing out into the duct system and casing walls from emitting sound waves into the ambient air.

11 Claims, 5 Drawing Figures

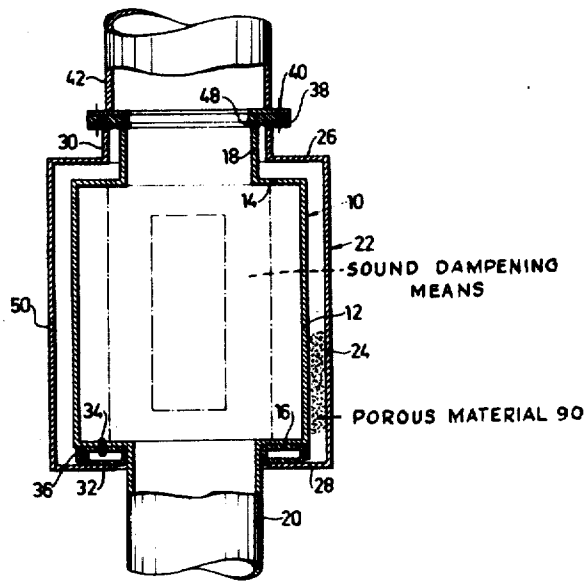

Fig.1

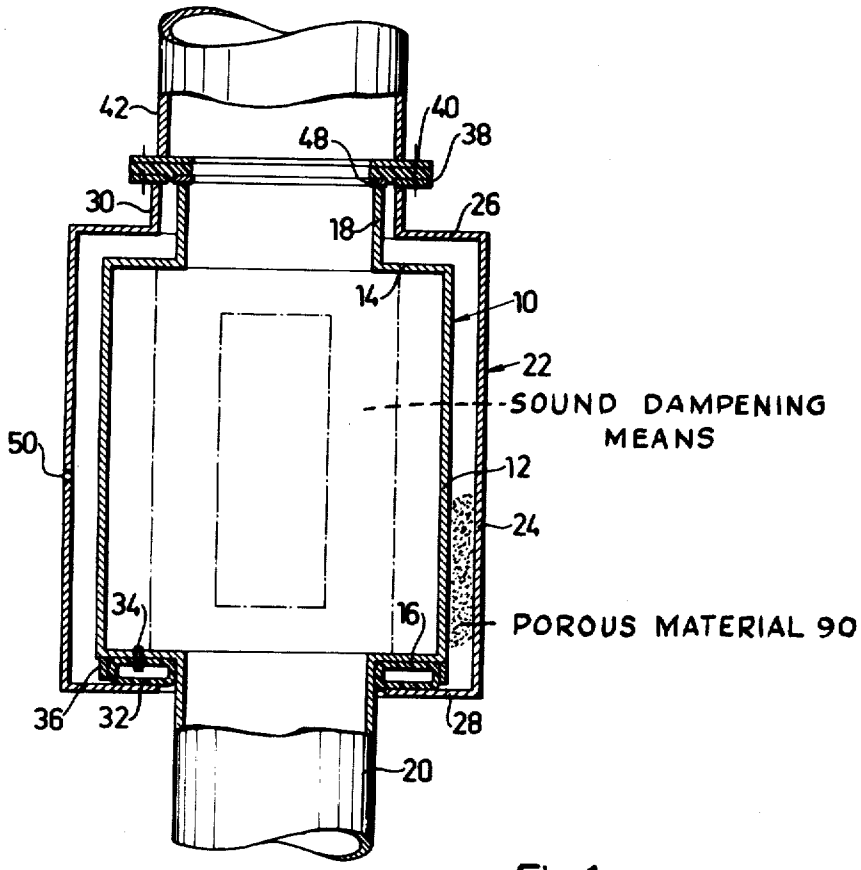
42
40
48
38
30
26
18
14
10
22
SOUND DAMPENING MEANS
50
12
24
34
16
POROUS MATERIAL 90
36
32
28
20

Fig.1a

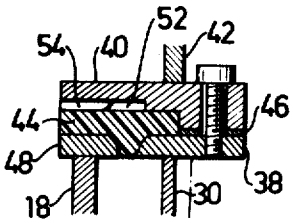
52
54
40
42
44
46
48
38
18
30

Fig. 2a

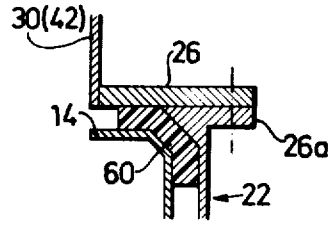

Fig. 2

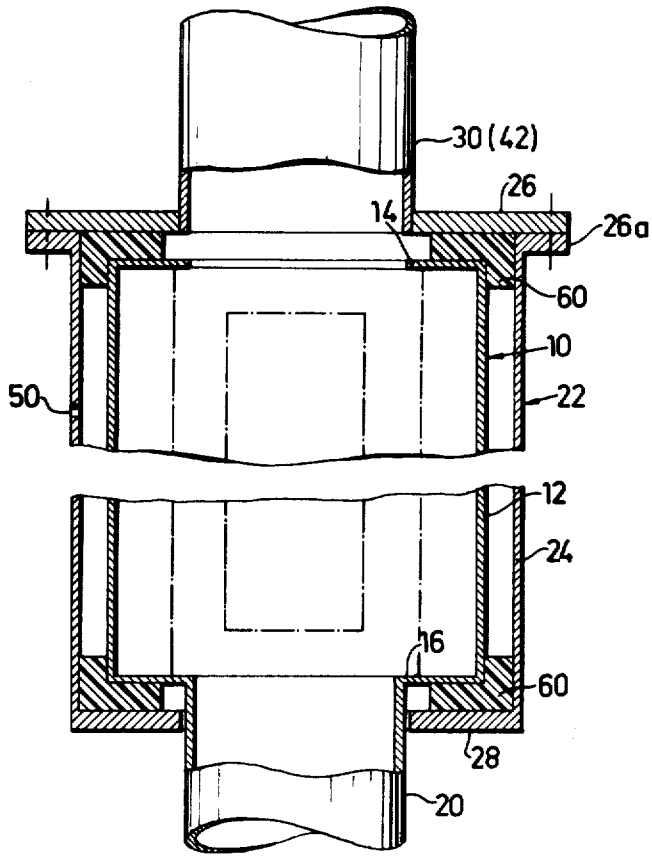

Fig. 3

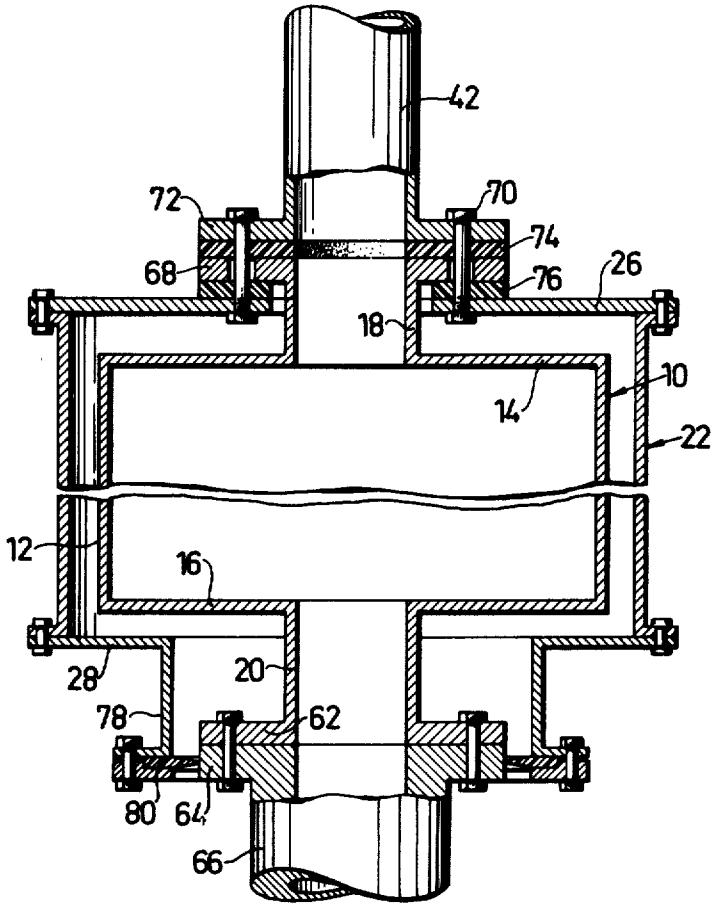

MUFFLERS

This invention relates to industrial systems which include a compressor having its inlet and/or outlet connected through a muffler to a duct system conveying a gaseous working fluid, said muffler comprising a casing connected to the compressor and containing oscillation dampening means and being traversed by the gas.

In, for instance, a pressure air plant the noise produced by the compressor does not consist solely of the sound emanating from the air discharged through the compressor outlet. In fact, the mufflers used nowadays are very effective and dampen the oscillations in the air flow almost completely. However, before the oscillations have been extinguished they have induced oscillations in the walls of the muffler casing so that these walls produce a noise which cannot be dampened by the inserts of the muffler.

In addition, the cooperating mechanical parts of the compressor, the pressure variations within its working chambers and the resulting force variations give rise to audible oscillations in the compressor structure proper which itself emits sound waves into the ambient air. However, the oscillations are also transmitted to the walls of the muffler casing which in turn emit corresponding sound waves.

Thus, the sound or noise emitted by the walls of the muffler casing emanates partly from the air flow and partly from the compressor structure. Since the strength of the emitted noise is substantially proportional to the size of the emitting area and the mufflers are often rather large the noise may be very annoying.

In order to prevent the oscillations of the casing walls from passing out into the duct system it has hitherto been customary to insert a sound barrier device between the muffler and the duct system which latter often has a very large wall area. Such a barrier device usually comprises one or more elastomeric elements elastically connecting the muffler with the duct system.

It is an object of the invention to provide in a plant of the type referred to a muffler which not only dampens the pressure oscillations in the gas flow but also prevents the muffler casing from emitting sound waves into the ambient air and at the same time forms a sound barrier means.

According to this invention in a system of the kind above mentioned, a jacket is located in spaced relation to the muffler casing so as to surround at least the major portion thereof, said jacket being connected to the casing substantially solely by elements of an elastomeric material and additionally being connected to the duct system.

The invention will now be described more in detail and by way of example with reference to the accompanying drawing in which:

FIG. 1 is a longitudinal sectional view of one embodiment of a muffler to be incorporated in a plant according to the invention;

FIG. 1*a* shows a detail of FIG. 1 on a larger scale;

FIG. 2 is a longitudinal sectional view of a second embodiment;

FIG. 2*a* shows a modification of a detail of FIG. 2 on a larger scale;

FIG. 3 is a longitudinal sectional view of a further embodiment.

The muffler shown in FIG. 1 comprises a casing 10 consisting of a cylindrical peripheral wall 12 and annular disc-like end walls 14 and 16 each carrying an axially projecting tubular member 18 and 20 respectively.

The casing 10 is surrounded by a jacket 22 consisting of a cylindrical peripheral wall 24 coaxial with and of greater diameter and longer than the cylindrical casing wall 12, and of disc-like end walls 26 and 28. The upper end wall carries an upwardly projecting tubular member 30 coaxial with and of greater diameter than the tubular casing member 18.

As indicated by dotted lines in FIG. 1 the casing 10 contains sound-dampening inserts which may be of any suitable type.

In the interspace between the lower end walls 16 and 28 of the casing 10 and jacket 22, respectively, there is provided an inflatable annular flexible hose 32. In the embodiment shown the interior of this hose communicates with the interior of the casing 10 through a narrow nipple 34 passing through the casing end wall 16. The space housing the hose 32 is bounded in the radial direction by the tubular casing member 20 and by an annular collar 36 depending from the casing end wall 16.

To the upper edge of the tubular jacket member 30 is secured a flange 38 bolted to a corresponding flange 40 located at the lower edge of a conduit 42 included in a duct system. As is more clearly shown in FIG. 1*a* there is inserted between flanges 38 and 40 a sealing ring 44 of compressible material, the radially outer portion of said ring being clamped between the flanges and compressed to a desired degree determined by the thickness of an annular spacing washer 46 disposed between the flanges outside the sealing ring 44.

At the upper edge of the upper tubular casing member 18 there is provided a flange 48 adapted to cooperate with a radially inwardly projecting portion of the sealing ring 44.

The interspace between casing 10 and jacket 22 not occupied by the hose 32 may be at least partly filled with a sound absorbing material 90.

The muffler illustrated may be used at the outlet of a compressor for instance of the screw rotor type. In such case, the tubular casing member 20 is connected directly to the outlet opening of the compressor housing in any convenient manner while the conduit 42 conveys the compressed gas away for consumption. In this embodiment the jacket 22 is provided with one or more openings 50 so that the interspace between the casing 10 and the jacket 22 is at atmospheric pressure. The openings 50 are small and so formed that substantially no sound can leak out therethrough from the interspace.

During operation of the compressor, the gas pressure inside the casing 10 and conduit 42 would normally tend to separate these two elements with a force substantially proportional to the cross-sectional area of the tubular casing member 18. However, this force is counterbalanced by the hose 32 which has been filled with pressure gas through the nipple 34. Preferably the hose 32 is dimensioned so as to exert a force which slightly overrules the separating force so that the flange 48 of the tubular casing member 30 is pressed against the sealing ring 44.

From FIG. 1*a* it will be seen that the flange **40** is recessed on its underside at **52** and provided with radially extending grooves **54** so that the gas has free access to the upper side of the sealing ring **44**.

The sound waves caused by the pressure oscillations in the compressor outlet are transmitted through the interior of the casing **10** where they are dampened to such a degree that the gas flow leaving the upper tubular casing member **18** does not produce any annoying noise.

However, before the oscillations reach the active portion of the muffler they have induced oscillations in the wall of the tubular casing member **20**. Since the dampening occurs gradually, oscillations are also induced in the walls of the active portion of the muffler particularly at the entrance end thereof.

Further, as mentioned above, noise is produced also in the machine itself and in the present case the oscillations of the compressor housing are transmitted through the walls of the muffler casing **10**.

In order to prevent the oscillations of the compressor from being transferred to the floor it is known to insert elastic pads, such as rubber pads between the base of the compressor and the floor. It is also known to enclose the compressor and its driving motor in a hood or the like of sound-dampening material to reduce the noise emitted by these units directly to the surrounding premises.

Even though such measures considerably reduce the noise, they are often not sufficient to bring the sound intensity or strength down to a tolerable level because as mentioned above, the sound waves are still permitted to pass out through the outlet duct system. However, from FIG. **1** it will be seen that according to the invention there are no rigid connections between the casing **10** and the jacket **22** but only yielding connections or supports represented by the hose **32** and the sealing rings **44**. These two elements are made of rubber or other elastomeric material having a low sound conductivity so that the oscillations of the casing **10** cannot be transferred to the conduit **42** in any appreciable degree. The air in the interspace between the casing **10** and the jacket **22** has in itself sound insulating properties but the insulating effect may be improved by filling the interspace with a porous material permeable to gas such as glass woll, lumps of foamed plastic or the like offering resistance to the small movements of the oscillating air particles. A simple air layer is very effective within a rather small frequency range related to the thickness of the layer, but when the interspace is filled with porous material the insulating effect extends over a wider range.

If the compressor outlet is directed upwardly so that the muffler is orientated as shown in FIG. **1** and the compressor is inoperative, it may be assumed that the flange **40** of the conduit **42** rests with its sealing ring **44** under a certain contact pressure against the flange **48** of the tubular casing member **18**. When the compressor is started and the pressure in the casing **10** and in conduit **42** increases the hose **32** is gradually inflated while at the same time pressure is applied to the upper side of the sealing ring **44**. Therefore, there is never any risk of leakage between the sealing ring **44** and the flange **48** because sufficient contact pressure is always maintained therebetween.

FIG. **2**, in which the same reference numerals are used as in FIG. **1** to indicate corresponding elements, shows a muffler which is of the same general design as the muffler according to FIG. **1**. However, in this case the end wall **26** of jacket **22** is made integral with the conduit **30** and is a separate element from the cylindrical jacket wall **24** but is, however, secured to the wall **24** by means of bolts (not shown) passing through the end wall **26** and a flange **26***a* on the wall **24**.

The end portions of the casing **10** are surrounded by sealing and holding rings **60** of L-shaped cross-section and made of rubber or similar material. When the muffler is being assembled the radial portions of these rings **60** become compressed in axial direction when the end wall **26** is tightened against the flange **26***a*. Due to the properties of rubber the rings **60** will deform in such manner as to be under a certain pressure also at their peripheral cylindrical portions thereby locating the jacket **22** and casing **10** in a radial direction relatively to each other.

The sound insulating capacity of rubber decreases with increasing hardness and compression of the material. If an elastic rubber body is compressed sufficiently strongly it loses its elastic properties and behaves substantially as a rigid body in acoustic respects. Therefore in the mounted condition the sealing rings **60** must not be excessively compressed but on the other hand they must be capable of transmitting the forces holding the casing **10** and jacket **22** together. It is evident that for acoustic reasons it is desirable that the material is as soft as possible and that the loaded surfaces of the rings must be large enough for the specific surface load not to produce excessive compression of the material.

It is to be noted that the rings **60** are compressed in a limited degree only so that they are still elastic and permit a limited relative movement of the jacket and the casing.

FIG. **2***a* illustrates a modified embodiment of the rings **60** and the portions of the jacket and casing cooperating therewith. The conical shape of the contact surfaces results in an increased radial pressure component as compared with the embodiment shown in FIG. **2**.

The muffler according to FIG. **1** is of a somewhat complicated design adapted to solve the severe noise problems appertaining to the outlet of compressors which discharge against a back pressure. The muffler shown in FIG. **2** is of simple and reliable construction and functions very satisfactorily within almost every field of use.

When inserted in a conduit conveying gas of subatmospheric pressure such as in the conduit between a stream condenser and a vacuum pump in a boiler plant, the atmospheric pressure presses the jacket and the casing towards each other (the reversal of the conditions in a high pressure system). In order to obviate excessive compression of the loaded upper sealing ring **60**, this ring may be given a suitably large area obtained for instance by increasing the outer diameter of the muffler and of the ring so that the specific surface pressure becomes reasonable.

Thus, if a muffler according to FIG. **2** is used in a conduit conveying gas of a pressure higher or lower than the atmospheric pressure, one of the sealing rings

60 will take up a higher load than the other during operation. Therefore, in practice, it is often advantageous to use rings of different design and to dimension and shape the more heavily loaded ring such that it substantially alone holds the casing and jacket in their correct relative positions during operation, while the other ring may consist of an O-ring or similar simple sealing ring since during operation it has substantially no other purpose than to prevent leakage of sound waves from the interspace between the casing and the jacket. However, when the muffler is assembled this other ring is also compressed to a certain extent but this compression is reduced during operation due to the slight relative movement imparted to the two muffler elements by gas pressure.

The casing and the jacket may be made from any suitable material such as metal or plastics material and they may each be composed of several parts joined together by welding or by any other convenient method. Dependent on the pressure and temperature of the gas, it may sometimes be necessary to use metal at least for the casing. At high gas temperatures it may also be necessary to cool the sealing and supporting elastomeric elements. Thus, means may be provided for circulating pressurized cooling air through the hose 32 in which case the nipple 34 is omitted.

In the embodiment shown in FIG. 3 the lower tubular casing member 20 is provided with a flange 62 which is bolted to a flange 64 on the compressor outlet 66. Also the upper tubular casing member 18 is provided with a flange 68 which is clamped by clamping bolts 70 between a flange 72 on the conduit 42 and the flangelike inner portion of the upper end wall 26 of the jacket 22 with the interposition of a gasket or sealing ring 74 and a resilient ring 76, both rings 74 and 76 being made from elastomeric material such as silicone rubber.

Flanges 68 and 72, jacket end wall 26 and rings 74 and 76 are provided with holes for the clamping bolts 70, the diameter of the holes of the casing flange 68 being substantially larger than the diameter of the bolts 70 so that there is no contact between this flange and the bolts. Thus, the flange 68 is connected to the conduit 42 and jacket 22 solely through the elastomeric rings 74, 76.

The lower end wall 28 of the jacket 22 is provided with a flanged collar 78 which carries an elastomeric ring 80 making contact with the peripheral face of the flange 64 on the compressor outlet 66 in order to insulate acoustically the interspace between the casing 10 and the jacket 22 from the ambient atmosphere.

In the embodiments shown the interspace communicates with the surrounding atmosphere which in most cases is favorable. Thus, when the muffler is used at the outlet of a compressor the casing is made so as to withstand the gas pressure in the system while the jacket may be designed without paying any regard to internal pressure. However, it is also possible to connect the interspace to the high pressure conduit downstream of the muffler where the oscillations in the gas flow are extinguished in which case the casing is relieved of load from the gas pressure while the jacket must be capable of withstanding such load. It is evident that since the casing is the smaller one of the two muffler elements its wall need not be so thick as the walls of the jacket in order to withstand a predetermined internal gas pressure. Therefore, a muffler of the lastmentioned type in which the jacket is loaded by internal gas pressure will of necessity be rather heavy and expensive.

According to the invention the compressor is accoustically insulated from the rest of the plant by its muffler or mufflers and there is no need of a separate sound barrier device. In plants in which both the inlet and the outlet of the compressor are connected to conduits, such as refrigerating plants, it is necessary to provide a muffler at the inlet as well as at the outlet of the compressor in order to prevent oscillations from passing over to the duct system while in other cases it may be sufficient to provide a muffler either at the inlet or at the outlet.

What we claim is:

1. A system including a compressor having at least one of its inlet and outlet connected through a muffler to a duct system conveying a gaseous working fluid, said muffler comprising a casing connected to the compressor and containing oscillation dampening means and being traversed by the gaseous working fluid, said system further including a jacket located in spaced relation to said muffler casing so as to surround at least the major portion thereof; and connecting means connecting said jacket to said casing substantially solely by elements of an elastomeric material and additionally connecting said jacket to said duct system.

2. A system according to claim 1 wherein said elements of elastomeric material additionally serve as sealing elements for the interspace between said casing and jacket.

3. A system according to claim 1 wherein the interspace between said casing and jacket is at least partially filled with a porous material permeable to gas.

4. A system according to claim 1 wherein said casing and said jacket are substantially cylindrical and include end walls provided with openings for the flow of said gaseous working fluid and wherein at least one of said elements of elastomeric material is adapted to hold said casing and said jacket together elastically both in axial and in radial directions.

5. A system according to claim 1 wherein said elements of elastomeric material include a pneumatic device for at least partially counter-balancing external forces arising from pressure differences and tending to move said casing and said jacket relatively to each other.

6. A system according to claim 5 wherein said pneumatic device include a sealed chamber located in said interspace between two opposed wall portions of said casing and jacket, respectively and extending transversely of the direction of the forces, said sealed chamber including means connecting same to a pressure source providing a pressure acting to oppose said forces.

7. A system according to claim 6 wherein said sealed chamber is adapted to communicate with the high pressure side of the duct system while the remainder of said interspace between said casing and jacket is under atmospheric pressure.

8. A system according to claim 6 wherein said sealed chamber comprises at least one inflatable member.

9. A system according to claim 8 wherein said inflatable member comprises an annular flexible hose.

10. A system according to claim 4 wherein said duct system, said casing and said jacket are provided with attachment flanges, said connecting means clamping the casing flange between the duct system flange and the jacket flange with the interposition therebetween solely of said elements of elastomeric material.

11. A system according to claim 10 wherein said flanges and said elements of elastomeric material are provided with holes for receiving clamping bolts, and wherein the diameter of the holes of the casing flange is substantially larger than the diameter of said clamping bolts.

* * * * *