Sept. 29, 1970 J. L. McCONNELL Re. 26,957

ELECTRONIC TIMER ESCAPEMENT AND COIN COUNTER

Original Filed May 31, 1966 5 Sheets-Sheet 1

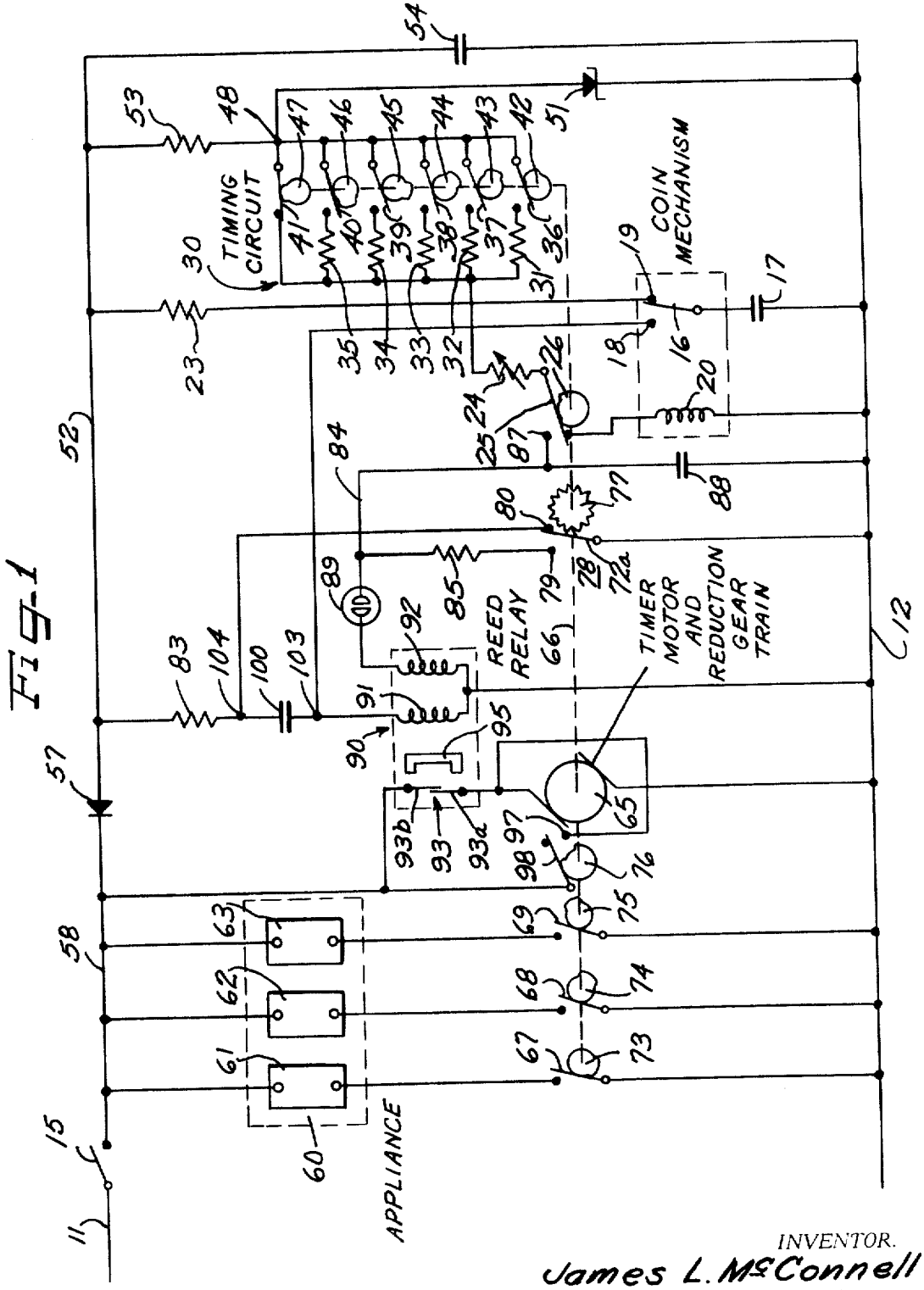

Fig-1

INVENTOR.
James L. McConnell

Hill Sherman Meroni Gross & Simpson

ATTORNEYS

BY

ELECTRONIC TIMER ESCAPEMENT AND COIN COUNTER

Original Filed May 31, 1966 5 Sheets-Sheet 2

Fig-2

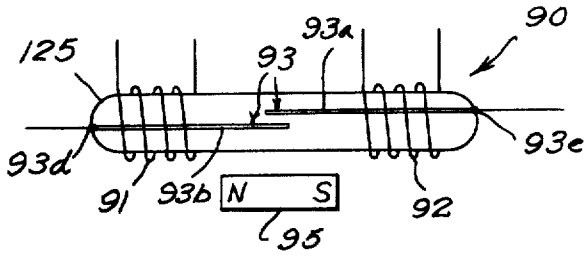

Fig-3

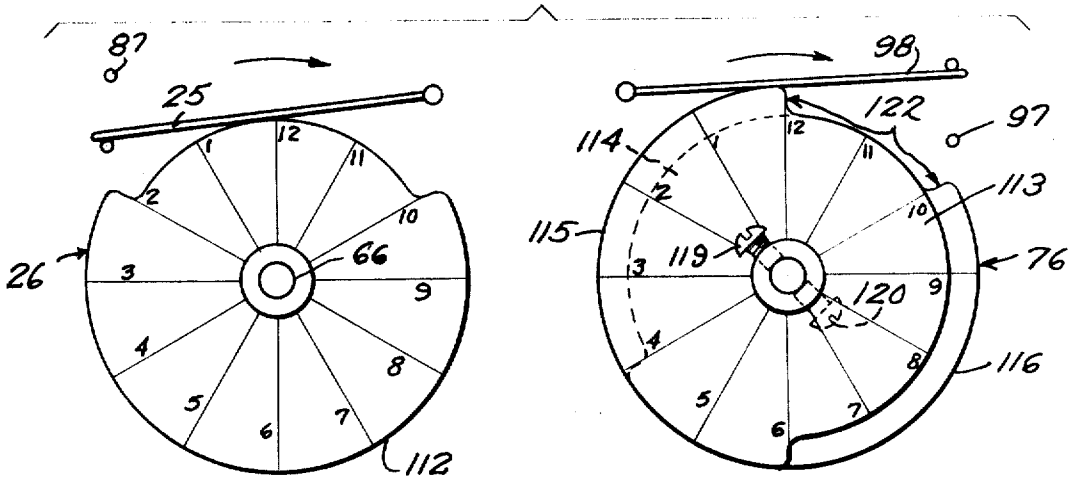

INVENTOR.
James L. McConnell

Hill Sherman Meroni Gross & Simpson

BY ATTORNEYS

ELECTRONIC TIMER ESCAPEMENT AND COIN COUNTER

Original Filed May 31, 1966 5 Sheets-Sheet 3

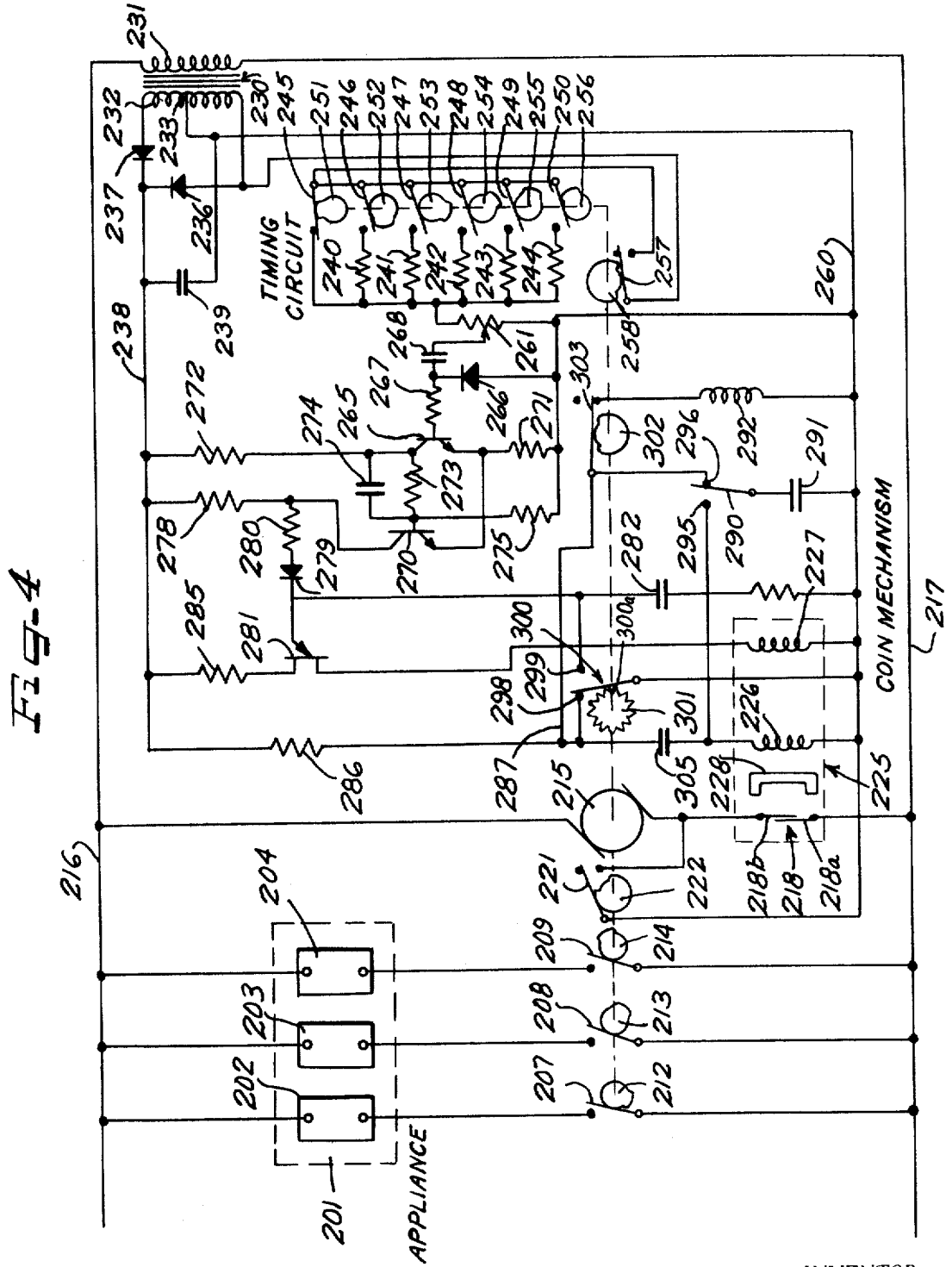

Fig-4

INVENTOR.
James L. McConnell

Hill Sherman Meroni Gross & Simpson

ATTORNEYS

BY

ELECTRONIC TIMER ESCAPEMENT AND COIN COUNTER

Original Filed May 31, 1966 5 Sheets-Sheet 4

Fig-5

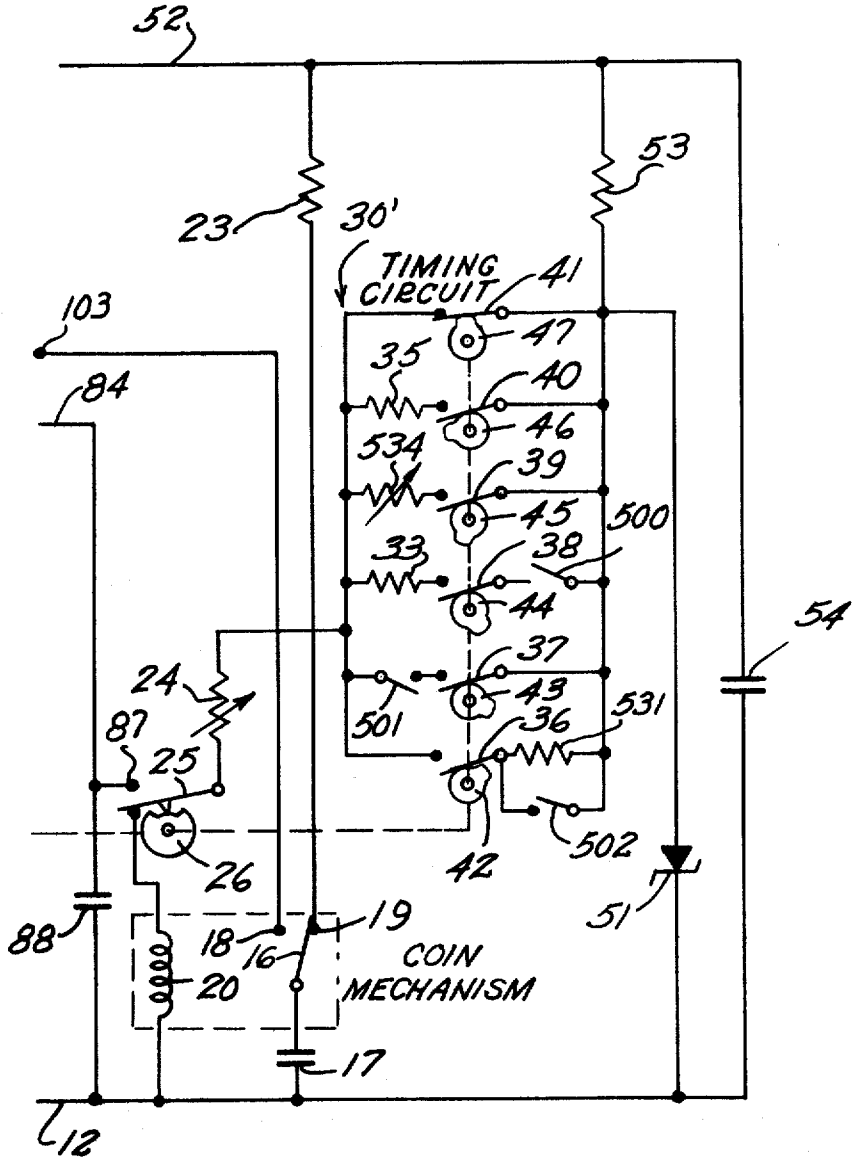

INVENTOR.
James L. McConnell

BY Kill, Sherman, Meroni, Gross & Simpson ATTORNEYS

ELECTRONIC TIMER ESCAPEMENT AND COIN COUNTER

Original Filed May 31, 1966 5 Sheets-Sheet 5

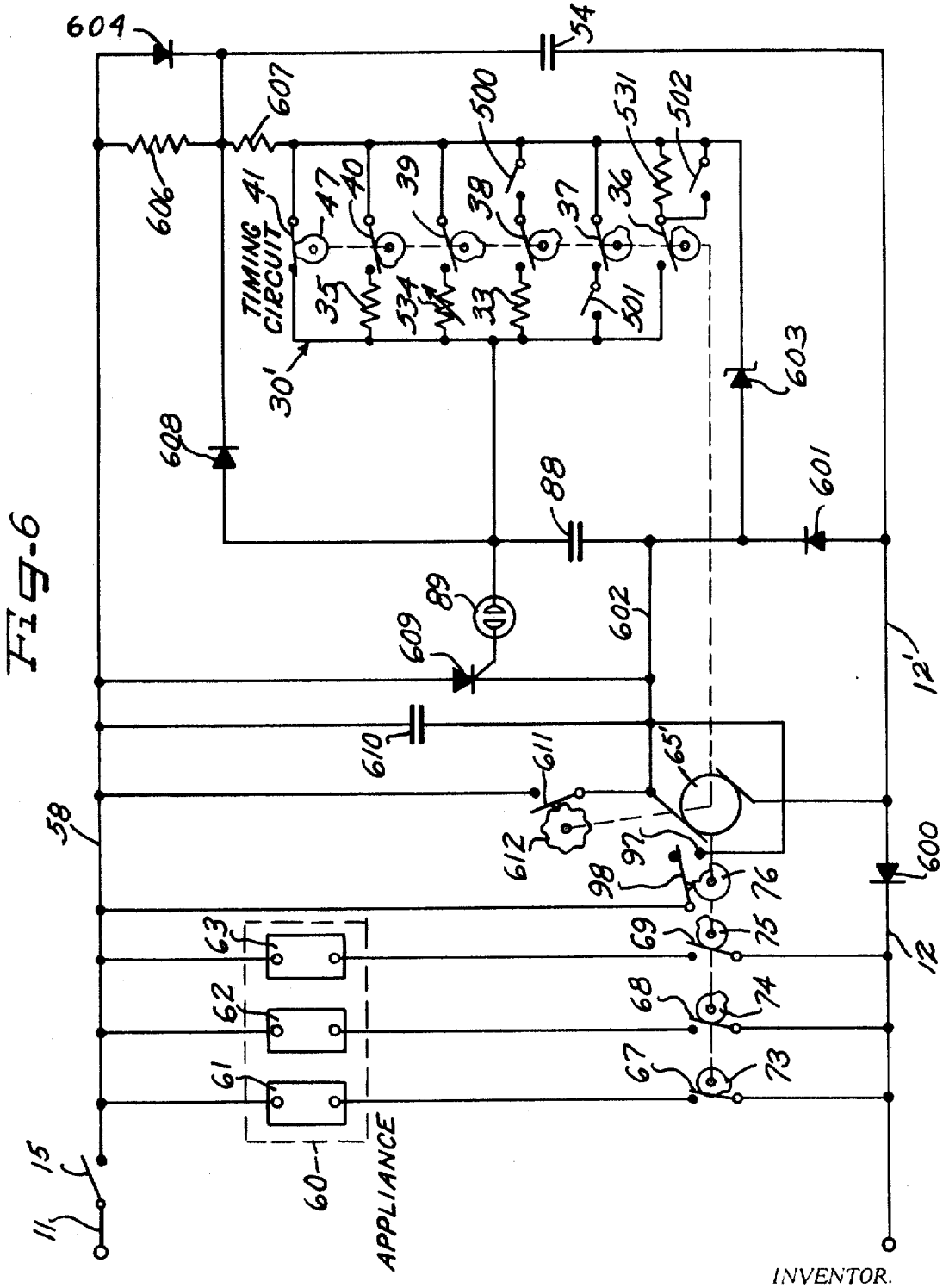

Fig-6

INVENTOR.
James L. McConnell

BY Hill, Sherman, Meroni, Gross & Simpson ATTORNEYS

United States Patent Office

Re. 26,957
Reissued Sept. 29, 1970

26,957

ELECTRONIC TIMER ESCAPEMENT AND COIN COUNTER

James L. McConnell, St. Joseph, Mich., assignor to Whirlpool Corporation, Benton Harbor, Mich., a corporation of Delaware

Original No. 3,360,092, dated Dec. 26, 1967, Ser. No. 559,649, May 31, 1966. Application for reissue Oct. 24, 1968, Ser. No. 785,818

Int. Cl. G07f 5/10

U.S. Cl. 194—9 43 Claims

Matter enclosed in heavy brackets [ ] appears in the original patent but forms no part of this reissue specification; matter printed in italics indicates the additions made by reissue.

ABSTRACT OF THE DISCLOSURE

A control circuit for home and/or coin-operated appliances such as washing machines, dry cleaning machines and clothes dryers which require different time intervals to accomplish respective individual functions wherein an electronic control circuit periodically energizes a motor for incremental rotation and wherein the periods between such motor energizations are varied. A pulse-generating circuit is combined with a sequential controller so that the width of the pulses is adjustable to provide variable sequential timing.

This is a continuation-in-part application of Serial No. 373,157 filed June 8, 1964, now forfeited.

This invention relates generally to a control circuit for sequencing the operation of appliances and the like wherein a plurality of functions are to be carried out for respective time periods depending upon the type of appliance or the type of load to be supplied to the appliance. The invention is particularly intended to provide a control circuit of a basic design which is adaptable to the control of a line of home and/or coin-operated appliances such as washing machines, dry cleaning machines, and clothes dryers which require different time intervals to accomplish respective individual functions.

In appliance control circuits of the type employing a series of timing cams, it has heretofore been common practice to manufacture a number of different cams for the various time intervals involved in the sequencing of the various types of appliances. As appliances become more complex and new types of appliances are added to a manufacturer's line, the number of different cams which must be produced has also increased. In an embodiment of the present invention a basic set of actuating cams is provided which may be moved at different rates at different parts of an operating cycle so as to provide any desired combination of timing sequences. The particular timing sequences for different appliances or for different operating cycles of a given appliance may be very simply determined, for example by the selection of particular resistance values in a bank of timing resistors which control the timing of the successive steps in an overall cycle of operation.

It is therefore an object of this invention to provide a simple and economical appliance control circuit which is readily adapted to provide a variety of different timing sequences.

It is a further object of the invention to provide a timing control circuit which is also capable of performing a coin counting function in coin operated appliances.

Another object is to provide an appliance control circuit having a high degree of flexibility as to available timing cycles and which is readily equipped with means for selecting different timing sequences.

Still another object of the invention is to provide a combination timing and coil counting circuit which is readily adjusted so as to be actuated by different numbers of coins.

Yet another object of the present invention is to provide a basic sequential timer control which can be used to control the operation of various types of appliances and/or machines.

Still another object of the present invention is to provide a sequential timer control which can be adapted to condition sensing devices, for example, water level sensing devices, temperature sensing devices and pressure sensing devices, which devices will coact with the sequential timer control to control the operation of the apparatus being controlled.

A still further object of the present invention is to provide simple and efficient electronic switching means to control the energization of a drive motor.

In the past, many appliances have been sequenced by means of a relatively expensive timing control requiring a high quality motor that would not vary appreciably in speed. Also, if the appliance was to be activated by the insertion of one or more coins, a separate coin counting and coin rejection control circuit was required.

A feature of the present invention resides in the provision of an appliance control circuit which employs a relatively inexpensive shaded pole motor.

Another feature of the invention involves the provision of an appliance control circuit having a timing mechanism which is advanced a predetermined increment in response to each coin inserted into a coin mechanism and which automatically begins its normal timing cycle after a predetermined number of coins have been received, and which at the end of the sequential control cycle is automatically reset to a predetermined position in readiness for a subsequent coin counting cycle.

A further important feature of this invention involves the use of a pulse generating circuit in combination with a sequential controller wherein the width of the pulses is adjustable to provide variable sequential timing. The pulse width may be selected by an infinitely adjustable control operable by the user, if desired.

Another feature of the present invention is the adaptation of one or more condition sensing devices which are connected in circuit with an electronic timing circuit to coact therewith thereby sequencing the apparatus under control as a function of time as well as a function of one or more preselected conditions.

Yet another feature of the present invention is the use of a silicon controlled rectifier connected in series with a timer drive motor to initiate energization thereof.

These and other objects, features and advantages will become more fully realized and understood from the following detailed description when taken in conjunction with the accompanying drawings in which like reference numerals through the various views of the drawings are intended to designate similar elements or components and wherein:

FIGURE 1 is a schematic diagram showing an appliance control circuit in accordance with this invention;

FIGURE 2 is a detailed view showing the construction of a reed switch which is used in the control circuit of FIGURE 1;

FIGURE 3 is a detailed view showing the relation between the coin counting cam and the end-of-cycle resetting cam in the control circuit of FIGURE 1;

FIGURE 4 is a schematic diagram illustrating a modified form of appliance control circuit in accordance with the present invention;

FIGURE 5 is a partial schematic diagram illustrating a modified form of the electric timing circuit shown in FIGURE 1; and

FIGURE 6 is a schematic diagram illustrating a modified form of the motor energizing circuit of FIGURE 1.

The appliance control circuit shown in FIGURE 1, is designed to be energized by a source of alternating current through a pair of conductors **11** and **12**. A main switch **15** is closed to place the control in condition for operation; however, in the illustrated embodiment a predetermined number of coins must be inserted into a coin mechanism after closure of switch **15** before the control begins its timing cycle.

The insertion of each coin of the required denomination may momentarily actuate a switch **16**. The switch **16** serves to momentarily connect a capacitor **17** with a capacitor discharge circuit associated with stationary contact **18** of the switch and then to reconnect the capacitor **17** with its charging circuit extending through resistor **23** to stationary contact **19** of the switch.

A coin reject device is controlled by a solenoid **20**. So long as the solenoid **20** is energized, coins are accepted and the switch **16** may be actuated by inserted coins. The solenoid energizing circuit extends through a variable resistor **24** and is controlled by a switch **25**. Each actuation of coin operated switch **16** causes an incremental rotation of cam **26** until a point is reached where cam **26** shifts switch **25** to its upper position to deenergize solenoid **20** and thus to cause any further coins to be returned without actuating coin switch **16**.

With the actuation of switch **25** to its upper position by cam **26**, a timing circuit **30** becomes effective. The timing circuit **30** comprises a plurality of resistors **31–35** and a plurality of sequentially operated switches **36–41** which are successively closed by respective sequencing cams **42–47**. Connected to a common circuit point **48** of the switches **42–47** is a Zener reference diode **51** which serves to determine the input voltage to the timing circuit **30**. D.C. line **52** is connected to circuit point **48** through a resistor **53**. A filter capacitor **54** is connected between the lines **12** and **52** to eliminate unwanted variations in the D.C. supply. The line **52** is connected to supply line **11** through a rectifier **57**, line **58** and switch **15**.

An appliance is diagrammatically indicated in FIGURE 1 by a dash line rectangle **60** and is indicated as having a series of electrically operated devices **61–63** for sequential activation during a cycle of operation of the appliance. A shaded pole motor is indicated at **65** for driving an output shaft represented by dotted line **66**. The electrical devices **61–63** may comprise motors, pumps, relays and the like, and have electrical energizing circuits controlled by respective sequentially actuated switches **67–69**. Mounted on the output shaft **66** of the motor **65** are cams **73–76** which control the respective switches **67–69**.

A toothed camwheel **77** is also driven by the output shaft **66** and serves to provide for an intermittent energization of the motor **65** during the timing cycle. During each increment of rotation of the output shaft **66** by the motor **65** a tooth of camwheel **77** shifts switch arm **72a** to switch **78** to the left to engage stationary contact **79** and then allows the switch arm to return to its initial right-hand position (under the impetus of suitable spring means, not shown) where it engages stationary contact **80**. The contact **80** is connected to the line **52** through a resistor **83**, while the contact **79** is connected to a line **84** through a resistor **85**. The line **84** connects with a stationary contact **87** of the switch **25**, and also with capacitor **88** which is connected with the timing circuit **30** when switch **25** is actuated at the end of the coin counting cycle. A neon lamp **89** is coupled to capacitor **88** in a starting circuit and is arranged to conduct when the voltage across capacitor **88** reaches a predetermined value. The rate of charging of the capacitor to the predetermined voltage value is determined by the timing circuit **30**.

A relay device generally designated by reference numeral **90**, has connected thereto a pair of windings **91** and **92** for controlling actuation and deactuation of a reed switch **93** which is in a motor energizing circuit. The details of construction of a suitable reed switch are indicated in FIGURE 2. As there indicated, the reed switch **93** may comprise a pair of reed-like contact arms **93a** and **93b** of magnetically soft material which are magnetized and close when subjected to a magnetic field of sufficient intensity produced by one of the windings **91** and **92**. The arms **93a** and **93b** may be of a spring material and rigidly fixed at **93c** and **93d** so as to automatically return to the open condition shown in FIGURE 2 when the attracting force therebetween is removed.

The magnet **95** provides a magnetic field of insufficient strength to actuate the switch **93**, but of sufficient strength to maintain the arms **93a** and **93b** in engagement once the arms are actuated to closed position by energization of one of the windings **91** and **92**.

The contact arms **93a** and **93b** may be released from their actuated condition by energization of winding **91** with current of polarity to produce a magnetic field opposing that of the bias magnet **95** in the region of the contact arms and of amplitude to produce a magnetic field substantially cancelling the magnetic field produced by the bias magnet **95** in the contact arms.

The motor **65** has one lead thereof connected to the arm **93a** of the switch **93** and also to a contact **97** of a switch **98**, while the other lead of the motor **65** is connected to the line **12**. The switch **98** is connected to the arm **93b** of the switch **93** and to the line **58** to apply power therefrom to the motor **65** during predetermined times.

The pair of magnetic coils **91** and **92** have one end thereof connected to the line **12**, while the other end of the magnetic coil **92** is connected to one end of the discharge device **89**, and the other end of the magnetic coil **91** is connected to the resistor **83** through a capacitor **100**. The capacitor **100** is shown connected to a pair of circuit points **103** and **104** which are connected to contactors **18** and **80** respectively.

The appliance **60** is readied for operation when the switch **15** is closed applying power from the line **11** to the line **58** and through the rectifier **57** to the line **52**. The electrical devices **61–63** of the appliance **60** will remain inoperative until the switches **67–69** are actuated at various time intervals by the sequencing cams **73–75**. The pulsating D.C. applied to the line **52** will charge capacitor **54** to maintain a relatively constant D.C. voltage between lines **12** and **52**. During the preconditioning time before and during inserting of coins or the use of other actuating means, the capacitor **17**, connected to the contact **19** through the switch **16**, is charged to the D.C. voltage of line **52** through the resistor **23**. Also during the preconditioning time, the electromagnetic device **20** is energized through the switch **25**, resistor **24**, variable timing circuits **30** and resistor **53**, thereby allowing the switch **16** to be actuated by a coin. It should be noted at this time that one of the switches **36–41** must be closed at all times. At this time capacitors **88** and **100** are substantially fully discharged.

By way of example and not by way of limitation the coin switch **16** may require two coins to place the appliance **60** into operation. With the first coin, the switch **16**, which is initially connected to the contactor **19**, will be actuated and come in contact with the contactor **18** thereby discharging the capacitor **17** through the magnetic coil **91** of the switching device **90**. This action will establish a magnetic field in the switch arms of the switch **93** causing them to make contact to thereby complete the motor energizing circuit and apply power to the motor **65**. When the switch **93** is closed the permanent magnet **95** will exert a sufficient magnetic field adjacent to the switch **93** to maintain its contact arms **93a** and **93b** in engagement without further current flow passing through the coil **91**. The motor **65** will continue to rotate the shaft **66** until the switch **93** is opened. While the incrementally movable cam **77** is rotating, the switch arm **72a** is disconnected from contact **80** removing the ground path from point **104**, thereby al-

lowing the capacitor **100** to charge through the resistor **83** and the magnetic coil **91**. As the incrementally movable cam **77** continues to rotate, the switch arm **72a** will be again placed in contact with the contactor **80** to complete a terminating circuit and discharge the capacitor **100** through the magnetic coil **91**. This current flow through the magnetic coil **91** is in such a direction as to create a magnetic field of polarity to overcome the magnetic field of the permanent magnet **95**, thereby releasing the switch arms **93a** and **93b** to interrupt the motor energizing circuit and stop the motor **65**. It can be seen that as the motor **65** advanced the indexing cam **77** through one increment all the sequencing cams advance the same amount, which by way of example, can be one-twelfth of a complete revolution. The coin switch **16**, which makes momentary contact with the contactor **18**, is again connected to the contactor **19** thereby allowing the capacitor **17** to recharge through the resistor **23** in readiness for a subsequent coin.

When the second coin actuates the switch **16** and places it in contact with the contactor **18**, the capacitor **17** will again discharge through the magnetic coil **91** to actuate the switch **93**. Again, the permanent magnet **95** will hold the switch **93** in the closed position until a deenergizing signal is received. As the motor rotates, the incrementally movable cam **77** actuates the switch arm **72a** to disconnect it from contact **80** removing the ground path from circuit point **104**, thus allowing the capacitor **100** to charge through the resistor **83** and the magnetic coil **91**. As the incrementally movable cam continues to advance, the switch arm **78** will again contact contactor **80**, discharging the capacitor **100** through the magnetic coil **91** in the opposite direction from the preceding discharge path of capacitor **17**. This action will again overcome the biasing force of the permanent magnet **95** thereby deactuating the switch **93** and stopping the motor **65**.

It has been noted that the sequencing cams **26, 42, 43, 44, 45, 46, 47, 73, 74, 75, 76**, and the indexing cam **77** have advanced exactly two increments of the twelve increments which comprise a complete revolution of the cam **77**. At this position of the sequencing cams, the cam **26** has advanced to actuate the switch **25** thereby deenergizing the electromagnetic device **20** to cause rejection of any further coins inserted in the coin mechanism associated with switch **16**. Also at this time, the cams in the timing circuit **30** have advanced to open the switch **41** and close the switch **40**, thereby forming a charging path for the capacitor **88** through the switch **25**, resistor **24**, resistor **35**, switch **40** and resistor **53**. The value of the capacitor **88**, resistor **35**, and resistor **24** will determine the time required to charge the capacitor **88** to a predetermined voltage (approximately 80 volts, for example).

For purposes of illustration, cams **73–75** have been shown for controlling respective electrical deviecs **61–63** of an appliance. By way of example, the electrical device **61** may be energized by the closure of switch **67** when the cam **73** has indexed or moved to its second predetermined position. If the electrical device **61** in the appliance **60** is to be energized for a 12 minute period, the resistor **35** may be chosen to have a value which allows the capacitor **88** to reach the predetermined voltage in three minutes and the cam **73** may be designed to maintain switch **67** closed during four successive actuations of motor **65**. The time required to energize the motor **65** and cause the rotation of the sequencing cams connected thereto during each increment of rotation is comparatively short. Therefore, the total time which the electrical device **61** is energized is controlled primarily by the number of times the motor is to be actuated and the time required to charge capacitor **88** between successive actuations.

In operation, each timing cycle is controlled by the R.C. time constant of capacitor **88**, resistor **24**, and one or more of the resistors **31–35**. As shown in the embodiment of FIGURE 1, as the resistance in series with capacitor **88** is increased the time required to charge capacitor **88**

will also increase. By way of example, if sequencing cams **42–47** are so arranged as to have switch **40** close and resistor **35** in series with capacitor **88**, the time required to charge capacitor **88** to the discharge voltage of neon lamp **89** may be three minutes. At the end of the three minutes interval capacitor **88** will discharge through the starting circuit, which includes neon lamp **89** and magnetic coil **92**, to actuate reed switch **93**, and complete the motor energizing circuit, which, in turn, will energize motor **65** thereby advancing the sequencing cams in a similar manner as described hereinabove during the insertion of coins. In this instance, let us assume that switch **40** has opened and switch **39** has closed because of rotation of the sequencing cams **46** and **45**. By this function resistor **35** is disconnected from the charging circuit capacitor **88**, and resistor **34**, which can have a larger value, is connected in the charging circuit of capacitor **88** to provide increased charging time for capacitor **88**.

During the rotation of the sequencing cams in the timing circuit **30**, the sequencing cams **73–76** are also rotated. By way of example, at the end of the sixth increment of rotation the switch **67** may be opened by the cam **73** and the switch **68** may be closed by the cam **74** thereby deenergizing the electrical device **61** and energizing the electrical device **62**. Also at this time, the switch **40** may be opened by the cam **46** and the switch **39** may be closed by the cam **45** placing the resistor **34** in the charging circuit of the capacitor **88** to change the timing cycle between each increment of rotation. The electrical device **62** will continue to be energized until the switch **68** is opened by the cam **74**, at which time the electrical device **63** may be energized with switch **69** being held closed by the cam **75**. At the end of the cycle of the appliance **60** all the switches **67–69** will be open and the cam **76** will close the switch **98** causing the motor **65** to rotate continuously until all the cams connected thereto are in the reset or preconditioned position, which will place the coin-receiving means in readiness for a subsequent operation.

FIGURE 3 illustrates the construction and relationship of the cams **26** and **27** mounted on the common shaft **66**. The cam **26** has a lobe portion **112** which, by way of example, may extend for ⅔ of its circumference. The cam **76** can be constructed from a pair of symmetrical cam parts **113** and **114**, which have lobe portions **115** and **116** respectively. Securing means **119** and **120** engage shaft **66** to fix the positions of cam parts **113** and **114**, respectively, relative to the shaft. An opening **122** between the lobes **115** and **116** can be adjusted to any desired angular extent between 0 and 180 degrees.

If the appliance **60** is to require two coins before the sequential operation starts, the cams **26** and **76** are in the preconditioned position as shown in FIGURE 3. When the first coin is inserted into the appliance coin mechanism, causing the switch **16** to be actuated, the cams **26** and **76** will rotate in the clockwise direction indicated for one increment. When the second coin is inserted into the machine the switch **16** will again be actuated to index the cams **26** and **76** a second time, thereby actuating the switch **25** which is adjacent to the cam **26**. Although the cam **26** was positioned in a manner to receive two coins it is possible by adjusting the cam **76** to place the cam **26** in an initial position to require one, two, three or four coins before an operating cycle begins. It will be understood that cams having more than twelve increments of movement can be used in an actual embodiment in accordance with the present invention, or that cam wheel **77** may be driven through gearing so as to make a complete revolution during movement of the other cams through a smaller arcuate distance. The switch **25** will remain actuated for the remainder of the controlling cycle, which is represented by the region from position number **10** to position number **12** on the cams **26** and **76**. At the end of the control cycle, position **10** of the cam **76** will actuate the switch **98** causing the motor **65** to rotate the cams **26** and **76** until the

switch **98** is opened by the cam **76** at position **12** thereby completing one revolution of the sequencing cams.

If one coin is required for the operation of the appliance **60**, the cam **76** will have the lobe **115** thereof adjusted to increase the opening **122** so as to extend between the positions **1** and **10** of the cam part **114**. This would cause the timing motor to continue to rotate until the position **1** of cam part **114** was at the top as viewed in FIGURE 3. Therefore, only one coin would be required to move the cam **26** from an orientation with position **1** at the top of an orientation with position **2** at the top. If three coins are required to initiate the operation of appliance **60** the lobe **115** of the cam **76** will be adjusted so as to decrease the extent of the opening **122**.

SUMMARY OF OPERATION OF FIGURE 1

When the appliance **60** is ready for operation, the timing motor **65** and sequencing cams connected thereto are in a preconditioned position. A given number of pulses from the coin counting switch **16** are required to set the appliance into a sequence of operation. After insertion of a predetermined number and denomination of coins, the coin counting switch **16** is disabled and will reject any over amount of coins which may be inserted. When each coin is inserted the incrementally movable timing motor **65** will advance one increment, and after the last coin is inserted the timing motor will be incrementally advanced to a position whereby the motor will be controlled by a timing circuit that can be adjusted for the desired operation.

As the cams progress through increments of movement during the sequence of operation, the timing circuit can be automatically varied during respective sequential operations by switching between different values of resistors in the timing circuit **30**. The motor **65** is energized and deenergized by a reed switch assembly **90** which is controlled by a pair of discharge capacitors **88** and **100**.

When the last sequence of operation is completed, the cam **76** will actuate the switch **98** to apply power to the motor **65** for a time sufficient to rotate the motor **65** and the sequencing cams thereon to a preconditioned position in readiness for a subsequent operation.

A modified form of the invention is shown in FIGURE 4. In this embodiment, an appliance is indicated at **201** having a plurality of electrical devices **202–204**, which are to be operated by a plurality of switches **207–209** having sequencing cams **212–214** adjacent thereto. A shaded pole motor **215** has one terminal thereof connected to a line **216** and the other terminal connected to a line **217** through a switch **218**. Shunting the switch **218** is a switch **221** which is operated by a cam **22**. The switch **218** is part of a relay device in the form of a reed switch assembly **225**, which has a pair of magnetizing coils **226** and **227** and a biasing permanent magnet **228** located therein. A transformer **30** has a primary winding **231** connected to the leads **216** and **217**, and a secondary winding **232** which has a center tap **233**. A pair of rectifiers **236** and **237** have their anodes connected to the outer leads of the secondary winding **232**, and their cathodes connected to a common tie point on a line **238**. Connected between the line **238** and the center tap **233** is the filter capacitor **239**. Also connected to the anode electrode of the rectifier **236** is a plurality of resistors **240–244** through a plurality of switches **245–250**. The switches are controlled by sequencing cams **251–256** respectively. Also connected to the resistors **240–244** is the center tap **233** of the transformer **230** through a line **260** and an adjustable resistor **261**. A start switch **257**, which is actuated by cam **258**, is placed in series with the center tap **233** and the switch of the timing circuit.

The resistors **240–244** and resistor **261** are connected across one-half of the secondary winding **232** of the transformer **230** and develop alternating signals to be applied to the base electrode of a transistor **265**. However, the alternating signal applied thereto is clamped to the potential of line **260** by a rectifier **266** connected between a resistor **267** and a capacitor **268**. The emitter electrode of the transistor **265** is connected to the emitter electrode of a transistor **270** and a resistor **271**, while the collector electrode of the transistor **265** is connected to the line **238** through a resistor **272**. The base of the transistor **270** is also connected to the collector electrode of the transistor **265** through a resistor **273** and a capacitor **274** and to the line **260** through a resistor **275**. Connected to the collector electrode of the transistor **270** is the line **238** through a resistor **278**, and also a diode **279** through a resistor **280**. Connected to the other terminal of the diode **279** is the emitter electrode of a unijunction transistor **281**. A capacitor **282** is arranged to receive a series of pulses from the output of transistor **270** at the frequency of the output from transformer **230** to progressively charge the capacitor **282**. The upper base of the unijunction transistor **281** has connected thereto the line **238** through a resistor **285**, while the lower base of the unijunction transistor **281** is connected to the line **260** through the magnetizing coil **227**. A resistor **286** has one end thereof connected to the line **238** and the other end thereof connected to a line **287**.

A coin receiving device, which is used to initiate the operation of the appliance **201**, has a switch **290** connected to the line **260** through a capacitor **291** and an electro-magnetic device **292** which is operative to reject coins when deeneriged. The switch **290** has a pair of stationary contacts **295** and **296**. An incrementally movable cam wheel **301** is used to actuate the movable arm **300a** of switch **300** between contacts **298** and **299** while a sequencing cam **302** is used to actuate a switch **303** connected to the electromagnetic device **292**. A capacitor **305** is connected between the resistor **286** and the magnetizing coil **226**.

The DC voltage between the lines **238** and **260** is used to charge the capacitors **282**, **291** and **305**, to energize the electromagnetic device **292** and to apply operating voltages to the transistors **265**, **270** and **281**. An AC signal from the lower terminal of the secondary winding **232** is applied to one terminal of the capacitor **268** through one or more of the load resistors **240–244**, while the diode **266** is connected between the center tap **233** of the transformer and the other terminal of the capacitor **268** to prevent the potential at the other terminal from going appreciably below the potential of line **260**. The potential at the lefthand terminal of capacitor **268** will vary from zero (relative to line **260**) to twice the amplitude of the AC signal applied to the righthand terminal of capacitor **268**. The signal supplied to transistor **265** can be described as a sine wave with its negative peaks clamped to the potential of line **260**. The transistor **265** is biased in the non-conductive state by a small positive DC voltage developed across the resistor **271**, transistor **270** being in the conductive state. The transistor **265** will remain non-conductive until the incoming signal applied to the base thereof exceeds the small positive DC voltage applied to the emitter. Also during this time, the transistor **270** is rendered conductive by the forward bias applied thereto from the voltage divider resistor **272**, **273** and **275**. When the incoming voltage is greater than the DC voltage across the resistor **271**, the transistor **265** will be rendered conductive regeneratively causing transistor **270** to become non-conductive. During the time interval when the transistor **270** is non-conductive the capacitor **282** will charge through resistors **278** and **280** and the rectifier **279**. When the transistor **265** is switched to the non-conductive state by the incoming signal, transistor **270** becomes conductive again and the capacitor **282** will stop charging. Therefore, each time the transistor **265** is rendered conductive by the incoming singal, the capacitor **282** will receive an increment of charge. When the charge across the capacitor **282** has reached ap-

proximately 15 volts, the unijunction transistor **281** will be rendered conductive to discharge the capacitor **282** through the coil **227** of the switching device **225**. This action will close the switch **218** and cause incremental rotation of the motor **215**.

The incrementally movable cam wheel **301** will momentarily actuate the switch **300** thereby completely discharging the capacitor **282** in readiness for a subsequent timing cycle and allowing the capacitor **305** to become charged through the resistor **286** and the coil **226**. When the switch **300** is deactuated the capacitor **305** is discharged through the coil **226** to produce a magnetic field of polarity to neutralize the bias magnetic field from magnet **228** to deactuate the switch **218** and stop the motor **215**.

The time required to charge the capacitor **282** sufficiently to render the unijunction transistor **281** conductive is determined by the amplitude of the alternating signal applied to the capacitor **268**, which in turn is varied by the resistors **240–244**. If the amplitude of the controlling signal is small and only renders the transistor **265** conductive for very short periods of time, the transistor **270** will be rendered non-conductive for equally short periods of time so that the capacitor **282** will receive relatively small increments of charge and will require a longer period of time to become charged to the firing voltage of transistor **281**. The transistor **265** is rendered conductive for longer periods of time when the control signal applied thereto is of larger amplitude. This action will cause the transistor **270** to be rendered non-conductive for longer periods of time, thereby applying larger increments of charge to the capacitor **282** and decreasing the time intervals between actuators of motor **215**.

It can be seen therefore that by switching in resistors **240–244** sequentially, the timing of the successive appliance cycles is readily controlled. It should also be noted that the cams **222** and **302** in conjunction with the switches **221** and **303** form a similar circuit to that shown in FIGURE 1 wherein the cams **26** and **76** are used in conjunction with the switches **25** and **98**.

SUMMARY OF OPERATION OF FIGURE 4

When the appliance **201** is ready for operation, the timing motor **215** and the sequencing cams connected thereto are in a preconditioned position. A given number of pulses from the coin counting switch **290** are required to set the appliance into a sequence of operation. After insertion of a predetermined number and denomination of coins the coin counting switch **290** is disabled and will reject any over amount of coins which may be inserted. When each coin is inserted, the incrementally movable timing motor **215** will advance one increment, and after the last coin has been inserted, the timing motor will be incrementally advanced to a position in which the motor will be controlled by a timing circuit that can be adjusted for the desired operation.

The operation of the incrementally movable timing motor **215**, the sequencing cams connected thereto, and the reed switch assembly **225** are similar to that of the timing motor **65** in conjunction with the sequencing cams thereon, and the reed switch assembly **90** described in the summary of operation of FIGURE 1.

However, after the last coin is inserted, the timing motor will then be controlled by a transistor timing circuit thereby energizing a suitable motor which will incrementally move the sequencing cams through a complete cycle of operation.

A plurality of timing resistors **240–244** are selectively connected to the input of the timing circuit by a series of sequencing cams **251–256**. When a low amplitude signal is applied to the input capacitor **268** a small charging pulse is applied to the capacitor **282** thereby requiring a long period of time to render the unijunction transistor **281** conductive so as to actuate the reed switch assembly **225** and energize the timing motor **215**. When a high amplitude signal is applied to the capacitor **268** a larger charging pulse is applied to the capacitor **282** thereby requiring a shorter period of time to render the unijunction transistor **281** conductive so as to actuate the reed switch assembly **225** and energize the timing motor **215**.

As seen in FIGURE 5, the timing circuit **30** is modified to include a plurality of switches **500**, **501** and **502** which are operated in response to condition sensing devices connected thereto. For purposes of simplicity, the condition sensing devices per se are not shown, and therefore the phrase "condition sensing device" and the phrase "condition sensing switch" will refer to the switches **500**, **501** and **502**.

For example, the normally open condition sensing switch **500** may be responsive to temperature which is sensed from the heated exhaust air of the appliance during the drying cycle. When used in this manner, the switch **500** will remain open during the drying cycle until the clothes being treated are dried to a predetermined level. Thereafter, the switch **500** will close completing the timing circuit through resistor **33** and charging capacitor **88** to continue the drying cycle for a preselected interval to insure complete drying of the clothes. The condition sensing switch **501** is connected in circuit with the timing circuit **30'** and replaces the resistor **32**. Therefore, closing the normally open switch **501** will rapidly charge the timing capacitor **88** which, in turn, will energize the drive motor **65** to advance the sequencing elements or cams connected thereto. The sequencing switch **501** may be responsive to the water level of the appliance being controlled. Furthermore, the sequencing switch **502** may be responsive to temperature of the clothes being treated. The sequencing switch **502** is connected in shunt relation with the resistor **531** thereby initially providing a time responsive sequence which is terminated when a preselected condition is sensed. For example, the condition sensing switch **502** may be used in the cool down cycle of the appliance where a preselected time interval for the cycle is established by the resistor **531** and wherein the cool down cycle is terminated prior to the expiration of the time interval should the fabric temperature reach a predetermined level prior to the completion of the cool down cycle.

It will be understood that various types of condition sensing devices may be associated with the timing circuit **30'**. For example, devices responsive to temperature, pressure, light or vibration may be connected to the timing circuit **30'** as desired to obtain the required results.

To further increase the flexibility of the timing circuit **30'**, one or more of the resistors associated therewith may be variable. For example, the resistor **34** is replaced with a variable resistor **534** which may be used to vary the time duration of the wash cycle.

FIGURE 6 shows a modified circuit arrangement of the sequencing control circuit of FIGURE 1 which includes the modified timing circuit **30'** of FIGURE 5. The drive mechanism start circuit is substantially the same as that shown in FIGURE 1 in that the neon lamp **89** is fired in response to a predetermined voltage charge across the charging capacitor **88**. The starting pulse created by the ionization of the neon lamp **89** is used to trigger an electronic switching device, as will be described in full detail hereinbelow.

The diode **57** of FIGURE 1 is removed and replaced with a diode **600** connected in series with the line **12**. A diode **601** has its anode connected to the line **12'** and its cathode connected to a line **602** which, in turn, is connected to one end of the drive mechanism **65'**. A Zener diode **603** is connected in shunt relation with the timing circuit **30'** and the charging capacitor **88** to maintain the voltage drop thereacross substantially constant. There-

fore, variations in line potential will not affect the timing circuit **30'** and the timing function thereof.

A charging diode **604** has its anode connected to the line **58** and its cathode connected to one end of capacitor **54** to provide a low resistance charge path for the capacitor **54**. A resistor **606** is connected in shunt relation to the diode **604** to provide a high resistance discharge path for the capacitor **54**, as will be explained hereinbelow.

A current limiting resistor **607** has one end thereof connected to the resistor **606** and the cathode of the diode **604** and the other end thereof connected to the timing circuit **30'**.

To insure that the charging capacitor **88** is fully discharged at the end of each timing cycle so that the next preceding timing cycle will start at a zero reference, a discharge diode **608** is connected between the capacitor **88** and the circuit point between the resistors **606** and **607**.

The magnetically operated switch **93** of the magnetic actuating device **90**, of FIGURE 1, is replaced with a silicon controlled rectifier **609** which now forms the energizing circuit for the drive mechanism **65'**. The provision of the silicon controlled rectifier **609** greatly simplifies the circuit arrangement of the sequencing control circuit and also increases the reliability thereof. A capacitor **610** is connected in shunt relation with the silicon controlled rectifier **609** and together with the diode **601** provide a transient suppression circuit to ensure proper performance of the silicon controlled rectifier **609**.

To terminate the operation of the drive mechanism **65'** a terminating circuit including a terminating switch **611** is also connected in shunt relation with the silicon controlled rectifier **609**, and the switch **611** is operated by a cam **612** which, in turn, is connected to the drive mechanism **65'** for rotation thereby.

The gate electrode of silicon controlled rectifier **609** is connected to the charging capacitor **88** through the neon lamp **89**. Therefore, ionization of the neon lamp **89** will deliver a triggering pulse to the gate electrode of silicon controlled rectifier **609** to render the silicon controlled rectifier conductive. This action will energize the drive mechanism **65'** and cause the cam **612** to rotate sufficient to close the terminating switch **611**. Upon closing of the switch **611**, all of the energizing current for the drive mechanism **65'** will pass through the switch **611** thereby decreasing the current flow through the silicon controlled rectifier **609** below its characteristic holding current to render the silicon controlled rectifier non-conductive. The drive mechanism **65'** will continue to rotate until the terminating switch **611** is opened by the cam **612** to remove the energizing current from the mechanism **65'**.

For purposes of simplicity, the coin counting mechanism of FIGURE 1 is not shown in the modified circuit arrangement of FIGURE 6. However, it will be understood that such a coin counting mechanism can be incorporated in the arrangement of FIGURE 6 if desired.

SUMMARY OF OPERATION OF FIGURE 6

When AC current is applied between lines **58** and **12**, only the positive half-cycles are impressed across the lines **58** and **12'** due to the action of the blocking diode **600**. The positive pulses are applied to capacitor **54** through the charging diode **604**. The charging diode **604** provides a low resistance charge path for the capacitor **54**.

The timing circuit **30'** is connected across the DC potential of the capacitor **54** through the current limiting resistor **607**. The resistance of resistor **607** is relatively high as compared to the low resistance path through the blocking diode **604** to further provide a high resistance discharge path for the capacitor **54**. However, it will be understood that the resistance of the resistor **607** is relatively low as compared to the sequence timing resistor **35**, **534**, **33** and **351** of the timing circuit **30'**. Therefore, when either switch **41** or switches **37** and **501** are closed, the timing capacitor **88** will charge rapidly through resistor **607**, timing circuit **30'**, and the motor **65**. After capacitor **88** has charged, it will ionize neon lamp **89** which will energize the silicon controlled rectifier **609** through its gate electrode.

The starting circuit, which comprises neon lamp **89**, will render the silicon controlled rectifier **609** conductive when the charge across the timing capacitor **88** has reached the ionization potential of the neon lamp. Therefore, during the positive half-cycles, as sensed by line **58**, energizing current will be delivered to the drive mechanism **65'**. However, during the negative half-cycles on line **58** energizing current is not delivered to the drive mechanism **65'**. The design of the drive mechanism **65'** is such that is will operate when energized by the intermittent half-wave current supplied only during the positive half-cycle on line **58**. To ensure that the silicon controlled rectifier will remain conductive during the negative half-cycles of line **58**, and to ensure that the silicon controlled rectifier **609** will be rendered conductive during such time, when a trigger pulse is applied to the gate electrode thereof, a holding current path is provided. This holding current path is from the positive side of the capacitor **54** through resistor **606** and then through the silicon controlled rectifier to the negative side of the capacitor **54**.

During the time interval when silicon controlled rectifier **609** is conductive, a discharge path for timing capacitor **88** is provided through the discharge diode **608**, resistor **606** and silicon controlled rectifier **609** thereby completely discharging the timing capacitor **88**. Therefore, when the operation of the drive mechanism **65'** is terminated, the charging capacitor **88** is ready ot receive charging current through the charging circuit **30'** and to time the next sequence of operation. This circuit arrangement compensates for the relatively high deionization potential of neon lamp **89**. That is, the neon lamp **89** will become nonconductive before the timing capacitor **88** is completely discharged, and therefore, it is necessary to remove the remaining charge on capacitor **88**.

As mentioned hereinabove, when the silicon controlled rectifier **609** is rendered conductive, the drive mechanism **65'** is energized. This action will advance the sequencing elements for cams connected to the drive mechanism to shift the operation from one of the controlled circuit elements **61–63** to another one of the controlled circuit elements **61–63**. Also, during the energization of the drive mechanism **65'** the cam **612**, which is analogous to the cam **77** of FIGURE 1, is rotated to close the switch **611**. Therefore, all of the energizing current delivered to the drive mechanism **65'** passes through the switch **611** and the current passing through the silicon controlled rectifier **609** will drop below the required holding current thereof thereby rendering the silicon controlled rectifier nonconductive. The drive mechanism **65'** will continue to rotate until the switch **611** is opened by the action of the cam **612** which will terminate the operation of the drive mechanism **65'**.

The capacitor **610**, which is connected in parallel with the silicon controlled rectifier **609**, and the diode **901** are combined to form a transient suppression circuit thereby improving the reliability of the control system.

The circuit arrangement as shown in FIGURE 6 provides a new and improved timing and sequencing control circuit which utilizes a simple and inexpensive drive mechanism. It will be understood that the arcuate travel between each step or advance of the drive mechanism may be kept small by providing many lobes on the cam **612**. This feature will enable the sequencing and control circuit of the present invention to provide many machine functions in a single 360° rotation of the drive mechanism. Although the switch **611** is shown as cam operated, it will be understood that a switch contact may engage a movable wiper arm or commutator connected directly to the drive mechanism, if desired.

Therefore, the present invention provides a new and improved timing and sequencing control system which

simplifies the construction and operation of an appliance. Although the present invention has been described in connection with the appliances such as washers and driers, it is not to be construed as limited solely thereto, Variations and modifications may be effected without departing from the spirit and scope of the novel concepts of this invention.

The embodiments of the invention in which an exclusive property or privilege is claimed are defined as follows:

1. In an appliance control circuit having an incrementally movable timer device for controlling the duration of a cycle of operation of an appliance and having switch means for actuation a predetermined number of times as a precondition to operation of the appliance,
- precondition means requiring actuation as a preconditon to setting of said appliance in operation,
- timer control means controlling actuation of said timer device and responsive to actuation of said switch means to step said timer device through an increment of movement,
- timer actuation responsive means coupled to said precondition means and to said timer device and responsive to a predetermined number of increments of movement of said timer device to actuate said precondition means, and
- means under the control of said precondition means for thereafter enabling the automatic cycling of said timer device to control the duration of a cycle of operation of the appliance.

2. In an appliance control circuit as defined in claim 1, means driven by said timer device and controlling the end of cycle position of said timer device and being adjustable to vary the end of cycle position of said timer device to correspondingly vary the number of actuations of said switch means required to actuate said precondition means.

3. In an appliance control circuit as defined in claim 1, said timer control means comprising:
- a reed switch assembly having timer control contact means controlling energization of said timer device,
- means responsive to closure of said switch to actuate said reed switch assembly and close said timer control contact means thereof,
- said reed switch assembly having a bias means for producing a magnetic field of strength to hold said timer control contact means in closed condition,
- said reed switch assembly having a winding for energization to produce a release magnetic field overcoming the holding effect of said bias means to release said contact means, and
- said timer control means further comprising:
  - means coupled with said timer device and responsive to each incremental movement thereof to supply a release current pulse to said winding of said reed switch assembly of polarity to release said timer control contact means thereof.

4. In an appliance control circuit as defined in claim 3 and further characterized by said switch closure responsive means supplying actuating current pulses to said winding of said reed switch assembly of polarity to close said timer control contact means thereof.

5. In an appliance control circuit,
- a timer device for actuation step-by-step to drive a plurality of sequencing elements of an appliance,
- relay means controlling energization of said timer device and having first and second energizing circuits,
- a first switch controlling said first energizing circuit of said relay means,
- a second switch controlling said second energizing circuit of said relay means,
- means for actuating said first switch a predetermined number of times in response to fulfillment of a predetermined condition to actuate said relay means and thus actuate said timer device a corresponding number of times, and
- means controlling said second switch and responsive to actuation of said timer device said predetermined number of times to actuate said second switch.

6. In an appliance control circuit,
- a timer device for actuation step-by-step to drive a plurality of sequencing elements of an appliance,
- relay means controlling energization of said timer device and having first and second energizing circuits,
- a first switch controlling said first energizing circuit of said relay means,
- a second switch,
- receiving means for actuating said first switch in response to fulfillment of a predetermined condition to actuate said relay means and thus said timer device,
- means controlling said second switch and responsive to actuation of said timer device to actuate said second switch,
- a timing circuit controlled by said second switch and controlling the supply of energy to said second energizing circuit of said relay means to actuate said relay means by means of said second energizing circuit a predetermined time after actuation of said second switch, and
- means responsive to a predetermined number of actuations of said timer device to change the time delay provided by said timing circuit,

7. In an appliance control circuit,
- a series of sequencing elements for movement to control the operation of an appliance,
- a rotatable timer drive device for driving said sequencing elements and having an energizing circuit,
- timer operating means controlling said energizing circuit of said timer drive device and operable to incrementally actuate said timer drive device, and
- a timing circuit providing a variable timing interval between the incremental actuations of said rotatable timer drive device for controlling operation of said sequencing elements.

8. In an appliance control circuit,
- a series of sequencing elements for movement to sequence the operation of an appliance,
- a rotatable timer drive device for driving said sequencing elements and having an energizing circuit,
- a relay controlling said energizing circuit of said timer drive device and having a relay actuating circuit operable to incrementally actuate said rotatable timer drive device,
- a timing circuit providing a variable timing interval between the incremental actuations of said rotatable timer drive device for controlling the operation of said sequencing elements,
- said timing circuit having a plurality of time interval control elements, and
- means responsive to rotational movement of said rotatable timer drive device to connect different ones of said time interval control elements in said timing circuit at respective times in the operation of said rotatable timer drive device.

9. In an appliance control circuit,
- a series of sequencing elements for movement to control the operation of an appliance,
- a rotatable timer drive device for driving said sequencing elements and having an energizing circuit,
- timer operating means controlling said energizing circuit of said rotatable timer drive device and operable to incrementally actuate said rotatable timer drive device,
- a timing circuit providing a variable timing interval between the incremental actuations of said rotatable timer drive device for controlling the operation of said sequencing elements,
- said timing circuit having a plurality of time interval control elements, and
- means responsive to movement of said rotatable timer drive device to connect different ones of said time

interval control elements in said timing circuit at respective times in the operation of said rotatable timer drive device.

10. In an appliance control circuit,
a series of sequencing elements for movement to control successive steps in the operation of an appliance,
a motor for driving said sequencing elements and having an energizing circuit,
timer operating means controlling said energizing circuit of said motor and operable to incrementally actuate said motor,
a timing circuit providing a variable timing interval and controlling said timer operating means to vary the speed of operation of said sequencing elements,
said timing circuit being controlled by a plurality of variable width pulses and providing timing intervals in accordance with the width of said pulses, and
means responsive to said motor to vary the width of said variable width pulses in successive portions of the operating cycle of said motor.

11. In an appliance control circuit,
a series of sequencing elements for movement to vary the operation of appliance,
a motor for driving said sequencing elements and having an energizing circuit,
a relay controlling said energizing circuit of said motor and having a relay actuating circuit,
a timing circuit providing a variable timing interval and controlling said relay actuating circuit to vary the speed of operation of said sequencing elements, said timing circuit being controlled by a series of variable width pulses, and
means for adjusting the width of said variable width pulses to correspondingly adjust the speed of operation of said sequencing elements.

12. In an appliance control circuit having an incrementally movable timer device for controlling the duration of a cycle of operation of an appliance and having a switch for actuation a plurality of times as a precondition to operation of the appliance,
precondition means requiring actuation as a precondition to setting of said appliance in operation,
control means controlling actuation of said timer device and responsive to each actuation of said switch to step said timer device through an increment of movement,
timer actuation responsive means coupled to said precondition means and to said timer device and responsive to a predetermined number of increments of movement of said timer device to actuate said precondition means,
means under the control of said precondition means for thereafter enabling the automatic cycling of said timer device to control the duration of a cycle of operation of the appliance, and
means responsive to actuation of said precondition means to disable said switch.

13. In an appliance,
a step-by-step timer device having an actuating circuit,
a coin-counting circuit having a coin switch for actuation a predetermined number of times by coins,
a relay controlling said actuating circuit of said timer device and having a start circuit energized each time said coin switch is actuated,
means for holding said relay actuated after actuation thereof,
means for releasing said relay,
means responsive to an increment of movement of said timer device to momentarily energize said relay release means to release seaid relay,
means for enabling operation of said appliance in response to a predetermined number of incremental movements of said timer device, and
means in said appliance controlled by said timer device during normal operation of said appliance.

14. In an appliance,

a step-by-step timer device having an actuating circuit,
a coin-counting circuit having a coin switch for actuation a predetermined number of times by coins,
reed type relay means having reed operated contacts controlling said actuating circuit of said timer device and having a start winding for energization each time said coin switch is actuated and having a permanent magnet for holding said reed contacts closed upon engagement thereof by energization of said start winding,
means for releasing said relay means,
means responsive to an incremental movement of said timer device to momentarily energize said releasing means to release said relay means,
means for controlling the normal operation of said appliance in response to a predetermined number of incremental movements of said timer device, and
means in said appliance controlled by said timer device during normal operation of said appliance.

15. In an appliance,
a step-by-step timer device comprising:
a motor having an alternating current actuating circuit,
a series of sequencing elements driven by said motor, relay means controlling said alternating current actuating circuit of said motor and having a start circuit for periodic energization during operation of the appliance in response to the position of said sequencing elements to incrementally actuate said motor, and
means responsive to movement of said motor at the end of a cycle of operation to automatically interrupt said start circuit.

16. An appliance,
control system comprising:
a step-by-step timer device having an actuating circuit,
relay means controlling said actuating circuit of said timer device and having actuating means controlling actuation of said relay means,
means for holding said relay means actuated after actuation thereof for a limited time interval,
time delay means providing a time delay and operable after said time delay to energize said actuating means after each movement of said timer device, and
means responsive to said timing device for automatically changing the time delay provided by said time delay means in respective parts of the appliance cycle.

17. In an appliance,
a step-by-step timer device having an actuating circuit,
initiating means actuatable to initiate operation of said appliance,
relay means controlling said actuating circuit of said timer device and having a start circuit engaged each time said initiating means is actuated,
means for holding said relay means actuated after actuation thereof,
means for releasing said relay means,
means responsive to an increment of movement of said timer device to momentarily energize said releasing means to release said relay means,
means for enabling normal operation of said appliance and actuated in response to a predetermined number of increments of movement of said timer device,
means in said appliance controlled by said timer device during normal operation of said appliance, and
a variable timing circuit controlling the speed of operation of said timer device and selectively adjustable to vary the duration of the operating cycle of the appliance.

18. In an appliance,
a step-by-step timer device having an actuating circuit,

relay means controlling said actuating circuit of said timer device and having a start circuit for actuation to operate said timer device,

means for holding said relay means actuated after actuation thereof,

means for releasing said relay means,

means responsive to an increment of movement of said timer device to momentarily energize said releasing means to release said relay means,

a variable timing circuit controlling actuation of said start circuit and adjustable for selectively ch nging the speed of operation of said timer device, and

sequencing elements driven by said timer device and having rates of advance which are collectively varied by adjustment of said variable timing circuit.

19. In an appliance,

a step-by-step timer device having an actuating circuit,

a coin counting circuit having a coin switch for actuation a predetermined number of times,

relay means controlling said actuating circuit of said timer device and having a start circuit which is energized each time said coin switch is actuated,

means for holding said relay means actuated after actuation thereof,

means for releasing said relay means,

means responsive to an increment of movement of said timer device to momentarily energize said releasing means to release said relay means,

a coin rejection means, and

means responsive to a predetermined number of incremental movements of said timer device to actuate said coin rejection means.

20. In an appliance control circuit,

a timer device for actuation step-by-step to drive a plurality of sequencing elements of an appliance,

relay means controlling energization of said timer device and having first and second energizing circuits,

a first switch controlling said first energizing circuit of said relay means,

a second switch controlling said second energizing circuit of said relay means,

receiving means for actuating said first switch a predetermined number of times in response to fulfillment of a predetermined condition to actuate said relay means and thus actuate said timer device a corresponding number of times,

means controlling said second switch and responsive to actuation of said timer device said predetermined number of times to actuate said second switch, and

means responsive to the movement of said timer device to a position near the end of its cycle to energize said timer device independently of said relay means until said timer device moves to a predetermined initial position from which said predetermined number of actuations of said timer device is required before actuation of said second switch to reset said timer device at the end of the appliance cycle.

21. In an appliance control circuit having an incrementally movable timer device for controlling a cycle of operation of an appliance and having a switch for actuation a plurality of times as a precondition to operation of the appliance,

precondition means requiring actuation as precondition to setting of said appliance in operation,

timer control means controlling actuation of said timer device and responsive to each actuation of said switch to step said timer device through an increment of movement,

timer actuation responsive means coupled to said precondition means and to said timer device and responsive to a predetermined number of increments of movements of said timer device to actuate said precondition means,

means under the control of said precondition means

for thereafter enabling the automatic cycling of said timer device to control a cycle of operation of the appliance, and

means responsive to the timer device reaching a point near the end of its cycle to continuously energize said timer device for continuous movement thereof to a reset position.

22. In an appliance,

a timer motor means having an output means and operable for counting coins and for driving timing elements for said appliance,

means for stepping said output means of said timer motor from a reset position to a cycle start position in response to receipt of a predetermined number of coins and for thereafter stepping said timer motor until an end of cycle position of said motor output means is reached, and

means for continuously energizing said motor and responsive to movement of said motor output means to said end of cycle position to initiate continuous energization of said motor in response to the motor outupt means reaching said reset position to interrupt energization of said motor.

23. In a machine control circuit,

a plurality of sequencing elements for movement to control the operation of a machine,

drive means periodically advanced in increments for driving said sequencing elements,

an energizing circuit for supplying electrical energy to said drive means for actuation thereof and including energizing circuit control means for controlling the energization of said energizing circuit,

a starting circuit for controlling the energizing circuit control means,

a timing circuit periodically completing said starting circuit for closing said energizing circuit through said energizing circuit control means and energizing said drive means, and

a terminating circuit including means operated by the actuation of said drive means for opening said energizing circuit through said energizing circuit control means to deactuate said drive means.

24. The machine control circuit claim **23**

wherein said energizing circuit control means includes a selectively conductive silicon controlled rectifier, and

wherein said starting circuit includes a gate circuit connected to said silicon controlled rectifier for controlling the conductive state thereof.

25. The machine control circuit of claim **24**

wherein said terminating circuit in a shunt circuit in parallel with said silicon controlled rectifier, and

wherein said means operated by the actuation of said drive means is a cam operated switch for closing said shunt circuit in response to rotation of said drive means to continue the supply of electrical energy to said drive means while deenergizing said energizing circuit, said cam operated switch opening said shunt circuit upon further rotation of said drive means to deactuate said drive means.

26. The machine control circuit of claim **23**

wherein said energizing circuit control means includes a magnetically operated switch means, and

wherein said starting circuit includes a magnetic coil operable to close said magnetically operated switch means for completing said energizing circuit.

27. The machine control circuit of claim **26**

wherein said terminating circuit includes a second magnetic coil operable to open said magnetically operated switch means for deactuating said drive means, and

wherein said means operated by the actuation of said drive means is a cam operated switch for energizing said terminating circuit in response to rotation of said drive means.

28. The machine control circuit of claim 23 wherein said timing circuit includes variable time delay means for establishing the duration of the intervals between periodic completions of said starting circuit.

29. The machine control circuit of claim 28 wherein said variable time delay means includes capacitance means, and variable resistance means for varying the charging rate of said capacitance means.

30. The machine control circuit of claim 23 wherein said timing circuit includes capacitance means, and resistance means for controlling the charging rate of said capacitance means.

31. The machine control circuit of claim 30 wherein said timing circuit further includes condition responsive means connected in series with said resistance means and responsive to an operational condition of the machine, said condition responsive means rendering said timing circuit ineffective to control said starting circuit until said operational condition of the machine has been satisfied.

32. The machine control circuit of claim 30 wherein said timing circuit further includes condition responsive means connected in parallel with said resistance means and responsive to an operational condition of the machine, said condition responsive means rendering said resistance means ineffective to control the charging rate of said capacitance means when the operational condition of the machine has been satisfied.

33. A programming device for sequentially actuating a plurality of controlled circuit elements throughout an operational cycle and providing a series of intervals of varying duration between the sequential actuations of said controlled circuit elements comprising:

a control circuit electrically connected to said controlled circuit elements for the energization thereof,

switch means in said control circuit controlling the energization of said controlled circuit elements,

programming means regulating the actuation of said switch means,

drive means driving said programming means through a series of operational positions for sequential actuation of said switch means,

an energizing circuit for supplying electrical energy to said drive means and including energizing circuit control means for controlling the energization of said energizing circuit,

a starting circuit for controlling the energizing circuit control means,

a timing circuit automatically sending periodic pulses to said starting circuit for closing said energizing circuit through said energizing circuit control means and energizing said drive means,

said timing circuit including variable time delay means for establishing the duration of the intervals between said periodic pulses, and

a terminating circuit including means operated by the energization of said drive means for opening said energizing circuit through said energizing circuit control means to deenergize said drive means.

34. A control system for sequentially operating a plurality of devices of a machine, comprising:

a power source,

a drive motor,

a first group of switches for controlling the energizing of said devices,

a second group of switches,

first and second groups of sequencing elements connected to said motor for rotation therewith,

each of said first group of sequencing elements positioned adjacent a corresponding one of said first group of switches for actuation thereof, and each of said second group of sequencing elements positioned adjacent a corresponding one of said second group of switches for actuation thereof, a motor energizing circuit for selectively connecting said drive motor to said power source,

a control circuit including said second group of switches and said second group of sequencing elements for generating sequencing signals,

a starter circuit connected between said motor energizing circuit and said control circuit for actuating said motor energizing circuit in response to said sequencing signals to energize said drive motor, and

a terminating circuit connected between said power source and said drive motor and operable by said drive motor for deenergizing thereof in response to rotation of said drive motor through a preselected quantum of rotation.

35. The control system of claim 34 wherein said motor energizing circuit includes an electronic switching device having anode and cathode electrodes and a controlled electrode, and

said controlled electrode being connected to said starting circuit to render said electronic switching device conductive in response to said sequencing signal.

36. The control system of claim 35 wherein said terminating circuit includes a switch connected in shunt relation with said electronic switching device, and

a cam connected to said drive motor for rotation therewith,

said cam positioned in proximity with said switch for actuation thereof,

whereby, energization of said drive motor will advance said cam to close said switch to provide a current path for substantially all of the motor energizing current thereby rendering said electronic switching device non-conductive during the remainder of the motor energizing cycle, and to deenergize said drive motor when said switch is opened by said cam.

37. The control system of claim 34 wherein said control circuit further includes:

a timing capacitor having one end thereof connected to a circuit point with said starting circuit,

a source of direct current potential connected to said second group of switches, and

means connected between said circuit point and said second group of switches for controlling the rate of charge of said timing capacitor from said direct current potential in response to the actuation of at least one of said second group of switches by said second group of sequencing elements.

38. The control system of claim 37 further including a discharge diode having its anode connected to said circuit point, and

circuit means connecting the cathode of said discharge diode to said starting circuit,

whereby actuation of said starting circuit will cause a portion of the current charge on said timing capacitor to flow through said discharge diode and said starting circuit to ensure complete discharge of said timing capacitor during each cycle of operation.

39. The control system of claim 34 wherein said control circuit further includes at least one condition sensing switch connected in circuit with said second group of switches to cause a sequencing signal to be generated irrespective of time thereby energizing said drive motor in response to a preselected sensed condition.

40. The control system of claim 34 wherein said control circuit further includes resistance means connected between said starting circuit and each of said second group of switches, and a plurality of condition sensing switches connected in circuit with cer-

tain ones of said second group of switches to actuate said starting circuit in response to a preselected sensed condition irrespective of time.

41. In a time sequence switch, a step-advance means comprising, an electronic switching means, a variable periodicity timing circuit, said timing circuit activating said electronic switching means at predetermined time intervals, said electronic switching means energizing a motor, said motor advancing said time sequence switch, cam-switching means de-energizing said motor after said time sequence switch has advanced a predetermined amount, and said cam-switching means resetting said timing circuit.

42. In a time sequence switch, a step-advance means comprising, an electronic switching means, a variable periodicity timing circuit, means for varying the periodicity of said timing circuit during portions of a programmed timing cycle, said timing circuit activating said electronic switching means at predetermined time intervals, said electronic switching means energizing a motor, said motor advancing said time sequence switch, cam-switching means de-energizing said motor after said time sequence switch has advanced a predetermined amount, and said cam-switching means resetting said timing circuit.

43. In a time sequence switch, a step-advance means comprising, an electronic switching means, a variable periodicity timing circuit, means for automatically varying the periodicity of said timing circuit during portions of a programmed timing cycle, said timing circuit activating said electronic switching means at predetermined time intervals, said electronic switching means energizing a motor, said motor advancing said time sequence switch, cam-switching means de-energizing said motor after said time sequence switch has advanced a predetermined amount, and said cam-switching means resetting said timing circuit.

References Cited

The following references, cited by the Examiner, are of record in the patented file of this patent or the original patent.

UNITED STATES PATENTS

3,161,481	12/1964	Edwards	34—53 X
3,191,738	6/1965	New	194—9
3,237,466	3/1966	Purtilo	194—9
3,350,606	10/1967	Hirsch	317—22
3,381,177	4/1968	Allen	317—22

STANLEY H. TOLLBERG, Primary Examiner

U.S. Cl. X.R.

317—22

UNITED STATES PATENT OFFICE

CERTIFICATE OF CORRECTION

Patent No. Re. 26,957 Dated September 29, 1970

Inventor(s) J. L. McConnell

It is certified that error appears in the above-identified patent and that said Letters Patent are hereby corrected as shown below:

Claim 13, column 15, line 70, "said" is misspelled as "seaid".

Claim 25, column 18, line 51, "in" should be --is--.

SIGNED AND
SEALED
DEC 29 1970

(SEAL)
Attest:

Edward M. Fletcher, Jr.
Attesting Officer

WILLIAM E. SCHUYLER, JR.
Commissioner of Patents

ORM PO-1050 (10-69)

USCOMM-DC 60376-P69
U.S. GOVERNMENT PRINTING OFFICE : 1969 O—366-334

Disclaimer

Reissue No. 26,957.—*James L. McConnell*, St. Joseph, Mich. ELECTRONIC TIMER ESCAPEMENT AND COIN COUNTER. Patent dated Sept. 27, 1970. Disclaimer filed Sept. 4, 1973, by the assignee, *Whirlpool Corporation.*

Hereby enters this disclaimer to claims 18 and 24 of said patent.

[*Official Gazette October 23, 1973.*]

Disclaimer

Reissue No. 26,957.—*James L. McConnell*, St. Joseph, Mich. ELECTRONIC TIMER ESCAPEMENT AND COIN COUNTER. Patent dated Sept. 27, 1970. Disclaimer filed Feb. 21, 1973, by the assignee, *Whirlpool Corporation.*

Hereby enters this disclaimer to claims 7, 8, 9, 15, 16, 23, 26, 28, 34, 35, 36, 41, 42 and 43, of said patent.

[*Official Gazette November 13, 1973.*]