United States Patent

Potter

[15] **3,648,854**

[45] **Mar. 14, 1972**

[54] REACH-EXTENSION ATTACHMENT FOR WORK TRANSFER DEVICE

[72] Inventor: **Ronald D. Potter**, Waterford, Mich.

[73] Assignee: **Erie Engineering Company**, Troy, Mich.

[22] Filed: **Apr. 3, 1970**

[21] Appl. No.: **25,517**

[52] **U.S. Cl.** .....**214/1 BB**, 214/1 BC

[51] **Int. Cl.** **B66c 1/42**

[58] **Field of Search**.....214/1 BB, 1 B, 1 BC

[56] **References Cited**

UNITED STATES PATENTS

2,894,616	7/1959	Young	214/1 BB
3,488,692	1/1970	Oda	214/1 BC
3,543,947	12/1970	Devol	214/1 BC
3,233,750	2/1966	Bannon	214/1 BB

Primary Examiner—Gerald M. Forlenza
Assistant Examiner—George F. Abraham
Attorney—Barthel & Bugbee

[57] **ABSTRACT**

Replacing the workpiece-lifting arm on top of the vertically-reciprocating horizontally-turning lift piston rod of the Lifting and Swinging Work Transfer Device of Kirsch et al., U.S. Pat. No. 3,406,837 of Oct. 22, 1968, the present invention mounts a head adjustably holding a horizontal slide bearing sleeve in which is slidably mounted an elongated tubular arm. The forward end of this arm carries a stationary work-gripping jaw adjacent a movable work-gripping jaw on a piston rod extending through the arm to the piston head of a jaw-operating fluid-pressure cylinder mounted on the rearward end of the arm. Mounted on the bearing sleeve is an arm-extending fluid-pressure cylinder having a piston rod operatively connected by a drag link to the arm to advance that arm and extend the reach thereof.

4 Claims, 2 Drawing Figures

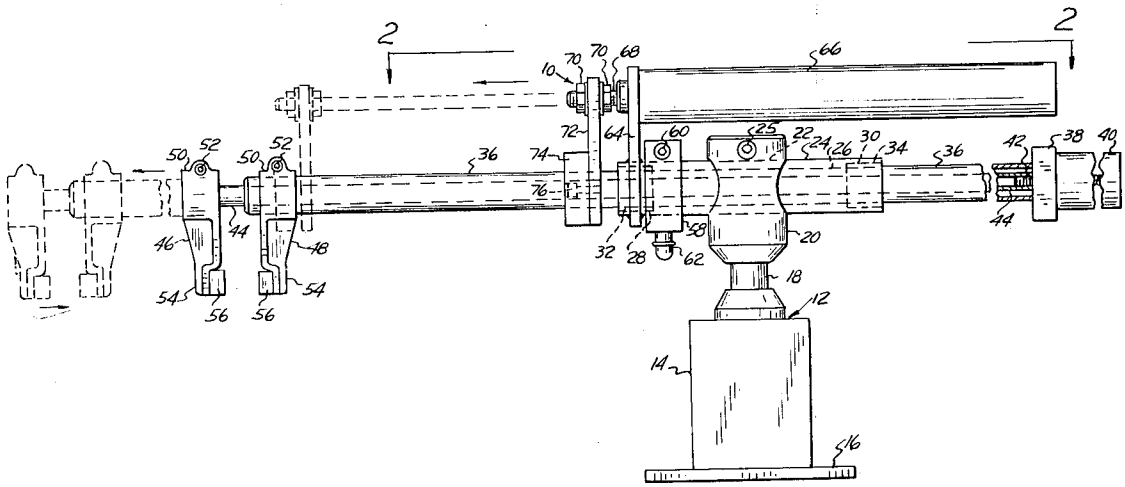

FIG. 2

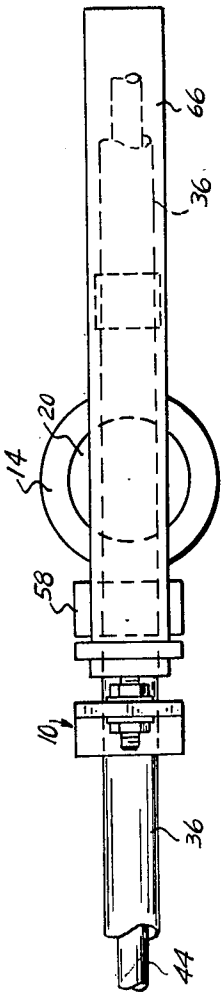

FIG. 1

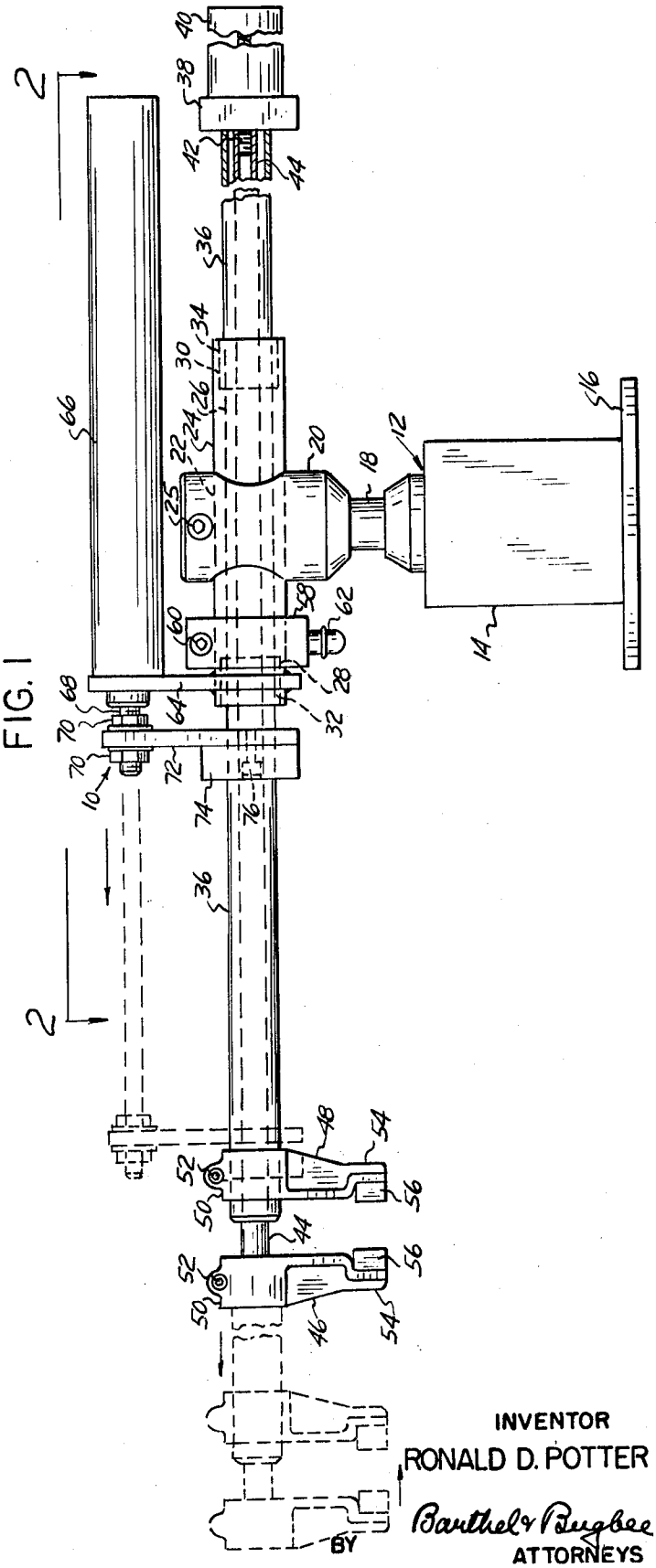

INVENTOR
RONALD D. POTTER
Barthel & Bugbee
BY
ATTORNEYS

REACH-EXTENSION ATTACHMENT FOR WORK TRANSFER DEVICE

In the drawing,

FIG. 1 is a side elevation of a reach-extension attachment for a work transfer device, according to one form of the invention in its retracted position, with its extended position shown in dotted lines; and

FIG. 2 is a fragmentary top plan view of the reach-extension attachment shown in FIG. 1.

Referring to the drawing in detail, FIGS. 1 and 2 show a reach-extension attachment, generally designated 10, for the work transfer device, generally designated 12 shown in detail in the Kirsch and Robb U.S. Pat. No. 3,406,837 issued Oct. 22, 1968 for Lifting and Swinging Work Transfer Device. The latter device is operated pneumatically and has a cylinder 14 mounted on a base 16 which is bolted or otherwise secured to the stamping press or other machine (not shown) served by the device 12. For the purposes of the present invention, it is believed sufficient to state that the device 12 has a piston rod 18 projecting upward from the top thereof which is capable both of rotation through a partial revolution and reciprocation vertically so as to rise and fall as well as swing horizontally in response to the operation of pneumatically-actuated mechanism contained within the cylinder 14. This actuates the piston rod 18 to automatically swing a work-gripping arm into position over a workpiece, to descend into gripping engagement with the workpiece, to ascend while lifting the workpiece, to swing horizontally to a predetermined location, and there to descend and release the workpiece, all as described and shown in the said U.S. Pat. No. 3,406,837. Experience with installations of the above patented device has indicated that in some applications thereof the range of the reach of the work-gripping arm is too limited. For installations requiring a greater range of operation, the present reach-extension attachment 10 has been invented.

The reach-extension attachment 10 is provided with a split adapter head 20 which is bored at its lower end to receive the upper end of the piston rod 18 whereby it replaces the work-gripping arm in the device of the said U.S. Pat. No. 3,406,937. The head 20 near its upper end is provided with a radial or transverse bore 22 which adjustably receives an elongated tubular arm sleeve bearing 24 clamped in position by a clamping screw 25 The sleeve bearing 24 contains a longitudinal bearing bore 26 with counterbores 28 and 30 in the forward and rearwards ends thereof. Secured within the counterbores 28 and 30 are bearing bushings 32 and 34 which slidably receive an elongated tubular arm 36 which is slidably mounted in the bearing bushings 32 and 34. The head 20 and sleeve bearing 24 collectively constitute an arm holder.

Mounted on the rearward end of the tubular arm 36 is the head 38 of a double-acting work-gripping jaw-actuating pneumatic cylinder 40 in which is reciprocably mounted a piston head (not shown) connected to a piston rod 42 which in turn is threaded into the rearward end of a tubular piston rod extension 44. The piston rod extension 44 projects forward through the entire length of the elongated tubular arm 36 and emerges from the forward end thereof to receive a movable work-gripping jaw 46, opposite which an oppositely facing fixed jaw 48 is fixedly mounted on the forward end of the arm 36. The heads 50 of the jaws 46 and 48 are split to receive clamping screws 52. The opposite ends 54 of the jaws 46 and 48 are tapered and each has secured thereto a work-gripping insert 56.

Mounted on and secured to the elongated tubular bearing sleeve 24 forward of the head 20 is a split collar 58 clamped thereto by a clamping screw 60. Secured in and extending radially downward from the collar 58 is a rounded-end position-locating dowel 62. Welded or otherwise fixedly secured to the forward end of the bearing sleeve 24 is a cylinder mounting plate 64, the upper end of which carries the forward end of a double-acting arm-extending pneumatic cylinder 66. The cylinder 66 contains a piston head (not shown) connected at its forward end to an arm-extending piston rod 68 which is threaded to receive a pair of clamping nuts 70 between which

is adjustably clamped a drag link 72, the lower end of which is bored for the passage of the elongated tubular arm 36. The drag link 72 is secured at its lower end to a split collar 74 by set screws 76 extending through the collar 74 into the drag link 72 on opposite sides of the tubular arm 36. It will be understood that the double-acting cylinders 40 and 66 are provided at their opposite ends with hose couplings for flexible hoses (not shown) by which compressed air can be admitted to opposite ends thereof to move their respective pistons and piston rods 42 and 68 in opposite directions in accordance with the settings of control valve means (not shown).

In the operation of the reach-extension attachment 10, let it be assumed that the parts are in their retracted positions shown in solid lines in FIGS. 1 and 2 and that it is desired to extend the tubular arm 36 to pick up a workpiece which is beyond the reach of the mechanism shown in the above-mentioned U.S. Pat. No. 3,406,837. To remove such a workpiece from a typical machine and transfer it to a place of disposal and deposit it thereat, the control valve means for the cylinder 14 is caused to admit compressed air to the lower end thereof to move the piston rod 18 thereof upward, carrying with it the reach-extension attachment 10 connected thereto by the head 20. Thereupon the admission of compressed air to the pneumatically-actuated mechanism within the cylinder p4 causes the piston rod 18 thereof to rotate, swing the head 20 and the remainder of the reach-extension attachment 10 carried thereby to a level in the machine below which the workpiece is located.

The control valve means for the arm-extending cylinder 66 is then caused to admit compressed air to the rearward or right-hand end of the cylinder 66 and exhaust it from the forward or left-hand end thereof, thereby causing the piston 68 thereof to move the drag link 72 and with it the tubular arm 36 forward to the left to the dotted line position shown in FIG. 1, which is assumed to be a position above the place in the machine where the workpiece is located.

The control valve means for the cylinder 14 is then operated to admit compressed air to the top thereof and discharge it from the bottom thereof to cause the piston rod 18 to descend, carrying with it the reach-extension attachment 10 and causing the now-open work-gripping jaws 46 and 48 to descend on opposite sides of the workpiece in the machine. The control valve means for the work-gripping jaw-actuating cylinder 40 now admits compressed air to the forward or left-hand end of the cylinder 40 and discharges it from the rearward end thereof, causing the piston rod 42 to move the piston rod extension 44 rearwardly to the right, closing the movable jaw 46 upon the fixed jaw 48 and thereby gripping the workpiece between the inserts 56 thereof. The valve means for the cylinder 14 is now caused to admit compressed air to the lower end thereof and discharge it from the upper end thereof, causing the piston rod 18 to move upward, carrying with it the reach-extension attachment 10 with the workpiece now gripped between the jaws 46 and 48. The pneumatically-actuated mechanism within the cylinder 14 is now caused to rotate the piston rod 18 thereof through the desired angle so as to swing the attachment 10 horizontally to a location near the location of disposal of the workpiece.

The valve means for the cylinder 66 is then caused to supply compressed air to the forward end thereof and to discharge it from the rearward end thereof, causing the piston rod 68 to move the drag link 72 together with the tubular arm 36 from the extended dotted line position of FIG. 1 to the retracted solid line position thereof, whereupon the valve means for the cylinder 40 is caused to admit compressed air to the rearward or right-hand end thereof and discharge it from the forward end thereof, causing the piston rod 42 and the extension 44 thereof to move forward to the left, causing the movable jaw 46 to move to the left away from the fixed jaw 48, separating the jaws and releasing the workpiece which then falls into a tote box, onto a moving conveyor, into a chute or other place of disposal. The pneumatic mechanism within the cylinder 14 is then caused to rotate the piston rod 18 reversely so as to

cause the reach-extension attachment 10 to swing back to its position of rest shown in FIG. 1, ready for operation in the above-described manner when the next workpiece is to be removed from the machine which it serves.

I claim:

1. An arm-extending attachment for the vertically-reciprocating horizontally-turning lift piston rod of a lifting and swinging work transfer device, said attachment comprising

an arm holder adapted to replace the existing mechanism on top of the lift piston rod,

an elongated horizontal arm slidably mounted in said arm holder,

a fluid pressure jaw-operating cylinder mounted on said arm and having a jaw-operating piston reciprocable therein,

a first work-gripping jaw mounted on said arm remote from said jaw-operating cylinder,

a second work-gripping jaw mounted adjacent said first work-gripping jaw for motion relatively thereto,

a jaw-operating motion-transmitting member operatively connecting said jaw-operating piston to at least one of said jaws.

a fluid pressure arm-extending cylinder mounted on said arm holder in spaced parallel relationship to said arm and having an arm-extending piston reciprocable therein,

an arm-extending motion-transmitting member operatively connecting said arm-extending piston to said arm,

and means on said cylinders for respectively supplying and discharging pressure fluid to and from said cylinders.

2. An arm-extending attachment, according to claim 1, wherein the mounting for the arm-extending cylinder includes a cylinder mounting member secured to said arm holder and extending transversely thereto, and wherein said arm-extending cylinder is mounted on said mounting member.

3. An arm-extending attachment, according to claim 1, wherein said arm-extending motion-transmitting member includes an arm-extending piston rod operatively connected to said arm-extending piston and also includes a drag link member operatively connecting said arm-extending piston rod to said arm.

4. An arm-extending attachment, according to claim 1, wherein said arm holder includes an adapter head having an adapter bore therein configured to fit the lift piston rod, and wherein a position-locating element is mounted on said arm holder in laterally spaced relationship to said adapter head bore.

* * * * *