June 18, 1929. E. J. GARVIN ET AL 1,717,676

HAND OPERATED CONCRETE BLOCK MOLD

Filed May 17, 1926 2 Sheets-Sheet 1

Fig. 1.

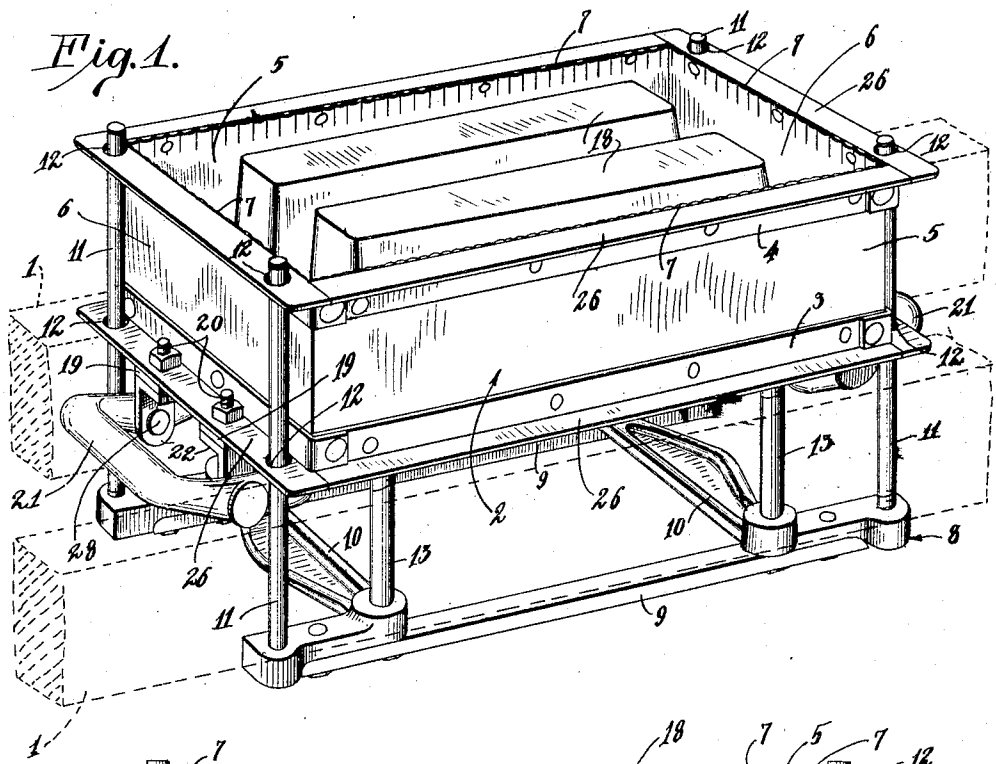

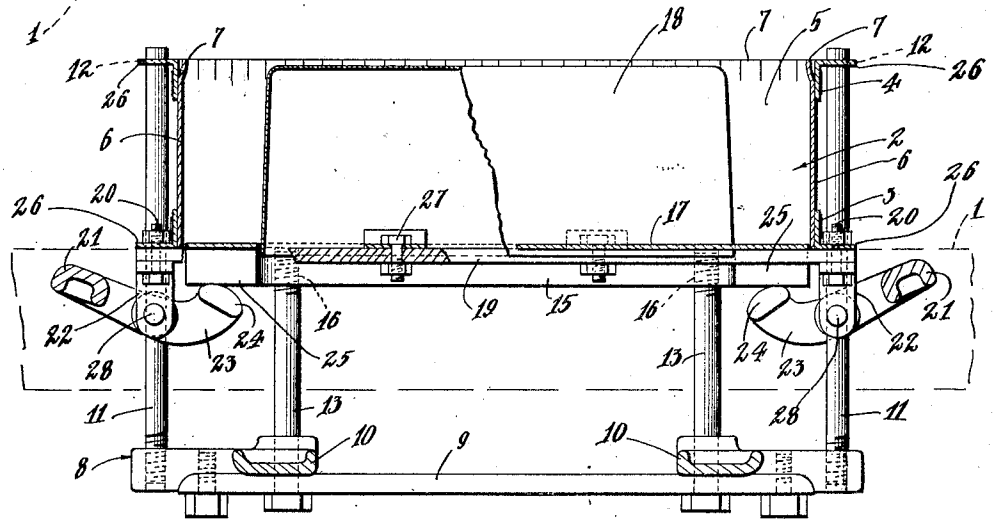

Fig. 3.

Inventors

Edward J. Garvin

Joseph B. Johnson

By Lyon & Lyon

Attorneys

June 18, 1929. E. J. GARVIN ET AL 1,717,676

HAND OPERATED CONCRETE BLOCK MOLD

Filed May 17, 1926 2 Sheets-Sheet 2

Fig. 2.

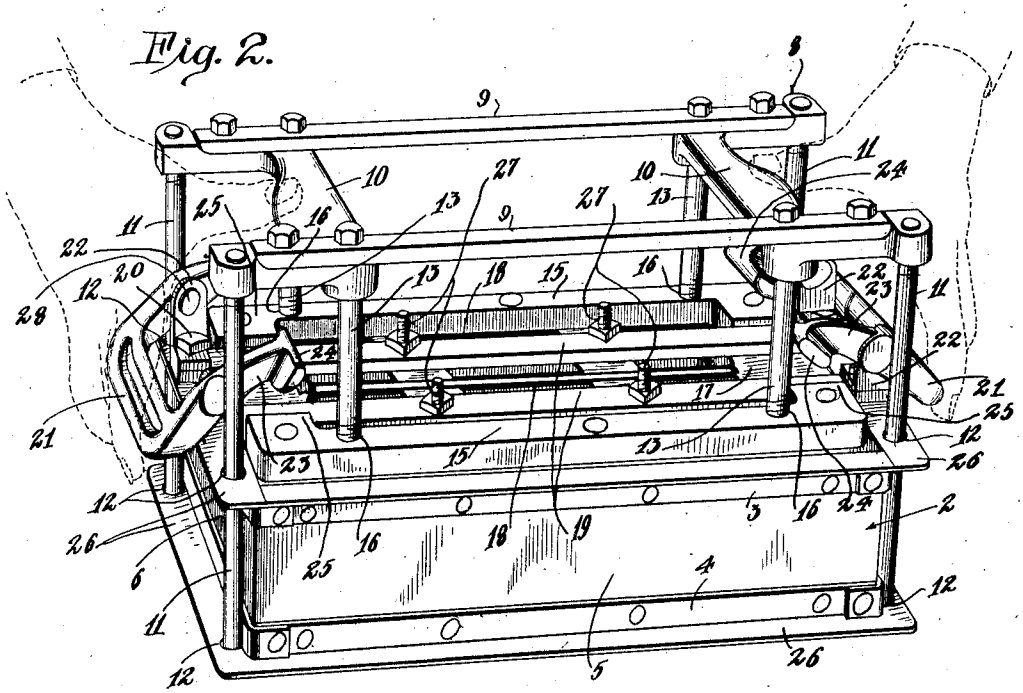

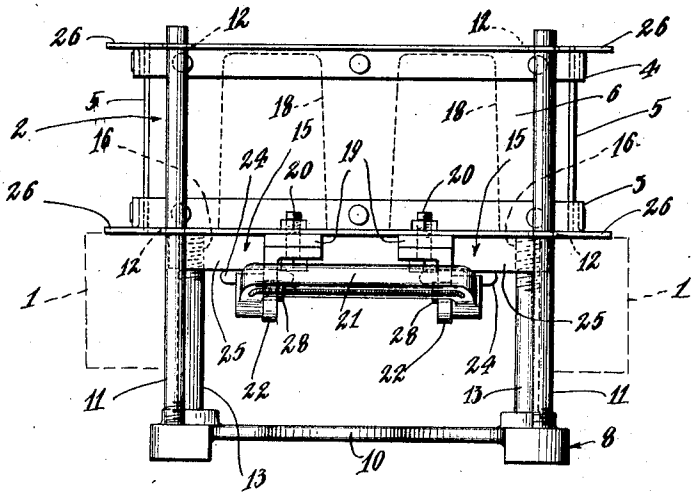

Fig. 4.

Inventors

Edward J. Garvin

Joseph B. Johnson

By Lyon & Lyon Attorneys

Patented June 18, 1929. 1,717,676

UNITED STATES PATENT OFFICE.

EDWARD J. GARVIN, OF GLENDALE, AND JOSEPH B. JOHNSON, OF LOS ANGELES, CALIFORNIA, ASSIGNORS TO CONCRETE ENGINEERING AND EQUIPMENT COMPANY, OF CLARKSDALE, ARIZONA, A CORPORATION OF ARIZONA.

HAND-OPERATED CONCRETE-BLOCK MOLD.

Application filed May 17, 1926. Serial No. 109,503.

This invention relates to a hand operated concrete block mold and is more particularly directed to a mold for forming cored concrete blocks, and which mold has hand actuated means for ejecting the molded blocks from the mold box.

The principal object of this invention is to provide a hand operated mold for forming concrete blocks which is of simple and inexpensive construction and easy to operate and which is extremely well adapted for the purpose of forming relatively small cored concrete blocks adapted for use in building or construction purposes.

Another object of this invention is to provide a mold for forming hollow concrete blocks, which mold includes a mold box which is adapted to be supported upon spaced supports to be filled with the concrete and which may then be picked from the spaced supports and shook to settle the concrete in the mold box around cores mounted therein, and which mold may, after the same has partially set, be inverted by an ejector mechanism operated by the hands of the laborer to move a false bottom through the mold box to eject the concrete blocks therefrom.

In this application, the term "concrete" is used in a broad or generic sense to include all combinations of cement, sand, water, or the like, and to include other dehydrated materials from which building blocks are constructed, such as gypsum and the like.

Other objects and advantages of this invention will be apparent from the following detailed description of a preferred embodiment thereof as illustrated in the accompanying drawings, in which drawings:

Figure 1 is an isometric view of a mold embodying this invention, and illustrating the same as supported between spaced molds and in position to receive the concrete for the formation of a block.

Figure 2 is a similar isometric view thereof, illustrating the mold in the inverted position to be actuated to eject the concrete block from the mold box.

Figure 3 is a central sectional side elevation thereof.

Figure 4 is an end elevation thereof.

In the preferred embodiment of this invention, illustrated in the accompanying drawings, 1 illustrates spaced supporting members which may be constructed of wood, steel, or like material, and upon which a molding box 2 is supported during the filling thereof with the concrete for the formation of the concrete blocks.

The molding box 2 preferably comprises a lower rim frame member 3 and an upper rim frame member 4 which may be of any desirable construction and which provide outwardly extending flanges 26. The flanges 26 of the lower rim frame member 3 support the molding box 2 on the spaced supports 1 during the filling of the molding box 2. The upper and lower rim frame members 3 and 4 are maintained in spaced relation and are secured to opposite side plates 5 and opposite end plates 6 which provide the body of the molding box 2. The side plates 5 and end plates 6 are, at their upper edges 7, corrugated so as to form irregular surfaces on the sides and ends of the molded blocks as the same are ejected from the molding box 2. Secured to the lower rim frame member 3 in spaced relation are spaced core supporting bars 19, which spaced core supporting bars 19 are secured to tapered cores 18 at spaced points throughout the length of the tapered cores 18 and by any suitable means such as illustrated at 27.

Means are provided for ejecting the molded blocks from the molding box 2 after the same have set or partially set, and which means preferably comprise an ejector frame 8 which might be constructed of spaced bars 9 which are secured together in spaced relation by means of a pair of spaced cross-brace castings 10. Screw-threaded to the outer ends of the cross-brace castings 10 are corner post guide rods 11 which extend through bores 12 formed in the flanges 26 of the upper and lower rim frame members 3 and 4, respectively, so as to provide guides for the ejector frame 8 as the same is moved to eject the molded blocks from the molding box 2.

Secured to the cross-brace castings 10 are false bottom supporting posts 13 which are at their upper ends secured to spaced false bottom removing castings 15, as indicated at 16. Secured to the spaced castings 15 is the false bottom 17 which is cut away around the base of the tapered members 18 so as to permit movement of the false bottom 17 over the said members 18 during the ejection of the cord blocks from the molding box 2.

Secured to the flanges 26 of the lower rim

frame members 3 by means of bolts 20, which likewise secure the spaced core supporting bars 19 in position, are spaced brackets 22 to which ejector frame actuating handles 21 are pivotally supported at pins 28 which are formed integral with the said handles 21. The handles 21 have inwardly projecting extensions 23 which are provided at their inner ends with engaging feet 24 which are adapted to engage lateral extensions 25 of the spaced false bottom removing castings 15.

In order to eject the molded blocks from the molding box 2 after the mold has been inverted, the operator of the device grips the ejector frame actuating handles 21 with his fingers and places his thumbs upon the cross-brace castings 10 and by exerting pressure upon the handles 21, the molding box 2 is caused to move upwardly along the guide rods 8 so that as the false bottom 17 remains stationary, the molded blocks are forced from the molding box 2, thereby stripping or ejecting the blocks from the mold.

Having fully described a preferred embodiment of our invention, it is to be understood that we do not wish to be limited to the exact details herein set forth which may obviously be varied without departing from the spirit of our invention as set forth in the appended claim.

We claim:

In a device of the class described, the combination of a molding box, an ejector frame, a false bottom for the said box carried by the ejector frame, a guide secured to the ejector frame for guiding the molding box, fulcrumed handles secured to the said molding box and adapted to be gripped and actuated by the fingers of the hands to engage said ejector frame to move the molding box relative to said false bottom, and cross-braces secured to said frame in position to provide pressure blocks to be engaged by the thumbs of the hands when actuating said fulcrumed handles.

Signed at Los Angeles, California, this 7 day of May, 1926.

JOSEPH B. JOHNSON.
EDWARD J. GARVIN.