March 14, 1939. E. VAN DER PYL 2,150,886

GRINDING WHEEL

Filed Sept. 23, 1937

FIG. 2

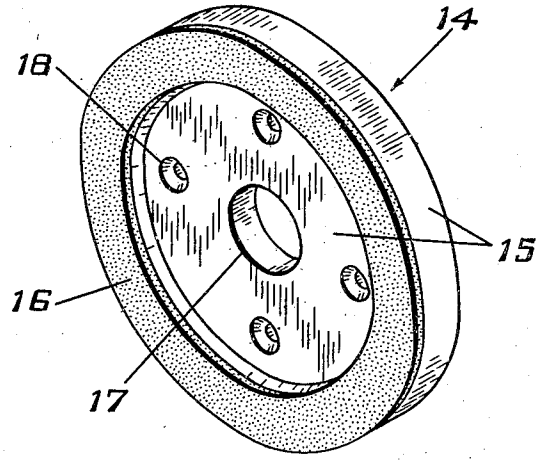

FIG. 1

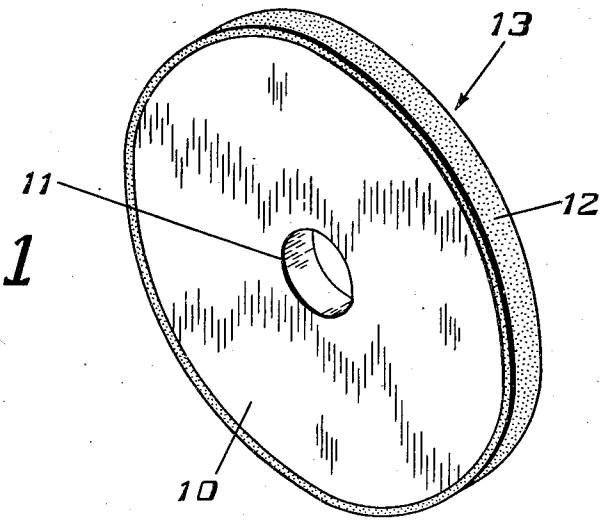

Inventor

EDWARD VAN DER PYL

By George Compton & Co.

Attorney

Patented Mar. 14, 1939 2,150,886

UNITED STATES PATENT OFFICE

2,150,886

GRINDING WHEEL

Edward Van der Pyl, Holden, Mass., assignor to Norton Company, Worcester, Mass., a corporation of Massachusetts

Application September 23, 1937, Serial No. 165,367

6 Claims. (Cl. 51—280)

The invention relates to grinding wheels, and with regard to its more specific features to diamond grinding wheels.

One object of the invention is to provide a grinding wheel structure involving the use of a central disk and an abrasive rim or face in which the disk is an excellent heat conductor. Another object of the invention is to provide a disk or center for a diamond grinding wheel which may be effectively molded under the worst conditions of humidity and atmospheric heat. Another object of the invention is to provide a composite wheel having a non-grinding center of such characteristics that it can be effectively used to ream or lap a hole by thermal expansion of the center.

Another object of the invention is to provide a composition for the manufacture of a wheel center of excellent characteristics for molding. Another object of the invention is to provide a composite wheel having a non-abrasive center of exceedingly attractive appearance. Another object of the invention is to provide a center of the type indicated of porous characteristics. Another object of the invention is to provide a center of the type indicated of superior strength. Another object of the invention is to provide a center of excellent adhesive properties in connection with abrasive bearing resinoid material.

Other objects will be in part obvious or in part pointed out hereinafter.

In the accompanying drawing showing two of many possible embodiments of the mechanical features of my invention,

Figure 1 shows a cup-shaped wheel grinding on one annular edge thereof, and

Figure 2 shows a disk-shaped wheel having an annular rim for peripheral grinding.

Using the composition of matter hereinafter defined, and preferably with the use of diamond abrasive, I may manufacture grinding wheels according to the method disclosed in Letters Patent to Baalis Sanford No. 1,981,970. I provide a quantity of finely divided metal. This may be in the form of metal powders such as are used for painting, but I prefer a finely divided metal powder of a granular rather than a flaky nature and of the type known as atomized metal powder. I may also use finely divided electrolytic metal.

While, so far as certain features of the invention are concerned, I may use many different metals, there are distinct advantages in the use of aluminum in the practice of my invention. The ultimate grinding wheel should be as light as possible in order that vibration on the spindle shall be reduced to a minimum. Furthermore, I have found that the cost of the article when using aluminum is considerably less than when using certain other metal powders because the real cost is a per volume cost rather than a per weight cost. Aluminum does not corrode rapidly and, therefore, has distinct advantages over the ferrous metals. The particle size of the aluminum is preferably 100 mesh grit size and smaller.

I provide a quantity of resinoid, otherwise known as synthetic resin, in powdered form. I prefer to use very finely divided resinoid powders of the order of 200 mesh or finer. I may use any commercially available resinoid. For example, I may use and prefer to use a phenol-formaldehyde resin of the type sometimes referred to as "Bakelite". However, my invention may be readily practiced with the use of any one of the alkyd resins constituting the condensation product of a polyhedric alcohol with a polybasic acid. Examples of these are the glyptal resin which is the condensation product of glycerol with phthalic anhydride. Other alkyd resins involving the use of other acids such as citric acid or the use of other alcohols such as pentaerythritol may be used.

Instead of the polymerizable resins I may also use thermoplastic resins or any one of the natural resins, such as shellac or the like. The term "resin" is, therefore, to be understood to cover both synthetic and natural resins of varying types.

I take one part of the resin and ten parts of the aluminum by weight. I may use as much as 25% by volume of the resin but I prefer to use a lesser amount. I prefer to use at least 5% and preferably more of the resin by volume.

The preferred proportion is, as stated, one part by weight of resin to ten parts by weight of aluminum, which is the same as 14.8 parts by volume of resin to 70 parts by volume of aluminum.

I take the designated proportions of powdered metal and powdered resin, for example aluminum and phenol-formaldehyde, and mix them thoroughly in a tumbling barrel. The mixing should be carried on until the powders are thoroughly mixed and the resin distributed throughout the mass of aluminum powder. I provide a suitable mold having the shape of the grinding wheel center to be manufactured. Referring now to Figure 1, I provide a cylindrical mold of the same size as the center 10. I place a suitable quantity of the mixture of resin and aluminum in the mold and press the mixture with heat. I use a hot press which is heated to a temperature of in the neighborhood of 160° C. I maintain the heat at

this temperature for from five to twenty-five minutes.

I provide a volume of aluminum and resin as compared with the volume of the mold for the center 10 such that the center will have 15.2% of pores. Thus the center 10 consists of a cylindrical disk with a central hole 11 and comprises seventy parts by volume of aluminum, 14.8 parts by volume of resin and 15.2 parts of pore space. Characteristics of this disk are that it is extremely light and ductile, readily transmits heat, and will form a good adhesive union with a mixture of abrasive grains and resinoid. The porosity of the disk cannot be discerned with the eye. In fact, the disk appears to be a solid casting of aluminum.

Proceeding now according to the method clearly described in the patent to Sanford No. 1,981,970, and having prepared a mixture of diamond grains and resin, for example phenol-formaldehyde, and preferably the same resin that is used for manufacture of the disk 10, I mold a rim 12 of diamonds bonded with resin around the disk 10. As described in the patent referred to, the molding is preferably done in a hot press. After the rim 12 is thus molded onto the disk 10, I may place the grinding wheel 13 thus formed in an oven for further curing. Such further curing not only cures the resin in the rim portion 12 but also in the disk portion 10.

I do not wish to be limited to the details of curing the resin in the disk portion 10 or in the rim portion 12. I may initially cure the resin of the disk portion 10 for a much longer period than twenty-five minutes, for example for many hours. The thermo-irreversibility of the disk 10 will depend, in the first place, upon whether a thermo-irreversible polymerizable resin is used, and in the second place, upon the temperature and time involved in curing. These matters may be varied in accordance with known experience and knowledge thereon. I have found that after only a short time in the hot press, the disk 10 has cohesion enough to hold together under further handling.

By providing suitable molds, I may readily form the wheel 14 of Figure 2. This wheel comprises a center 15 which is cup-shaped and which comprises resin plus metal as hereinbefore defined. A face 16 of resin bonded abrasive material, preferably diamonds, is molded onto the center 15 under heat and pressure. This wheel likewise has a central hole 17 and a plurality of small countersunk holes 18. The hole 17 facilitates mounting the wheel upon a spindle and the holes 18 serve to attach the wheel to a flange for driving purposes.

By reason of the porosity of the disks 10 and 15, curing is readily accomplished since gases formed, for example ammonia and water vapor, readily pass off. It is found that the centers 10 and 15 can be readily stripped from the molds as they have a low coefficient of friction.

A particular advantage of wheels made according to the invention is that they may expand and contract under heat and pressure without separation of the abrasive rim from the disk or center and without cracking of any part of the wheel. The wheels are thus especially adapted for use in internal grinding where the wheel is thermally expanded during the grinding operation according to the disclosure of an application of William E. Hoke, Serial No. 155,845 filed July 27, 1937.

In the preferred form of the invention, the abrasive material is diamond and the disk 10 and center 15 constitute mounting portions of the wheel. Many shapes and arrangements other than those shown may be adopted in a wheel of two-part construction. The diamond abrasive rim 12 or face 16 is most effectively used and when it has been completely used up, the center or disk may be discarded or, in case a thermoplastic resin was used, it may be broken up and remolded.

It will thus be seen that there has been provided by this invention an article in which the various objects hereinabove set forth together with many thoroughly practical advantages are successfully achieved. As various possible embodiments might be made of the mechanical features of the above invention and as the art herein described might be varied in various parts, all without departing from the scope of the invention, it is to be understood that all matter hereinbefore set forth or shown in the accompanying drawings is to be interpreted as illustrative and not in a limiting sense.

I claim:

1. A grinding wheel consisting solely of a grinding portion comprising diamonds bonded with resin and a mounting molded solely from finely divided metal and resin, the resin being 25% by volume or less of the mounting.

2. A grinding wheel comprising a mounting consisting solely of aluminum grain bonded with resin and a grinding portion of diamond grain bonded with resin, the mounting and the grinding portion being integrally molded together.

3. A grinding wheel comprising a mounting consisting solely of finely divided metal bonded with resin and a grinding portion of diamond grain bonded with resin, the mounting and the grinding portion being integrally molded together.

4. A grinding wheel comprising a mounting consisting solely of aluminum grain bonded with resin and a grinding portion of abrasive grain bonded with resin, the mounting and the grinding portion being integrally molded together.

5. A grinding wheel comprising a mounting of a composition consisting solely of metal powder bonded with resin, there being not more than 25% by volume of the resin, and a grinding portion consisting solely of abrasive grain bonded with resin, the mounting and the grinding portion being integrally molded together.

6. A grinding wheel comprising a center mounting consisting solely of metal particles mixed with resin and a grinding portion comprising abrasive grains bonded together, the entire wheel including the mounting being an integral piece, and the amount of resin in the mounting portion being not greater than 25% by volume.

EDWARD VAN DER PYL.