United States Patent [19]

Genaro et al.

[11] **Patent Number: Des. 277,002**

[45] **Date of Patent: ** Jan. 1, 1985**

[54] **TELEPHONE STAND OR SIMILAR KEYBOARD ARTICLE**

[75] Inventors: **Donald M. Genaro**, Haworth, N.J.; **John N. McGarvey**, Drexel Hill, Pa.

[73] Assignee: **AT&T Bell Laboratories**, Murray Hill, N.J.

[**] Term: **14 Years**

[21] Appl. No.: **573,424**

[22] Filed: **Jan. 24, 1984**

Related U.S. Application Data

[63] Continuation-in-part of Ser. No. 345,559, Feb. 4, 1982, , which is a continuation-in-part of Ser. No. 84,067, Oct. 12, 1979, Pat. No. Des. 265,401.

[52] **U.S. Cl.** **D14/60**; D14/62

[58] **Field of Search** ..... D14/52, 85, 53, 76, D14/59, 66, 60, 65, 62, 58, 115, 101, 92; 179/90 K, 178, 179; D25/80, 92; D18/6, 7

[56] **References Cited**

U.S. PATENT DOCUMENTS

D. 165,017	10/1951	Metzler	D14/58
D. 196,652	10/1963	Beals et al.	D14/65
D. 206,227	11/1966	Cuccio et al.	D14/57
D. 219,383	12/1970	Fox	D14/52
D. 221,951	9/1971	Kindley	D14/115
D. 247,174	2/1978	Janda	D14/57
D. 247,813	5/1978	Genaro et al.	D14/60
D. 250,891	1/1979	Renard	D14/3
D. 255,235	6/1980	Kepford	D14/101
D. 260,643	9/1981	Foggia et al.	D14/60
D. 262,215	12/1981	Obst	D14/60
D. 264,600	5/1982	Yamasaki et al.	D18/7
D. 264,715	6/1982	Trussler	D14/60
D. 265,089	6/1982	Bee	D14/60
D. 270,053	8/1983	Bosch	D14/66
D. 271,394	11/1983	Brown et al.	D14/66
3,472,974	10/1969	McGough	179/90 K
3,967,273	6/1976	Knowlton	179/90 K
4,436,965	3/1984	Morse	179/178

OTHER PUBLICATIONS

Keyboard, article by Tolman & Vaughan, Technical Digest No. 67, 6-1982 (Western Electric); p. 23; showing of keyboard and frame.

Reprint from *Digest News,* 8/8/77, Cahners Publication; Membrane switches on p. 3 of reprint; pattern showing at lower half page.

Data Entry Keyboard, shown p. 100A, IEEE Spectrum; 1-78, Oak Industries, Inc., Switch Div. Crystal Lake, Il.

Standard Electric Article re LargeKey for Disabled Telephone Users, p. 100 Telephone Mag. 9/8/80, pp. 100, 102.

Primary Examiner—Wallace R. Burke

Assistant Examiner—Horace B. Fay

Attorney, Agent, or Firm—H. L. Newman

[57] **CLAIM**

The ornamental design for a telephone stand or similar keyboard article, substantially as shown and described.

DESCRIPTION

FIG. **1** is a top front perspective of our design for a telephone stand or similar keyboard article;

FIG. **2** is a front elevation thereof;

FIG. **3** is a rear elevation thereof;

FIG. **4** is a side elevation thereof, the opposite side being essentially a mirror image of the side shown; and

FIG. **5** is an end elevation thereof, the opposite end being essentially a mirror image of the end shown.

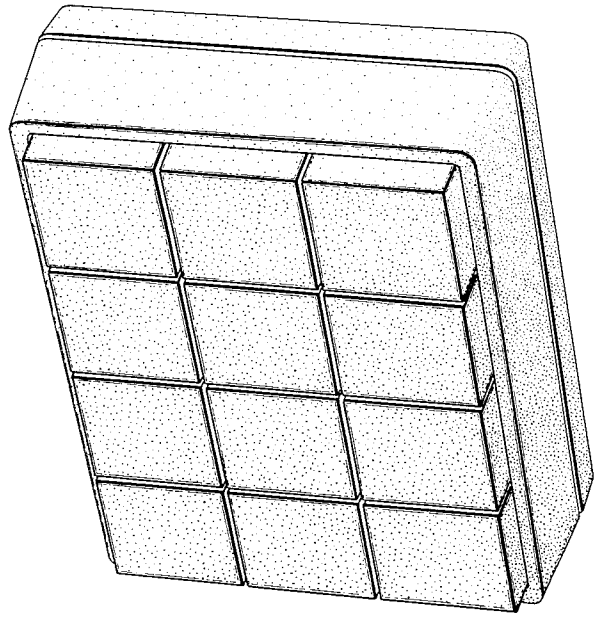

FIG. 1

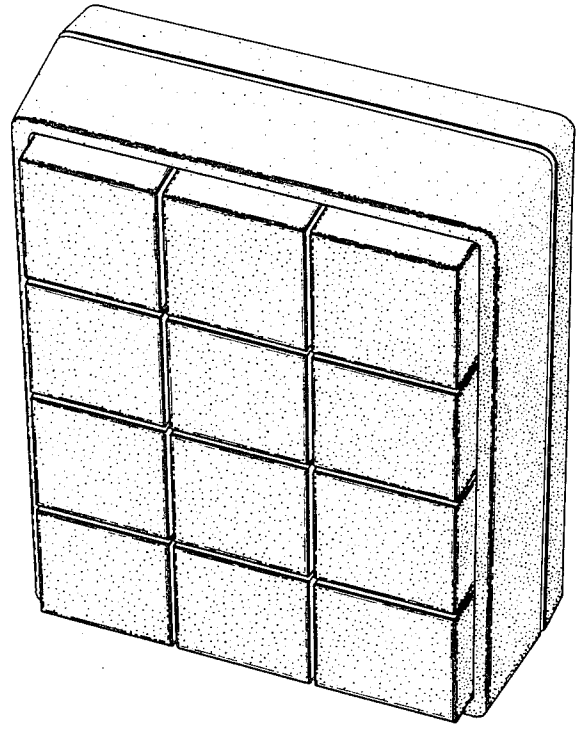

FIG. 3

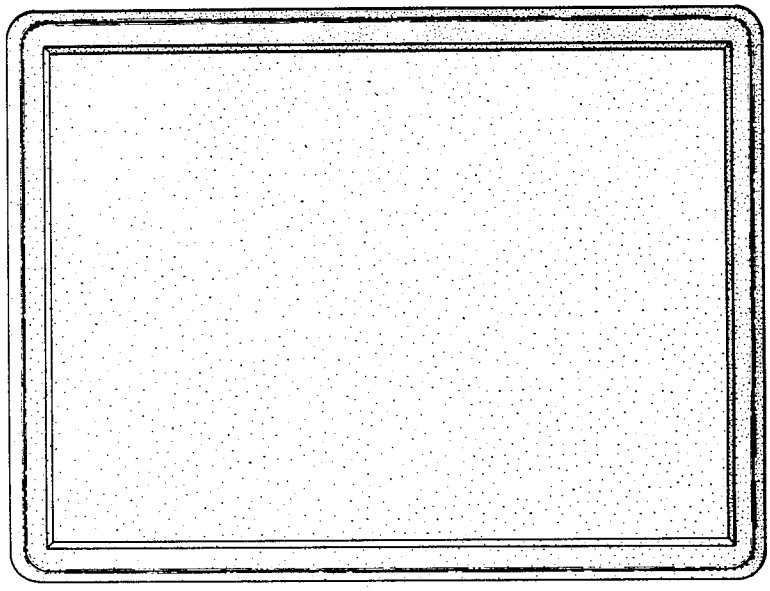

FIG. 2

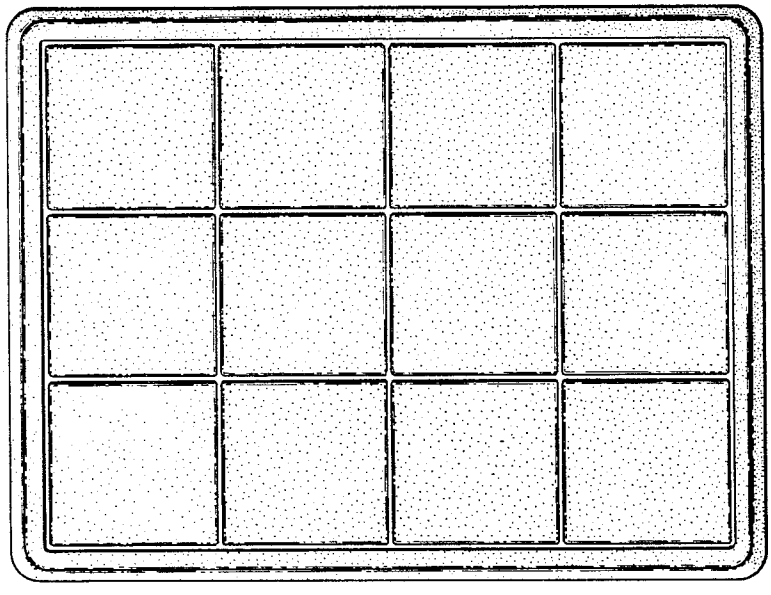

FIG. 4

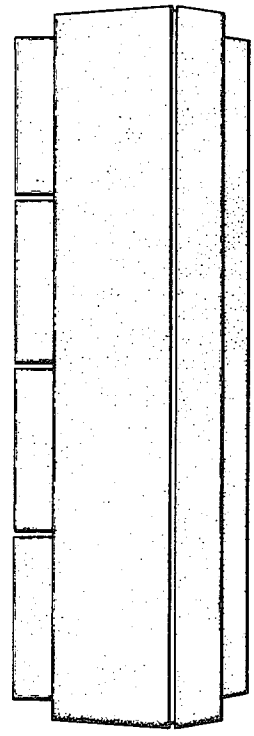

FIG. 5

