Office de la Propriété Intellectuelle du Canada
Un organisme d'Industrie Canada

Canadian Intellectual Property Office
An agency of Industry Canada

CA 2841835 C 2017/02/21

(11)(21) 2 841 835

(12) BREVET CANADIEN
CANADIAN PATENT

(13) C

(86) Date de dépôt PCT/PCT Filing Date: 2012/07/13
(87) Date publication PCT/PCT Publication Date: 2013/01/17
(45) Date de délivrance/Issue Date: 2017/02/21
(85) Entrée phase nationale/National Entry: 2014/01/09
(86) N° demande PCT/PCT Application No.: US 2012/046649
(87) N° publication PCT/PCT Publication No.: 2013/010072
(30) Priorité/Priority: 2011/07/14 (US61/507,710)

(51) Cl.Int./Int.Cl. *B26B 21/56* (2006.01)

(72) Inventeurs/Inventors:
SKROBIS, KENNETH JAMES, US;
PARKER, JEFFREY STUART, US;
SHEN, BIN, US;
STONE, MATTHEW ROBERT, US;
NISBY, JOHN JOSEPH, US;
SLATTERY, JASON SCOTT, US;
JU, YONGQING, US

(73) Propriétaire/Owner:
THE GILLETTE COMPANY LLC, US

(74) Agent: MBM INTELLECTUAL PROPERTY LAW LLP

(54) Titre : LAME DE RASOIR
(54) Title: RAZOR BLADE

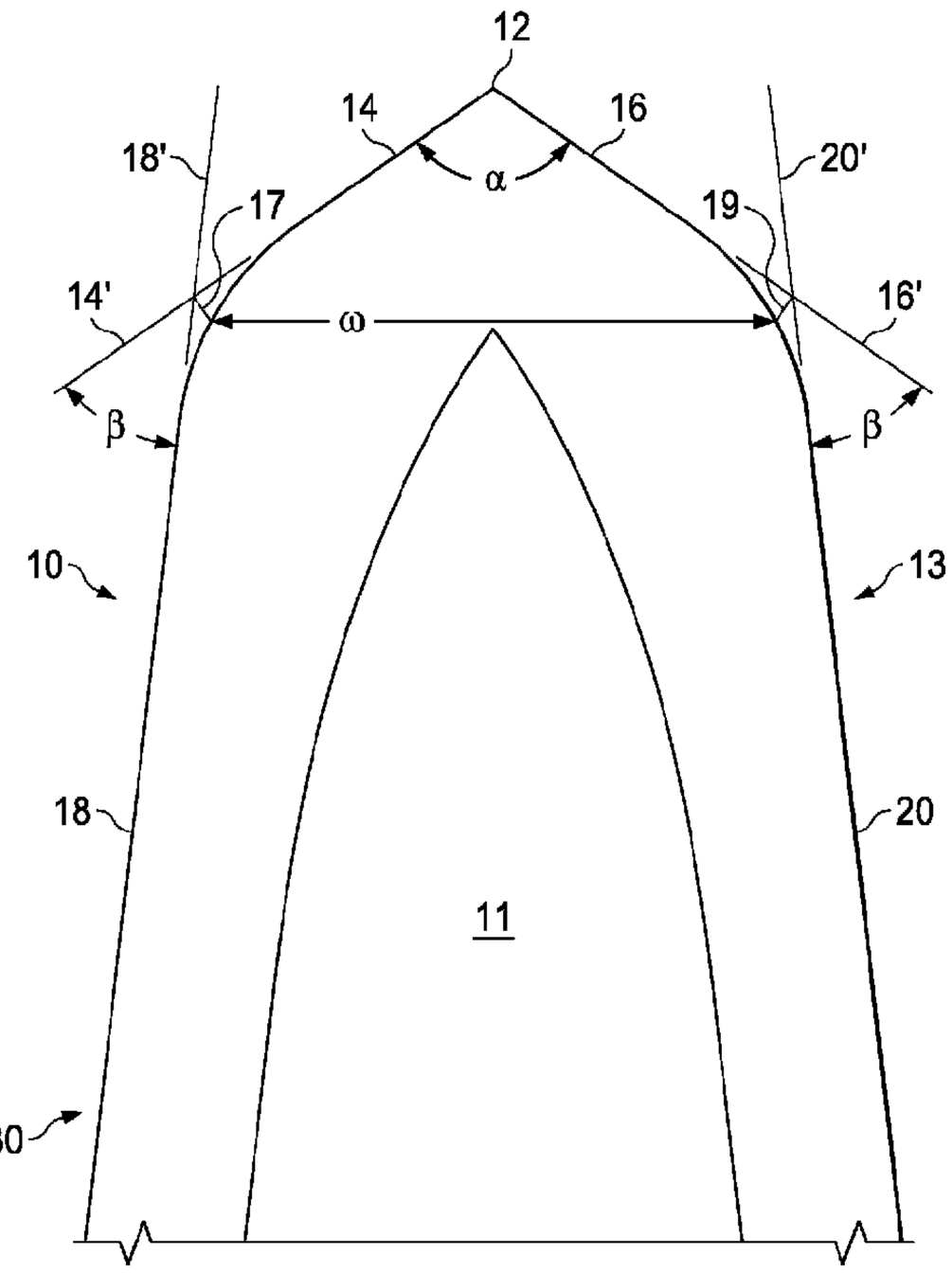

(57) Abrégé/Abstract:
A razor blade including a substrate with a coating joined to the substrate defining a coated blade. The coated blade including a cutting edge being defined by a blade tip having a tip radius of from 50 to 350 angstroms. The coated blade having a pair of first facets extending from the blade tip and a pair of second facets extending from the respective first facets, a facet angle from 90° to 135°, a facet width from 0.38 micrometers to 0.65 micrometers a wedge angle from 5° to 30°, and a thickness of between 0.8 and 1.5 micrometers measured at a distance of 1 micrometer from the blade tip.

(12) INTERNATIONAL APPLICATION PUBLISHED UNDER THE PATENT COOPERATION TREATY (PCT)

(19) World Intellectual Property Organization
International Bureau

(43) International Publication Date
17 January 2013 (17.01.2013)

WIPO | PCT

(10) International Publication Number
WO 2013/010072 A1

(51) International Patent Classification:
B26B 21/56 (2006.01)

(21) International Application Number:
PCT/US2012/046649

(22) International Filing Date:
13 July 2012 (13.07.2012)

(25) Filing Language: English

(26) Publication Language: English

(30) Priority Data:
61/507,710 14 July 2011 (14.07.2011) US

(71) Applicant *(for all designated States except US)*: **THE GILLETTE COMPANY** [US/US]; World Shaving Headquarters, IP/Legal Patent Department - 3E, One Gillette Park, Boston, Massachusetts 02127 (US).

(72) Inventors; and

(75) Inventors/Applicants *(for US only)*: **SKROBIS, Kenneth, James** [US/US]; 1 Carbone Circle, Maynard, Massachusetts 01754 (US). **PARKER, Jeffrey, Stuart** [US/US]; 333 Ricciuti Drive, Apt. 1514, Quincy, Massachusetts 02169 (US). **SHEN, Bin** [CN/US]; 72 Euston Road, Apt. 305, Brighton, Massachusetts 02135 (US). **STONE, Matthew, Robert** [US/US]; 39 Joe Jenny Road, Oxford, Massachusetts 01540 (US). **NISBY, John, Joseph** [US/US]; 571 Brook Street, Hanson, Massachusetts 02341 (US). **SLATTERY, Jason, Scott** [US/US]; 101 Glen Rock Avenue, Maiden, Massachusetts 02148 (US). **JU, Yongqing** [US/US]; 63 Blacksmith Drive, Medfield, Massachusetts 02052 (US).

(74) Common Representative: **THE GILLETTE COMPANY**; c/o Timothy B. Guffey, The Procter & Gamble Company, Global Patent Services, 299 East Sixth Street, Sycamore Building, 4th Floor Cincinnati, Ohio 45202 (US).

(81) Designated States *(unless otherwise indicated, for every kind of national protection available)*: AE, AG, AL, AM, AO, AT, AU, AZ, BA, BB, BG, BH, BR, BW, BY, BZ, CA, CH, CL, CN, CO, CR, CU, CZ, DE, DK, DM, DO, DZ, EC, EE, EG, ES, FI, GB, GD, GE, GH, GM, GT, HN, HR, HU, ID, IL, IN, IS, JP, KE, KG, KM, KN, KP, KR, KZ, LA, LC, LK, LR, LS, LT, LU, LY, MA, MD, ME, MG, MK, MN, MW, MX, MY, MZ, NA, NG, NI, NO, NZ, OM, PE, PG, PH, PL, PT, QA, RO, RS, RU, RW, SC, SD, SE, SG, SK, SL, SM, ST, SV, SY, TH, TJ, TM, TN, TR, TT, TZ, UA, UG, US, UZ, VC, VN, ZA, ZM, ZW.

(84) Designated States *(unless otherwise indicated, for every kind of regional protection available)*: ARIPO (BW, GH, GM, KE, LR, LS, MW, MZ, NA, RW, SD, SL, SZ, TZ,

[Continued on next page]

(54) Title: RAZOR BLADE

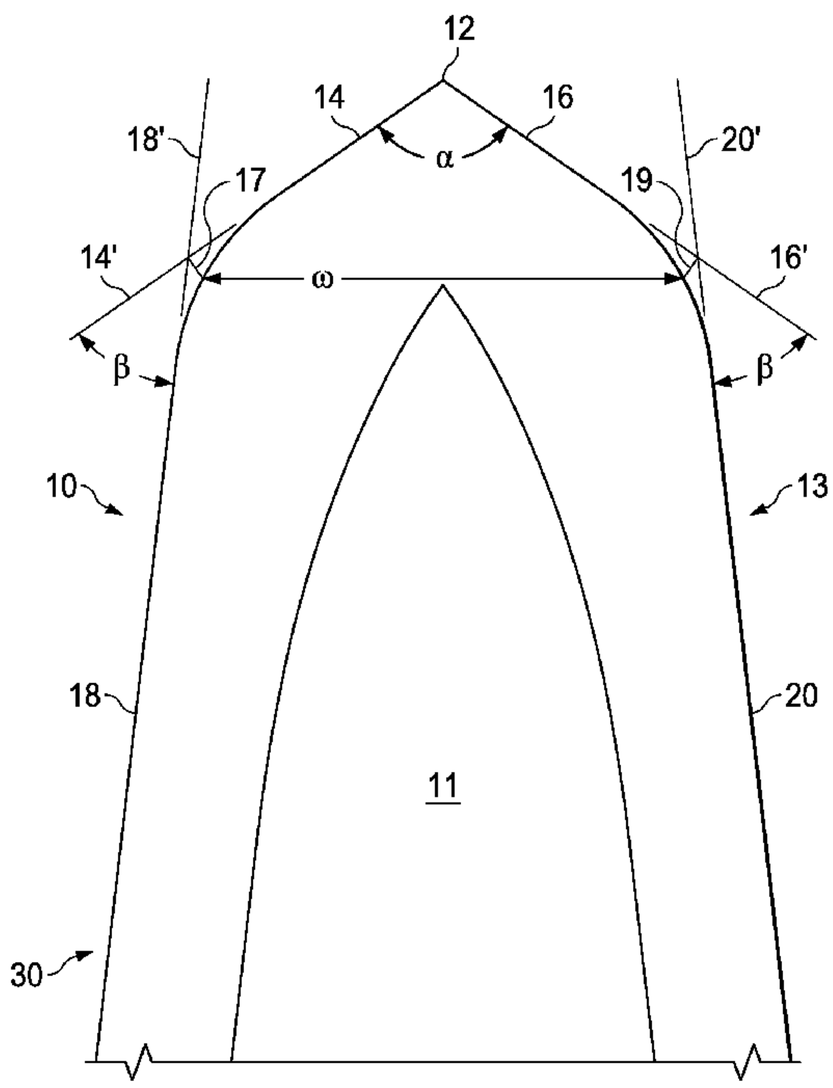

FIG. 2

(57) Abstract: A razor blade including a substrate with a coating joined to the substrate defining a coated blade. The coated blade including a cutting edge being defined by a blade tip having a tip radius of from 50 to 350 angstroms. The coated blade having a pair of first facets extending from the blade tip and a pair of second facets extending from the respective first facets, a facet angle from 90° to 135°, a facet width from 0.38 micrometers to 0.65 micrometers a wedge angle from 5° to 30°, and a thickness of between 0.8 and 1.5 micrometers measured at a distance of 1 micrometer from the blade tip.

WO 2013/010072 A1

WO 2013/010072 A1

UG, ZM, ZW), Eurasian (AM, AZ, BY, KG, KZ, RU, TJ, TM), European (AL, AT, BE, BG, CH, CY, CZ, DE, DK, EE, ES, FI, FR, GB, GR, HR, HU, IE, IS, IT, LT, LU, LV, MC, MK, MT, NL, NO, PL, PT, RO, RS, SE, SI, SK, SM, TR), OAPI (BF, BJ, CF, CG, CI, CM, GA, GN, GQ, GW, ML, MR, NE, SN, TD, TG).

Published:

— *with international search report (Art. 21(3))*

RAZOR BLADE

TECHNICAL FIELD

This invention relates to razors and more particularly to razor blades with sharp and durable cutting edges having a large forward profile near the tip and a narrow profile further away from the tip.

BACKGROUND

A razor blade is typically formed of a suitable substrate material such as stainless steel, and a cutting edge is formed with a wedge-shaped configuration with an ultimate tip having a radius. Hard coatings such as diamond, amorphous diamond, diamond-like carbon-(DLC) material, nitrides, carbides, oxides, or ceramics are often used to improve strength, corrosion resistance, and shaving ability, maintaining needed strength while permitting thinner edges with lower cutting forces to be used. Polytetrafluoroethylene (PTFE) can be used to provide friction reduction. Layers of niobium or chromium containing materials can aid in improving the binding between the substrate, typically stainless steel, and hard carbon coatings, such as DLC.

It is desirable to alter the shape of the razor blade to achieve a razor blade with a low cutting force, while at the same time improving safety and comfort. By finding the ideal edge design it is possible to provide a low cutting force blade that is safer on the skin leading to a more comfortable shave.

Prior blades improved shaving comfort by reductions in tip radii and overall profile cross-section, reducing the tug-and-pull associated with cutting through hair. These sharper edges however required special implementation to avoid discomfort associated with the blade-skin interactions. Also, as a consequence of thinning the blade bevel profile, strength and durability can be compromised.

The present invention addresses the problems of balancing the desire for low cutting force, increased safety, and increased comfort. The present invention provides a blade tip having a wider forward profile near the blade tip with a small tip radius while maintaining a narrow profile away from the blade tip.

The large forward profile near the tip in conjunction with a narrow blade profile further away from the tip provides a low cutting force blade edge that has less propensity to engage the skin allowing the skin to glide over the edge without nicking, cutting or scraping. Such a blade reduces irritation and increases comfort.

SUMMARY

The present invention provides a razor blade comprising a substrate with a coating joined to the substrate defining a coated blade. The coated blade has a cutting edge being defined by a blade tip having a tip radius of from 50 to 350 angstroms, preferably from 100 to 300 angstroms. The coated blade comprises a pair of first facets extending from the blade tip and a pair of second facets extending from respective first facets. The coated blade comprises a facet angle from 90° to 135°, a facet width from 0.38 micrometers to 0.65 micrometers a wedge angle from 5° to 30°. The coated blade has a thickness of between 0.8 and 1.5 micrometers measured at a distance of 1 micrometer from the blade tip.

Preferably, the coated blade has a thickness of between 1.1 and 1.7 micrometers measured at a distance of 2 micrometers from the blade tip. Preferably, the coated blade has a thickness of between 1.6 and 2.1 micrometers measured at a distance of 4 micrometers from the blade tip. Preferably, the coated blade has a thickness of between 0.38 and 0.67 micrometers measured at a distance of 0.25 micrometers from the blade tip. Preferably, the coated blade has a thickness of between 0.55 and 0.95 micrometers measured at a distance of 0.5 micrometers from the blade tip. Preferably, the coated blade has a thickness of between 2.66 and 3.16 micrometers measured at a distance of 8 micrometers from the blade tip. Preferably, the coated blade a thickness of between 4.06 and 5.06 micrometers measured at a distance of 16 micrometers from the blade tip.

Preferably, the substrate is a martensitic stainless steel having a carbide density of from 200 to 1000 carbides per 100 square micrometers as determined by optical microscopic cross-section.

The coating may comprise an adhesive layer joined to the substrate. The adhesive layer may comprise niobium.

The coating may comprise a hard coating layer joined to the adhesive layer. The hard coating layer may comprise an amorphous material containing carbon.

The coating may comprise an overcoat layer joined to said hard coating layer. The overcoat layer may comprise chromium.

A lubricious material may be applied to the overcoat layer. The lubricious material may comprise a polymer. The lubricious material may comprise polytetrafluoroethylene.

DESCRIPTION OF DRAWINGS

While the specification concludes with claims particularly pointing out and distinctly claiming the subject matter that is regarded as the present invention, it is believed that the invention will be more fully understood from the following description taken in conjunction with the accompanying drawings.

FIG. 1 is a diagrammatic view illustrating a razor blade of the present invention.

FIG. 2 is a diagrammatic view of the razor blade of Fig. 1

FIG. 3 is a diagrammatic view of the razor blade of Fig. 1.

FIG. 4 is a view of a coated razor blade illustrating the method for determining the tip radius of the coated blade

DETAILED DESCRIPTION

Referring now to Figs. 1-3, there is shown a razor blade 10 including substrate 11 with a coating 30 joined to the substrate 11 resulting in a coated blade 13. The coating 30 may include one or more layers. The coating 30 shown includes adhesive layer 34, hard coating layer 36, and overcoat layer 38. The substrate 11 is typically made of stainless steel though other materials can be employed.

Adhesive layer 34 is used to facilitate bonding of the hard coating layer 36 to the substrate 11. Examples of suitable adhesive layer materials are niobium, titanium, and chromium containing material. The adhesive layer may have a thickness from 100 angstroms to 500 angstroms. A particular adhesive layer is made of niobium having a

thickness from 150 angstroms to 350 angstroms. PCT 92/03330 describes use of a niobium as an adhesive layer.

Hard coating layer or layers 36 provides improved strength, corrosion resistance and shaving ability and can be made from fine-, micro-, or nano-crystalline carbon-containing materials (e.g., diamond, amorphous diamond or DLC), nitrides (e.g., boron nitride, niobium nitride, chromium nitride, zirconium nitride, or titanium nitride), carbides (e.g., silicon carbide), oxides (e.g., alumina, zirconia), other ceramic materials (including nanolayers or nanocomposites), metals or metal alloys. The carbon containing materials can be doped with other elements, such as tungsten, titanium, silver, or chromium by including these additives, for example in the target during application by sputtering. The materials can also incorporate hydrogen, e.g., hydrogenated DLC. Preferably hard coating layer 36 is made of diamond, amorphous diamond, or DLC. A particular embodiment includes DLC less than 5,000 angstroms, preferably from 300 angstroms to 3,000angstroms. DLC layers and methods of deposition are described in U.S. Pat. No. 5,232,568. As described in the "Handbook of Physical Vapor Deposition (PVD) Processing, "DLC is an amorphous carbon material that exhibits many of the desirable properties of diamond but does not have the crystalline structure of diamond."

Overcoat layer 38 may be used to facilitate bonding of a lubricious material to the hard coating. Overcoat layer 38 is preferably made of chromium containing material, e.g., chromium or chromium alloys or chromium compounds that are compatible with polytetrafluoroethylene, e.g., CrPt. A particular overcoat layer is chromium 100-200 angstroms thick. Overcoat layer may have a thickness of from 50 angstroms to 500 angstroms, preferably from 100 angstroms to 300 angstroms. Other materials may be used for overcoat layer 38 to facilitate adhesion of particular lubricious materials.

Lubricious material40 may be used to provide reduced friction. The thickness of the lubricious material 40 is of course ignored for the purposes of calculating the dimensions of the coated blade 13. The lubricious material 40 may be a polymer composition or a modified polymer composition. The polymer composition may be polyfluorocarbon. A suitable polyflourocarbon is polytetrafluoroethylene sometimes referred to as a telomer. A particular polytetrafluoroethylene material is Krytox LW 2120 available from DuPont. This material is a nonflammable and stable dry lubricant

that consists of small particles that yield stable dispersions. It is furnished as an aqueous dispersion of about 20% solids by weight and can be applied by dipping, spraying, or brushing, and can thereafter be air dried or melt coated. The lubricious material is preferably less than 5,000 angstroms thick and could typically be 1,500 angstroms to 4,000 angstroms thick, and can be as thin as 100 angstroms, provided that a continuous coating is maintained. Provided that a continuous coating is achieved, reduced telomer coating thickness can provide improved first shave results. U.S. Pat. Nos. 5,263,256 and 5,985,459 describe techniques which can be used to reduce the thickness of an applied telomer layer.

The coated blade 13 includes a wedge-shaped sharpened edge having a blade tip 12 with first facets 14 and 16 that extend from blade tip 12. First facets 14 and 16 diverge as they extend from blade tip 12. Second facets 18 and 20 extend from first facets 14 and 16, respectively. Coated blade 13 has a facet angle α between first facets 14 and 16. Facet angle α ranges from 90° to 135°. Wedge angle β lies between the linear extension 14' of facet 14 and second facet 18, and linear extension 16' of facet 16 and second facet 20. The two wedge angles β will preferably be similar in degree if not identical. The wedge angles β ranges from 5° to 30°.

A line 17 perpendicular to linear extension 14' is drawn at the intersection of linear extension 14' and linear extension 18' of second facet 18. A line 19 perpendicular to linear extension 16' is drawn at the intersection of linear extension 16' and linear extension 20' of second facet 20. Facet width ω is measured between the intersection of line 17 and coated blade 13 and the intersection of line 19 and coated blade 13. Coated blade 13 has a facet width between 0.38 and 0.65 micrometers.

Blade tip 12 preferably has a radius of from 50 to 350 angstroms. Blade tip preferably has a tip radius of from 100 to 300 angstroms. Referring now to Fig. 4 the tip radius is determined by first drawing a line 60 bisecting the coated blade 13 in half. Where line 60 bisects coated blade 13 a first point 65 is drawn. A second line 61 is drawn perpendicular to line 60 at a distance of 75 angstroms from point 65. Where line 61 bisects coated blade 13 two additional points 66 and 67 are drawn. A circle 62 is then constructed from points 65, 66 and 67. The radius of circle 62 is the tip radius for coated blade 13.

Referring now to Figs. 1-3, the coated blade 13 has a thickness 55 of between 0.8 and 1.5 micrometers measured at a distance 54 of 1 micrometer from the blade tip 12.

Preferably, the coated blade 13 has a thickness 57 of between 1.1 and 1.7 micrometers measured at a distance 56 of 2 micrometers from the blade tip 12. Preferably, the coated blade 13 has a thickness 59 of between 1.6 and 2.1 micrometers measured at a distance 58 of 4 micrometers from the blade tip 12. Preferably, the coated blade 13 has a thickness 51 of between 0.38 and 0.67 micrometers measured at a distance 50 of 0.25 micrometers from the blade tip12. Preferably, the coated blade 13 has a thickness 53 of between 0.55 and 0.95 micrometers measured at a distance 52 of 0.5 micrometers from the blade tip 12.

Preferably, the coated blade 13 maintains a narrow profile further from the blade tip 12. The coated blade 13 preferably, has a thickness of between 2.66 and 3.16 micrometers measured at a distance of 8 micrometers from the blade tip 12. The coated blade 13 preferably has a thickness of between 4.06 and 5.06 micrometers measured at a distance of 16 micrometers from the blade tip 12.

The thicknesses provide a framework for improved shaving. The thicknesses provide a balance between edge strength and low cutting force or sharpness. A blade having smaller thicknesses will have lower strength possibly leading to ultimate edge failure if the strength is too low. A blade having greater thicknesses will have a higher cutting force leading to an increased tug and pull and increased discomfort for the user during shaving.

One substrate 11 material which may facilitate producing an appropriately sharpened edge is a martensitic stainless steel with smaller more finely distributed carbides, but with similar overall carbon weight percent. A fine carbide substrate provides for a harder and more brittle after-hardening substrates, and enables the making of a thinner, stronger edge. An example of such a substrate material is a martensitic stainless steel with a finer average carbide size with a carbide density of 200, 300, 400 carbides per 100 square micrometers, to 600, 800, 1000 carbides or more per 100 square micrometers as determined by optical microscopic cross-section.

Razor blade 10 is made generally according to the processes described in the above referenced patents. A particular embodiment includes a niobium adhesive layer

34, DLC hard coating layer 36, chromium overcoat layer 38, and Krytox LW 2120polytetrafluoroethylene lubricious material 40. Chromium overcoat layer 38 is deposited to a minimum of 100 angstroms and a maximum of 500 angstroms. It is deposited by sputtering using a DC bias (more negative than -50 volts and preferably more negative than -200 volts) and pressure of about 2 millitorr argon.

The blade tip radius and facet profile of the present invention provides an improvement in blade sharpness, safety, and shaving comfort. The razor blade 10 addresses the problems of balancing the desire for low cutting force, increased safety, and increased comfort. The blade tip has a large forward profile near the tip while maintaining a narrow profile away from the blade tip. The large forward profile near the tip in conjunction with the narrow blade profile away from the tip provides a low cutting force blade edge that has lower propensity to engage the skin allowing the skin to glide over the edge without nicking, cutting or scraping. The small tip radius maintains efficiency, the wide forward profile increases safety and comfort and the narrow profile away from the tip reduces pulling on the hair. Such a blade reduces irritation and increases comfort.

The dimensions and values disclosed herein are not to be understood as being strictly limited to the exact numerical values recited. Instead, unless otherwise specified, each such dimension is intended to mean both the recited value and a functionally equivalent range surrounding that value. For example, a dimension disclosed as "40 mm" is intended to mean "about 40 mm."

The citation of any document is not to be construed as an admission that it is prior art with respect to the present invention. To the extent that any meaning or definition of a term in this document conflicts with any meaning or definition of the same term in a document cited herein, the meaning or definition assigned to that term in this document shall govern.

While particular embodiments of the present invention have been illustrated and described, the scope of the claims should not be limited by the preferred embodiments set forth in the drawings, but should be given the broadest interpretation consistent with the description as a whole.

CLAIMS

WHAT IS CLAIMED IS:

1. A razor blade characterized by:

a substrate with a coating joined to said substrate defining a coated blade, said coated blade comprising a cutting edge being defined by a blade tip having a tip radius of from 50 to 350 angstroms, said coated blade comprising a pair of first facets extending from said blade tip and a pair of second facets extending from said respective first facets, said coated blade comprising a facet angle from 90° to 135°, a facet width from 0.38 micrometers to 0.65 micrometers a wedge angle from 5° to 30°, said coated blade having a thickness of between 0.8 and 1.5 micrometers measured at a distance of 1 micrometer from the blade tip.

2. The razor blade of claim 1, wherein the substrate is a martensitic stainless steel having a carbide density of 200 to 1000 carbides per 100 square micrometers as determined by optical microscopic cross-section.

3. The razor blade of claim 1, wherein said coated blade has a thickness of between 0.38 and 0.67 micrometers measured at a distance of 0.25 micrometers from the blade tip.

4. The razor blade of claim 1, wherein said coated blade has a thickness of between 0.55 and 0.95 micrometers measured at a distance of 0.5 micrometers from the blade tip.

5. The razor blade of claim 1, wherein said coated blade has a thickness of between 1.1 and 1.7 micrometers measured at a distance of 2 micrometers from the blade tip.

6. The razor blade of claim 1, wherein said coated blade has a thickness of between 1.6 and 2.1 micrometers measured at a distance of 4 micrometers from the blade tip.

7. The razor blade of claim 1 wherein said coating comprises an adhesive layer joined to said substrate.

8. The razor blade of claim 7 wherein said adhesive layer comprises niobium.

9. The razor blade of claim 7, wherein said coating comprises a hard coating layer joined to said adhesive layer.

10. The razor blade of claim 9 wherein said hard coating layer comprises a carbon containing material.

11. The razor blade of claim 9 wherein said coating comprises an overcoat layer joined to said hard coating layer.

12. The razor blade of claim 11 wherein said overcoat layer comprises chromium.

13. The razor blade of claim 11 wherein a lubricious material is joined to said overcoat layer.

14. The razor blade of claim 13 wherein said lubricious material comprises a polymer.

15. The razor blade of claim 13 wherein said lubricious material comprises polytetrafluoroethylene.

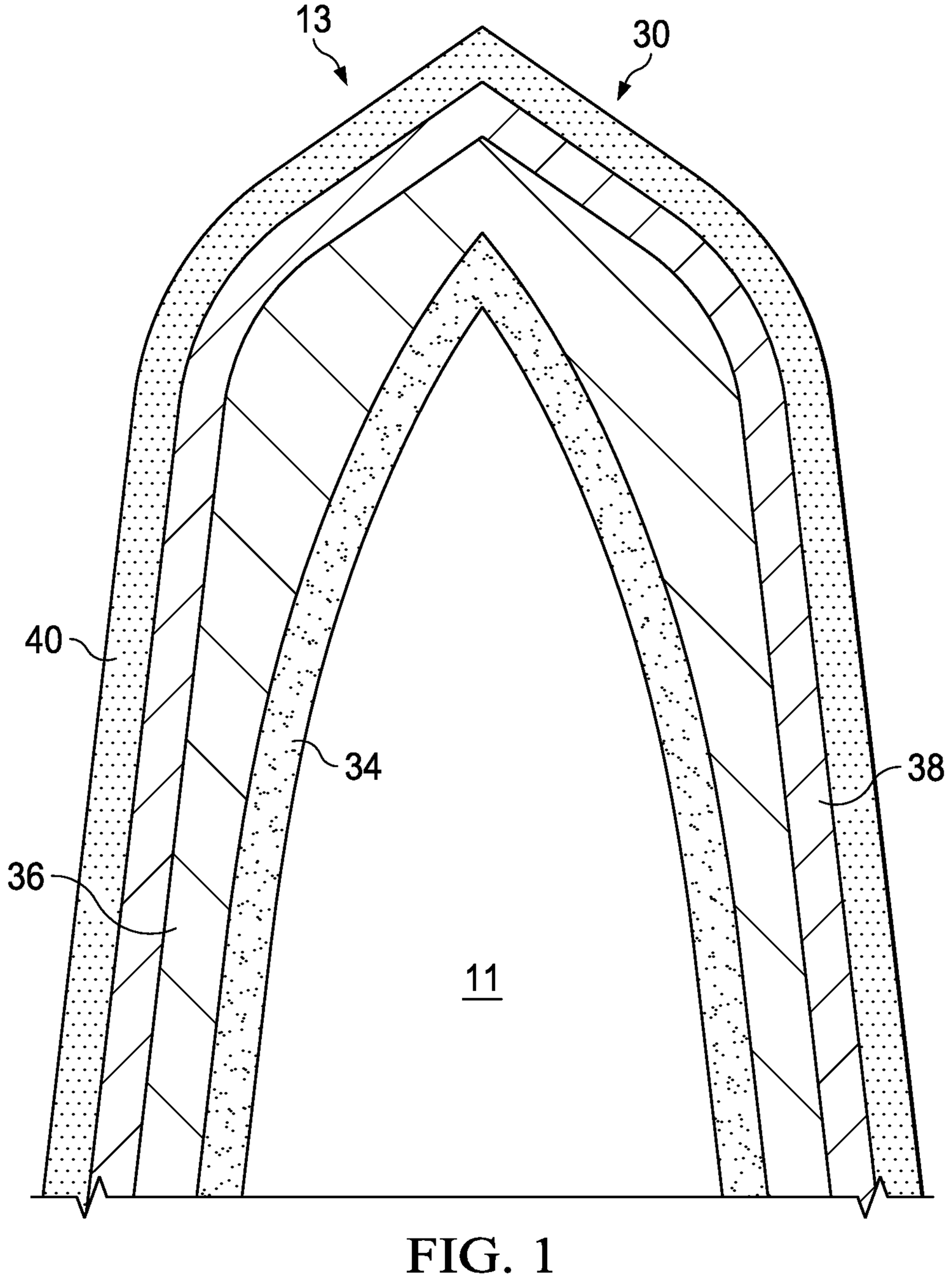

FIG. 1

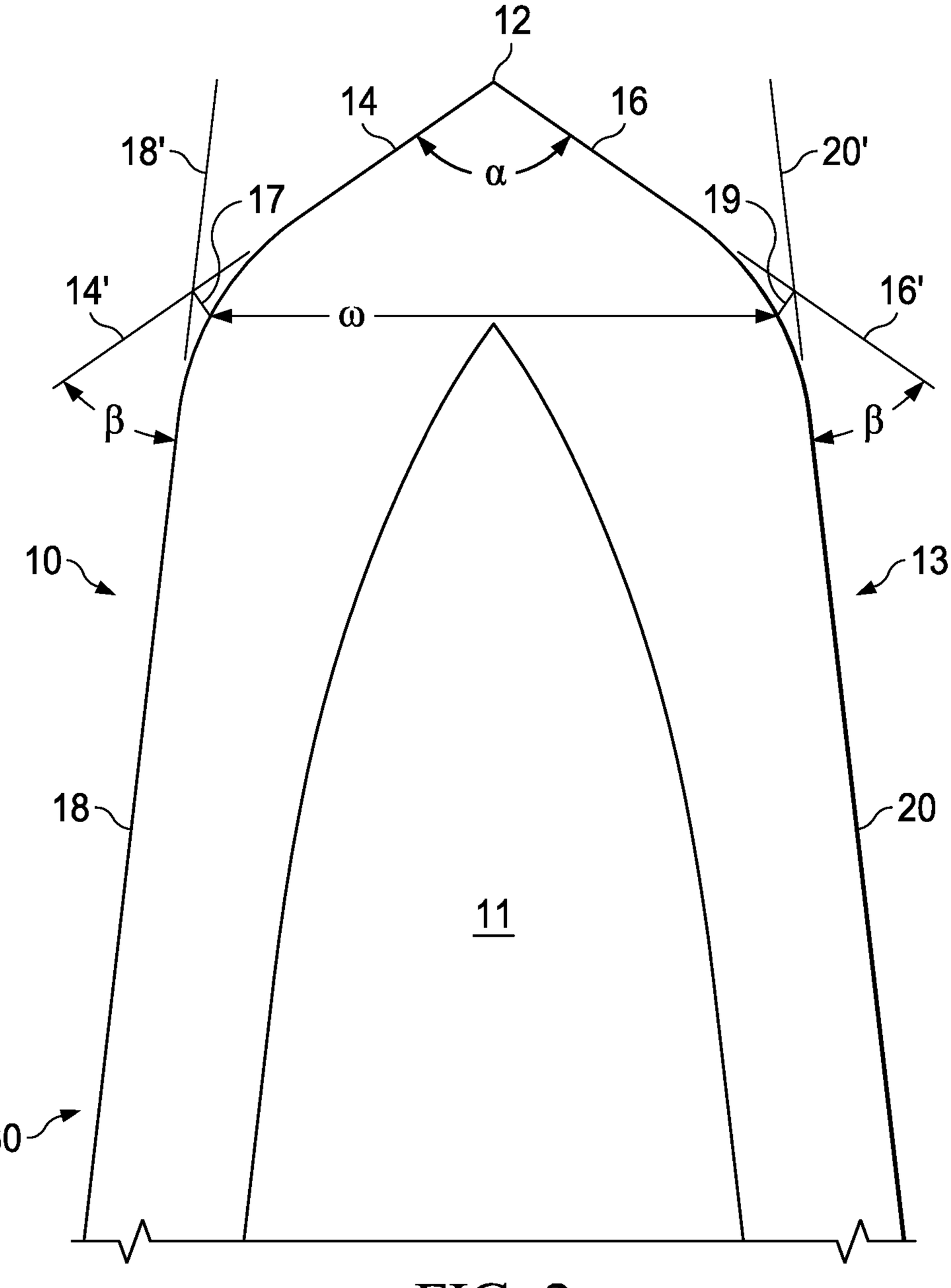

FIG. 2

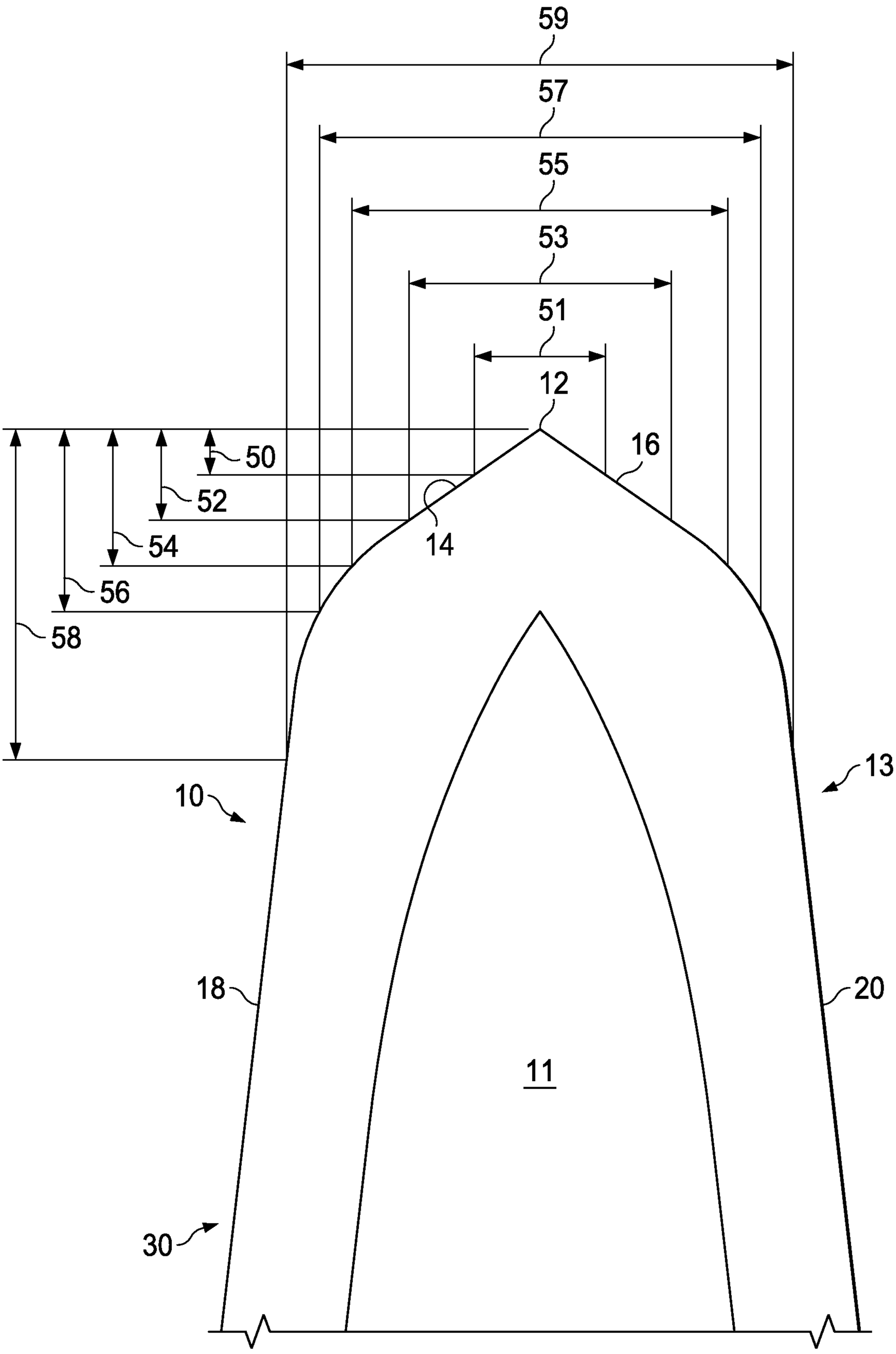

FIG. 3

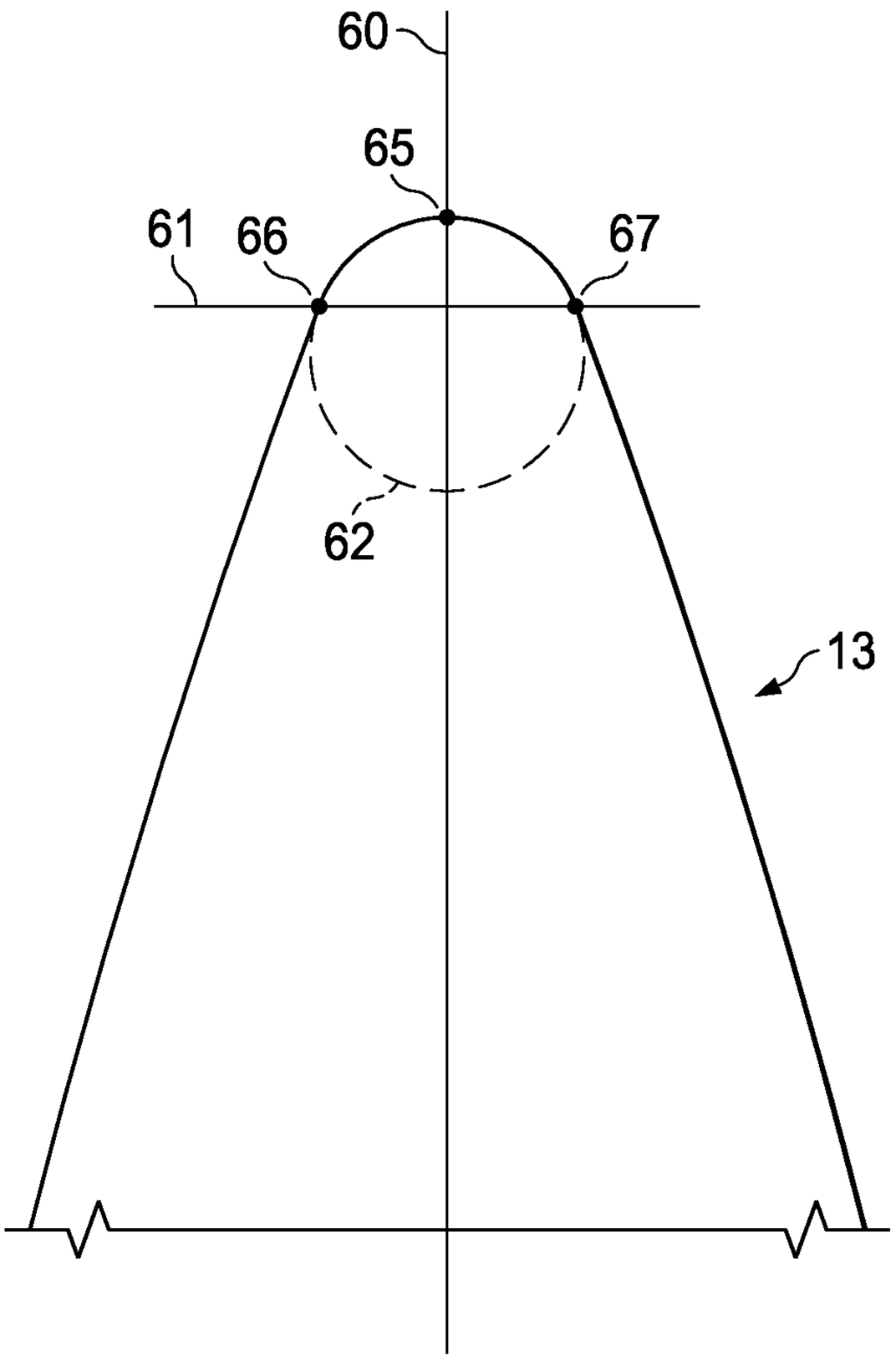

FIG. 4

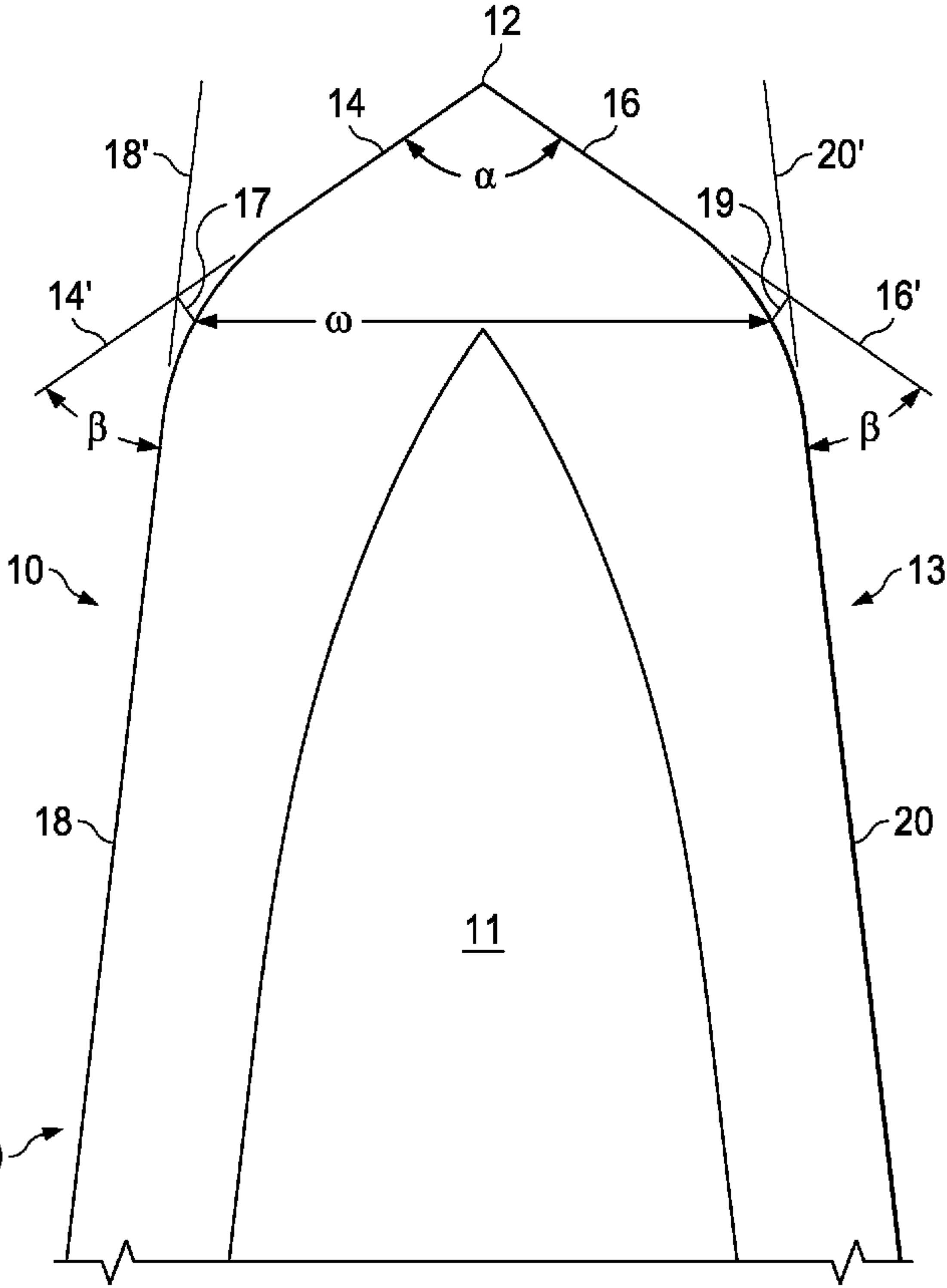
12
14
16
18'
20'
α
17
19
14'
16'
ω
β
β
10
13
18
20
11
30