Office de la Propriété Intellectuelle du Canada
Un organisme d'Industrie Canada

Canadian Intellectual Property Office
An agency of Industry Canada

CA 2491920 C 2009/11/03

(11)(21) 2 491 920

(12) BREVET CANADIEN
CANADIAN PATENT

(13) C

(86) Date de dépôt PCT/PCT Filing Date: 2003/06/23
(87) Date publication PCT/PCT Publication Date: 2004/01/15
(45) Date de délivrance/Issue Date: 2009/11/03
(85) Entrée phase nationale/National Entry: 2005/01/05
(86) N° demande PCT/PCT Application No.: EP 2003/006583
(87) N° publication PCT/PCT Publication No.: 2004/005666
(30) Priorité/Priority: 2002/07/09 (US10/191,619)

(51) Cl.Int./Int.Cl. *E21B 19/22* (2006.01),
E21B 15/00 (2006.01)

(72) Inventeurs/Inventors:
POLSKY, YAROM, US;
SHAMPINE, ROD, US;
MCCAFFERTY, TERRY, US

(73) Propriétaire/Owner:
SCHLUMBERGER CANADA LIMITED, CA

(74) Agent: SMART & BIGGAR

(54) Titre : STRUCTURE DE LEVAGE POUR TUBES DE PRODUCTION CONCENTRIQUES
(54) Title: JACKING FRAME FOR COILED TUBING OPERATIONS

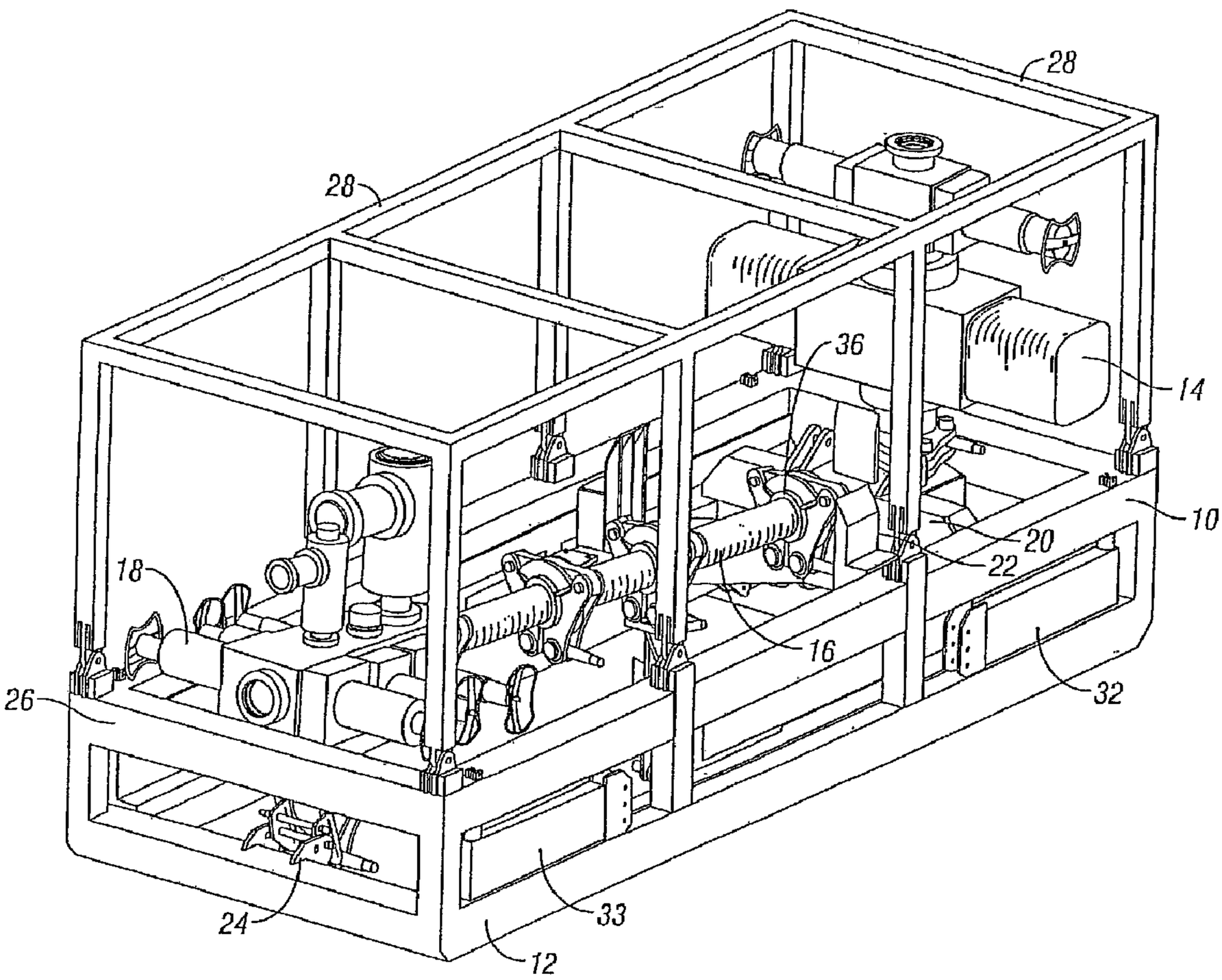

(57) Abrégé/Abstract:
A modular system for performing work on a rig or platform comprises a jacking frame for movement perpendicular to the wellbore and for supporting coiled tubing loads.

(12) INTERNATIONAL APPLICATION PUBLISHED UNDER THE PATENT COOPERATION TREATY (PCT)

(19) World Intellectual Property Organization
International Bureau

(43) International Publication Date
15 January 2004 (15.01.2004)

PCT

(10) International Publication Number
WO 2004/005666 A1

(51) International Patent Classification[7]: E21B 19/22, 15/00

(21) International Application Number: PCT/EP2003/006583

(22) International Filing Date: 23 June 2003 (23.06.2003)

(25) Filing Language: English

(26) Publication Language: English

(30) Priority Data:
10/191,619 9 July 2002 (09.07.2002) US

(71) Applicant *(for CA only)*: **SCHLUMBERGER CANADA LIMITED** [CA/CA]; 525 - 3rd Avenue S.W., Calgary, Alberta T2P 0G4 (CA).

(71) Applicant *(for FR only)*: **SERVICES PETROLIERS SCHLUMBERGER** [FR/FR]; 42 rue Saint Dominique, F-75007 Paris (FR).

(71) Applicant *(for GB, JP, NL only)*: **SCHLUMBERGER HOLDINGS LIMITED** [—/—]; PO Box 71, Craigmuir Chambers, Road Town, Tortola (VG).

(71) Applicant *(for AM, AT, AZ, BY, DE, DK, HR, IT, KG, KR, KZ, MD, NO, NZ, PL, RO, RU, TJ, TM, UA, ZA only)*: **SCHLUMBERGER TECHNOLOGY B.V.** [NL/NL]; Parkstraat 83-89, NL-2514 JG The Hague (NL).

(71) Applicant *(for AE, AG, AL, AU, BA, BB, BE, BF, BG, BJ, BR, BZ, CF, CG, CH, CI, CM, CN, CO, CR, CU, CY, CZ, DM, DZ, EC, EE, ES, FI, GA, GD, GE, GH, GM, GN, GQ, GR, GW, HU, ID, IE, IL, IN, IS, KE, KP, LC, LK, LR, LS, LT, LU, LV, MA, MC, MG, MK, ML, MN, MR, MW, MX, MZ, NE, NI, OM, PG, PH, PT, SC, SD, SE, SG, SI, SK, SL, SN, SZ, TD, TG, TN, TR, TT, TZ, UG, UZ, VC, VN, YU, ZM, ZW only)*: **SOFITECH N.V.** [BE/BE]; Rue de Stalle 140, B-1180 Brussels (BE).

(72) Inventors: **POLSKY, Yarom**; 4406 Morris Drive, Pearland, TX 77584 (US). **SHAMPINE, Rod**; 625 E. 14th Street, Houston, TX 770008 (US). **MCCAFFERTY, Terry**; 3 Beaver Creek Drive, Brookshire, TX 77423 (US).

(74) Agent: **MENES, Catherine**; Etudes et Productions Schlumberger, 1, rue Henri Becquerel, BP 202, F-92142 Clamart (FR).

(81) Designated States *(national)*: AE, AG, AL, AM, AT, AU, AZ, BA, BB, BG, BR, BY, BZ, CA, CH, CN, CO, CR, CU, CZ, DE, DK, DM, DZ, EC, EE, ES, FI, GB, GD, GE, GH, GM, HR, HU, ID, IL, IN, IS, JP, KE, KG, KP, KR, KZ, LC,

[Continued on next page]

(54) Title: JACKING FRAME FOR COILED TUBING OPERATIONS

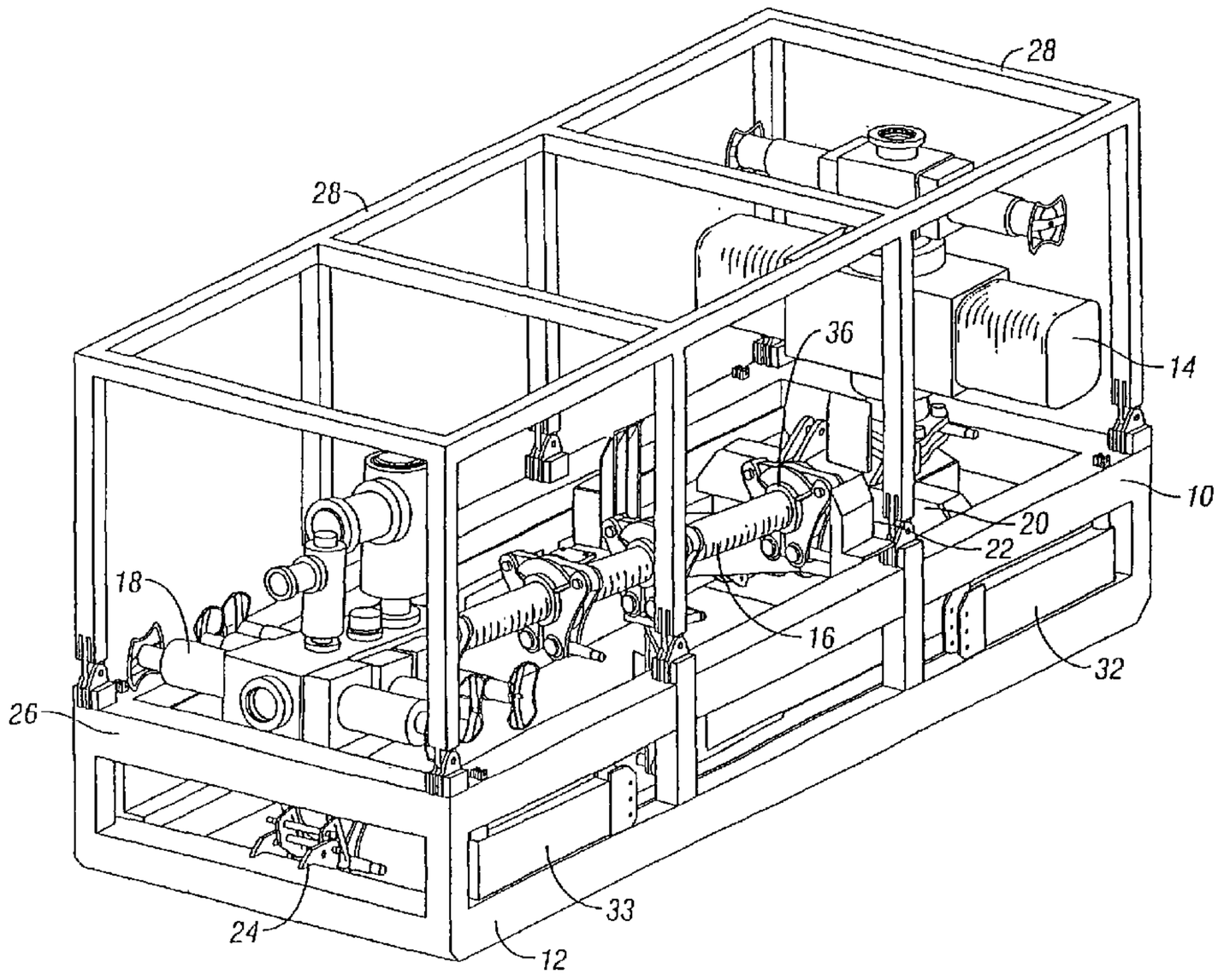

(57) Abstract: A modular system for performing work on a rig or platform comprises a jacking frame for movement perpendicular to the wellbore and for supporting coiled tubing loads.

WO 2004/005666 A1

WO 2004/005666 A1

LK, LR, LS, LT, LU, LV, MA, MD, MG, MK, MN, MW, MX, MZ, NI, NO, NZ, OM, PG, PH, PL, PT, RO, RU, SC, SD, SE, SG, SK, SL, TJ, TM, TN, TR, TT, TZ, UA, UG, UZ, VC, VN, YU, ZA, ZM, ZW.

(84) Designated States *(regional)*: ARIPO patent (GH, GM, KE, LS, MW, MZ, SD, SL, SZ, TZ, UG, ZM, ZW), Eurasian patent (AM, AZ, BY, KG, KZ, MD, RU, TJ, TM), European patent (AT, BE, BG, CH, CY, CZ, DE, DK, EE, ES, FI, FR, GB, GR, HU, IE, IT, LU, MC, NL, PT, RO, SE, SI, SK, TR), OAPI patent (BF, BJ, CF, CG, CI, CM, GA, GN, GQ, GW, ML, MR, NE, SN, TD, TG).

Published:

— *with international search report*

— *before the expiration of the time limit for amending the claims and to be republished in the event of receipt of amendments*

For two-letter codes and other abbreviations, refer to the "Guidance Notes on Codes and Abbreviations" appearing at the beginning of each regular issue of the PCT Gazette.

Jacking Frame for Coiled Tubing Operations

BACKGROUND OF THE INVENTION

[0001] Field of the Invention. The subject invention is generally related to modular systems for work functions on a drilling or production rig or platform and is specifically directed to the composition, operation, and performance of a skid based modular system for coiled tubing and similar operations.

[0002] Discussion of the Prior Art. Various operations are routinely performed on drilling and production platforms. Each of the operations includes subsets of equipment and specific operational functions associated with the equipment. By way of example, a coiled tubing operation includes a plurality of different processes or sequences of actions, some of which can be viewed as general to the service and some of which can be viewed as specific to the particular system used. The general process components include positioning equipment on the platform, assembling the equipment, stabbing tubing, pressure testing well control equipment and similar functions incorporated regardless of the specific equipment used. Specific functions are dictated by the particular equipment and system being utilized.

[0003] The deployment of coiled tubing pressure control and conveyance equipment in offshore environments is a time consuming process made complicated by spatial constraints, crane lifting limitations, safety considerations and intensive assembly on location. The majority of coiled tubing systems utilized offshore to date incorporate virtually no pre-assembly of system components making the Rig Up process extremely inefficient. This is particularly true for systems utilizing the multiple pressure control components required to perform high pressure work.

[0004] A constant in all systems is the requirement that the various components of the system be moved into place, assembled and tested prior to initiation of the operation. In the industry, this is

CONFIRMATION COPY

generally referred to as "Rig Up" work. The amount of time and expense involved in Rig Up work is substantial and dramatic increases in profitability of the rig can be achieved with small time savings in repetitive Rig Up operations.

[0005] Very little integration of conveyance and pressure control equipment is currently utilized offshore. Coiled tubing jacking frames are currently used in offshore environments to support and manipulate coiled tubing conveyance equipment. The typical CT jacking frame consists of a four-post support system containing a one or two-dimensional in-plane translation type table into which the injector is inserted. The injector support can also be raised or lowered. One type of system also possesses a rotation table for aligning the injector gooseneck with the reel. Due to spatial transport restriction, the injector and jacking frame are transported separately onto the platform. Pressure control equipment including BOPs, riser sections and strippers are separately lifted into appropriate positions in the well stack. In the prior art systems, a minimum of seven components must be separately installed on location.

[0006] The principle hindrance in the Rig Up of existing coiled tubing systems is the need to assemble virtually every component in the system on location. This fragmentation of the operation results in numerous crane lifts to move equipment components into position and numerous assembly steps to couple these components together.

[0007] A major drawback to pre-rigging or assembly prior to Rig Up is the sheer size of the equipment being utilized.

In order to achieve maximum benefit by pre-assembly the equipment must fit reasonable transportation dimensions.

[0008] To date, there are not any available systems that permit comprehensive pre-rigging at an offsite location. It is desirable that such a system be developed for increasing safety by eliminating repeated make-up and break-down of critical assemblies, and by permitting increased efficiency in installing such systems for operation. It is also desirable that such a system be developed to permit transport to and from a rig in standard transport systems and containers in its assembled state.

SUMMARY OF THE INVENTION

According to the present invention, there is provided an apparatus for treating a well on an offshore platform, comprising a mechanism for providing rotational movement of wellhead components to or away from a wellbore, a jacking frame, and a support frame, wherein the jacking frame allows perpendicular movement relative to the well and further comprises a single column-type design, and wherein the support frame supports the jacking frame in a rotated position whereby the jacking frame occupies an envelope suitable for transport by standard support means.

[0009] Embodiments of the invention are directed to a modular, pre-assembled system for rig workovers, and a preferred embodiment is a modular, pre-assembled system specifically designed for coiled tubing operations. The system of some embodiments of the invention results in improved equipment utilization and in significant improvements in time, personnel and safety issues. Some embodiments of the system may also improve safety and the working environment by minimizing Rig Up time through the

ability to pre-assemble many critical safety components off rig and in a controlled factory environment.

[0010] One important aspect of some embodiments of the invention is that the use of pre-assembled modular components decreases or reduces use of the rig crane, which is typically a bottleneck in offshore work. By permitting a plurality of pre-assembled components to be transported into and out of operational position, the time required by the rig crane is substantially reduced.

[0011] Some embodiments of the invention are directed to a modular work system permitting Rig Up time to be substantially reduced by reducing the number of crane lifts and number of personnel required to offload equipment from a transport boat or other transport vehicle. This is achieved by developing transport skids capable of holding multiple system components. Some embodiments of the invention are also directed to reducing the number of crane lifts required to position equipment on the platform. One objective of some embodiments of the present invention is to reduce the number of equipment components that must be mechanically coupled on location by pre-assembling the components and maintaining the assembly in operating condition during storage and transport. This pre-assembly also applies to hydraulic and other control lines. An additional advantage of the system of some embodiments of the invention is the reduction of personnel time and numbers required to support the operation on the rig.

[0012] In some embodiments of the invention, skid design concepts are employed, wherein a skid system carries various pre-assembled components for transport, storage and operation. Specifically, a skid sub-system includes various

related components. The components are either pre-assembled or are designed to complete a sub-assembly through final assembly on the rig. The skid is moved into place using the crane, and the assembly is completed. Additional sub-systems are mounted on additional skids which are designed to be mated with other related skids and sub-assemblies.

[0013] It is an important aspect of some embodiments of the invention that each skid sub-system fit within specific size or space constraints in order to meet transportation regulations for vehicle width and height. By way of example, standard offshore containers have widths of 2.5m and height of 2.8m. Skid height may also be a function of the trailer deck height. For example, Norwegian transport laws stipulate that a truck cannot be more than 4.0m in height. Obviously, a "low-boy" trailer with a deck height of 0.5m will permit a taller or higher skid height than a standard trailer with a deck height of 1.0m. Skid length is also dictated by useful trailer length, which is typically, about 6.0m. Weight is also a factor, both for transportation and crane lifting functions. Each skid is preferably designed to incorporate the maximum amount of equipment required for a particular job, while remaining within the various size and weight limits imposed on the transport of such equipment.

[0014] A preferred embodiment of the invention is directed to a coiled tubing operating system and comprises nine pre-assembled skid components, namely, the control cabin, power pack, reel, power stand, jacking frame, blowout preventer (BOP) transport frame, BOP accumulator/control skid, shaker tank and workshop container. Efficient rig-up is accomplished by having the riser and triple BOP components travel assembled and by having the tubing

injector travel assembled to the jacking frame and stripper, preferably with the gooseneck attached. The system is designed to be set up with a minimum of connections between skid units, thereby greatly increasing efficiency, as well as making the various Rig-Up operations safer through the use of factory assembled and tested connections and components.

[0015] In the past, assembly of the well control stack and injector was identified as being one of the most time consuming parts of the Rig-Up process. Some embodiments of the invention for the jacking frame travels with the injector and stripper assembled and the gooseneck attached, but folded to meet envelope requirements, with an objective of significantly reducing setup time associated with these components. The BOP transport skid is designed to mechanically interface with the jacking frame and skid, eliminating the need to rely on the orientation of the frame to the deck to assure coupling accuracy. That is, the BOP skid forms a support base for the jacking frame. Both components are designed to permit proper mating and interconnectivity. This assures efficient and accurate connections.

[0016] In some embodiments of the invention, the injector is supported on a platform with a skid-plate that allows rotation about the vertical axis. The injector platform is attached to single columnar support adapted for vertical translation. The base of the support travels on a rail system to permit horizontal motion and placement. The rail system preferably moves substantially radially from the wellbore.

[0017] In those cases where the overall height exceeds transportation requirements, each assembly is designed to travel on it's side and may be pivoted into operating position during Rig Up.

[0018] In some embodiments of the invention, the jacking system provides four axis motion of the injector. The system can raise and lower the injector to provide a work window between the stripper and BOP. The jacking frame may further allow transfer of all operation induced vertical load to the wellhead. The jacking system will provide the required motion while supporting the injector, stripper and gooseneck. The jacking system includes work decks and handrails for access to the service areas of the injector. The system is designed for quick and simple deployment. Ladders may be included in the integral system.

[0019] The jacking system or jacking frame of some embodiments of the present invention incorporates or includes a number of features which allow safer, more efficient Rig-Up operations. In a preferred embodiment, the jacking frame, by using a single, movable columnar support, allows greater access to the BOP and the well, as opposed to prior art "4-post" designs. In addition, the jacking frame allows the injector, gooseneck and related equipment to be quickly and easily moved, thereby allowing access, for instance, crane access, to the well. For instance, the jacking frame may attach to the BOP, the stripper and/or other well control components and move them off the well center, thereby allowing direct crane access to the well bore. The jacking frame may carry some or all of the BOP stack, as may be required for a particular operation. This is particularly useful where certain hangoffs are desired. In addition, the jacking frame may interface with a rail

system to allow movement of the frame radially in relation to the wellbore, and therefore be used to carry the BOP stack off the wellhead.

[0020] Another beneficial feature of the jacking frame of some embodiments of the present invention is that it may be moved vertically, horizontally in a short-stroke manner, horizontally in a long-stroke manner or it may provide rotational movement for certain well control components. Vertical movement of the jacking frame allows it to move the well control stack or individual components thereof, vertically on or off the wellhead, without necessitating the use of a crane. Vertical movement is preferably provided by a power screw, but any suitable mechanism or method may be used. Short-stroke horizontal movement of the jacking frame may be achieved using any suitable mechanism, but is preferably accomplished through the use of side shift cylinders. This allows well control components to be moved a relatively short distance radially off well center. Long-stroke horizontal movement allows relatively significant movement of the well control stack or components thereof, radially off well center. This feature allows greatly increased access to the well bore. Long-stroke horizontal movement is typically achieved using a trolley track system which incorporates a rack drive. However, any suitable mechanism or method may be used. The jacking frame may also provide rotational movement for certain coiled tubing components, such as the injector. Preferably, the injector is attached to a turntable bearing and a worm drive is used to rotate the bearing. In addition, the jacking frame may include a cantilevered platform that moves vertically (in relation to the wellbore) and rides along the jacking frame column(s). Typically, the platform will include the side-

shifting cylinders that allow short-stroke horizontal movement of the well components.

[0021] In some embodiments, the BOP transport skid houses a triple BOP stack, a shear seal or safety head as required, and an additional pipe/slip ram. The transport skid is designed to minimize the required steps for assembling the well control stack. In those cases where a safety-head shear seal ram is required, the ram is designed to be tilted in order to fit through the rig floor opening. In this configuration, the safety head will travel coupled to the pipe/slip ram. In this embodiment, the ram assembly may travel with the rams oriented in the vertical position, so it may be lifted, dropped through the deck, rotated and fastened to the wellhead. The triple BOP, riser and BOP work platform will travel assembled in the horizontal position and will be pivoted into place on the rig. The working platform is also integral and is folded into the skid envelope.

[0022] Crash frames may be provided during transportation and storage.

[0023] Various other skids are supplied as required for the operation, as described above.

BRIEF DESCRIPTION OF THE DRAWINGS

[0024] Fig. 1 is a perspective view of the BOP transport skid in accordance with the teaching of the subject invention.

[0025] Fig. 2 is a reverse perspective view of the BOP transport skid of Fig. 1.

[0026] Fig. 3 is a perspective view of the jacking frame assembly in the horizontal, transport position, in accordance with the teaching of the subject invention.

[0027] Fig. 4 is a reverse perspective view of the jacking frame assembly of Fig. 3.

[0028] Figs. 5a and 5b are left and right views of the jacking frame of Figs. 3 and 4, in the vertical, operational position.

[0029] Fig. 6 is an illustration showing the BOP transport skid being lowered into position on a rig by a rig crane.

[0030] Fig. 7 is an illustration showing the safety head assembly being lifted from the skid of Fig. 6 for lowering into position through a drop floor plate.

[0031] Fig. 8 is an illustration showing the safety head assembly being lowered through the floor of the rig.

[0032] Fig. 9 is an illustration showing the positioning of the BOP transport skid over the drop plate and safety head.

[0033] Fig. 10 is an illustration showing removal of the crash frame from the BOP transport skid.

[0034] Fig. 11 is an illustration showing rotation, unpinning and installation of the BOP and riser.

[0035] Fig. 12 is an illustration showing the BOP and riser in its install position prior to removal of the rig crane.

[0036] Fig. 13 is an illustration showing the deployment of the integral work platform on the BOP and riser skid system.

[0037] Fig. 14 is an illustration showing the positioning of the jacking frame using the rig crane, with the jacking frame assembly in the horizontal, transport position.

[0038] Fig. 15 is an illustration showing the rotation of the jacking frame to the vertical, operating position.

[0039] Fig.16 is an illustration showing placement of the jacking frame in the BOP transport skid using the rig crane.

[0040] Fig. 17 is an illustration showing removal of the jacking frame crash frame.

[0041] Fig. 18 is an illustration showing the deployment of the integral work platform on the jacking frame.

[0042] Fig. 19 is an illustration showing unfolding and raising of the gooseneck and alignment of the gooseneck with the reel (not shown).

[0043] Fig. 20 is an illustration showing the vertical translation of the jacking frame on its column and horizontal translation of the jacking frame on the BOP skid rails to position the jacking frame in operating position on the stack and riser.

[0044] Fig. 21 shows the BOP stack, riser and jacking frame in operating assembly.

DETAILED DESCRIPTION OF THE PREFERRED EMBODIMENT

[0045] A typical BOP transport skid 10 is shown in Figs. 1 and 2. The skid is a sturdy framework having a lower base 12 for supporting nesting safety head components 14, a riser 16 and a triple BOP stack 18. This configuration permits the components of the assembly to fit in an envelope suitable for standard transportation methods. Various support brackets 20, 22 and 24 secure the safety head, riser and BOP stack on the skid. This permits pre-assembly and testing of the safety head and pre-assembly of the riser/BOP at an off rig location. The upper rail 26 of the skid is

adapted for supporting a transport crash frame 28 for protecting the various nested components while in transit and while stored. Four legs 30, 31, 32 and 33 are pivotally mounted on the skid, and as will be explained, provide leveling and stabilizing support for the skid when it is in its operating position. In a typical application, the lower end 36 of the riser 16 is pivotally mounted in bracket 22 so that it may be pivoted to a vertical position prior to disconnecting it from the skid 10. The assembled skid 10 can be transported and stored as a unit. Once positioned at an operating location on the rig, the crash frame 28 is removed, and the safety head 14 is lifted from the skid and dropped into position below deck. The skid 10 is then positioned over the safety head 14 and the riser 16 and BOP 18 are pivoted as a unit, lifted and dropped into position on the safety head. The skid 10 is then stabilized in position to provide a support structure for other components.

[0046] In the preferred embodiments, the additional skid supported components comprise the jacking frame 40 shown in Figs. 3, 4, 5a and 5b. As shown in Figs. 3 and 4, the jacking frame 40 includes a support frame 42. The jacking frame 40 is nested in a support/crash frame 42 in a horizontal position, or on its side. The jacking frame includes a gooseneck 44 which is in a folded, stowed position in Figs. 3 and 4. The work platforms 46 are also in a stowed, folded position. This permits the jacking frame to occupy an envelope suitable for standard transportation methods. In the embodiment shown in Figs. 3, 4, 5a and 5b, the jacking frame 40 is adapted to pivot from the horizontal, transport position of Figs. 3 and 4 to the vertical, operating position of Figs. 5a and 5b. In the preferred embodiment, this is accomplished by pivoting the rig in the frame using hydraulic drivers 48, 49, mounted on the frame and supporting the jacking frame. The lower members 50 of the jacking frame are designed to interconnect to a platform on the BOP skid, as will be shown, for supporting the assembly during operation and moving the equipment into position along the long axis of the BOP skid during Rig Up. This permits the assembly to be accurately placed on a solid support surface without relying on the orientation of the rig floor for each of the various modular components. Once the jacking frame is positioned on the skid the gooseneck 44 is unfolded and aligned with a coil tubing reel, not shown. The work platform 46 is unfolded and secured and the entire assembly is ready for operation and for connection to the various other work components, including the control systems, power systems and control cabin, in typical fashion.

[0047] A diagrammatic illustration of the operation is included in Figs. 6-21. This illustration includes an alternative embodiment of the BOP skid and an alternative embodiment of the jacking

frame. The form, fit and function of this embodiment corresponds with the embodiments of Figs. 1-5b. Like functional components are identified by the same reference numerals.

[0048] As shown in Fig. 6, the BOP skid 10 is positioned near the wellhead drop plate 50 on the rig floor 52 by use of the rig crane 54. The safety head 14 is then uncoupled from the skid and lifted by the crane 54, *see* Fig. 7. The safety head 14 is moved to position over the drop floor and lowered onto the wellhead (not shown) below the rig deck 52, *see* Fig. 8. The skid 10 is then picked up by the crane 54, as shown in Fig. 9, and positioned over the wellhead. Once in position, as shown in Fig. 10, the crash frame 28 is removed, leaving the skid support base and the assembled riser 16 and BOP stack 18. In this configuration, the assembly includes a stowed work platform 19. Once positioned, the riser/BOP assembly 16, 18 is pivoted into position over the wellhead and lowered onto the safety head as shown in Figs. 11 and 12. The work platform is then unfolded and secured, as shown in Fig. 13 and the assembly of the safety head/riser/BOP stack is completed.

[0049] Once the riser system is in place, the operation is ready for installation of the jacking frame 40. The jacking frame 40 is positioned near the assembled BOP skid unit 10 by the crane 54, as shown in Fig. 14. The crash frame 42 is removed, *see* Fig.17. The hydraulic rams 48, 49 then rotate the jacking frame to its vertical, operating position, as shown in Fig. 15. The support rails 50 are then positioned on the trolley rails 51 on the skid, *see* Fig. 16. The work platform 46 is unfolded and assembled as shown in Fig. 18. The gooseneck 44 is unfolded and the injector is aligned with the reel (not shown), *see* Fig. 19. Then, as shown in Fig. 20, the jacking frame 20 is horizontally moved along rails 51 to operating position over the well head and lowered via support column into position on the BOP stack, as shown in Fig. 21. The entire assembly may now be completed and readied for operation.

[0050] This modular approach permits the sub-assemblies to be factory assembled and tested. In a preferred embodiment this would include the safety head assembly, the riser/BOP assembly and the jacking frame. These sub-assemblies may then be transported and assembled as units on the rig floor, greatly reducing Rig Up time while at the same time increasing safety and reducing the amount of manpower required on the rig to complete the operation. While the system is shown in connection with a jacking frame, it is readily adaptable to other rig workover operations.

[0051] While certain features and embodiments of the invention have been shown in detail herein, it should be recognized that the invention includes all modifications and enhancements within the scope of the accompanying claims.

51650-3

CLAIMS:

1. An apparatus for treating a well on an offshore platform, comprising a mechanism for providing rotational movement of wellhead components to or away from a wellbore, a jacking frame, and a support frame, wherein the jacking frame allows perpendicular movement relative to the well and further comprises a single column-type design, and wherein the support frame supports the jacking frame in a rotated position whereby the jacking frame occupies an envelope suitable for transport by standard support means.

2. The apparatus of claim 1, further comprising a mechanism for providing long-stroke perpendicular movement of the jacking frame.

3. The apparatus of claim 2, wherein the mechanism comprises rails.

4. The apparatus of any one of claims 1 to 3, wherein the support frame is a removable crash frame.

5. The apparatus of any one of claims 1 to 4, further including a mechanism for rotating the jacking frame from the rotated position to an operating position while in the support frame.

6. The apparatus of any one of claims 1 to 5, further including a stowable work platform on the jacking frame.

7. The apparatus of claim 6, further including a riser and BOP (Blowout Preventer) assembly having the stowable work platform disposed thereon.

8. The apparatus of any one of claims 1 to 7, further including a mechanism for allowing the jacking frame to support coiled tubing load.

9. The apparatus of any one of claims 1 to 8, further comprising a mechanism for providing vertical movement of the jacking frame.

10. The apparatus of claim 9, wherein the mechanism is a power screw.

11. The apparatus of any one of claims 1 to 10, further comprising a mechanism for providing short-stroke horizontal movement of the jacking frame.

12. The apparatus of claim 11, wherein the mechanism comprises at least one side-shift cylinder.

13. The apparatus of any one of claims 1 to 12, wherein the mechanism for providing rotational movement comprises a turntable bearing and a worm drive.

14. The apparatus of any one of claims 1 to 13, wherein the mechanism for providing rotational movement allows the jacking frame to move a BOP off of a wellhead.

SMART & BIGGAR
OTTAWA, CANADA

PATENT AGENTS

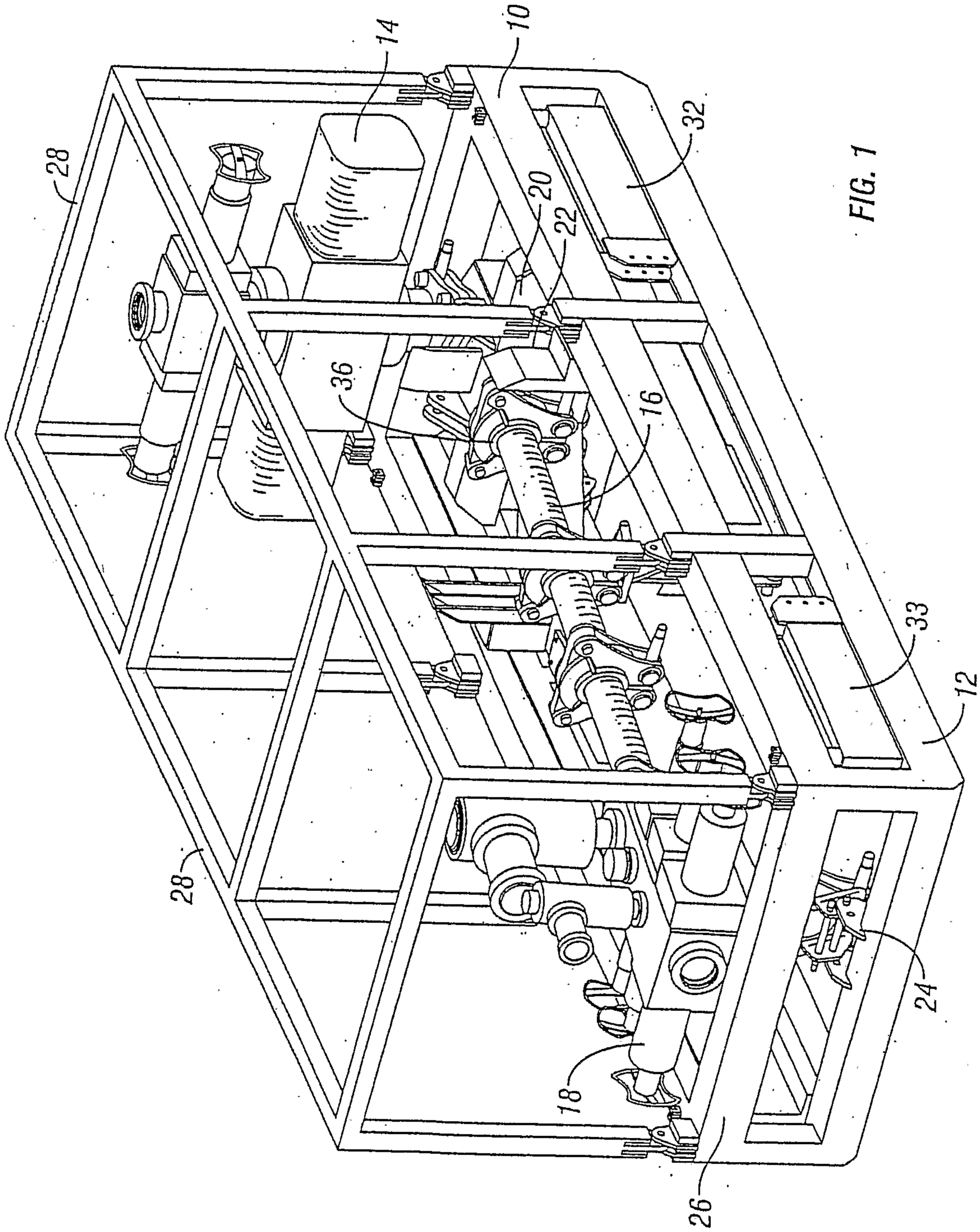

FIG. 1

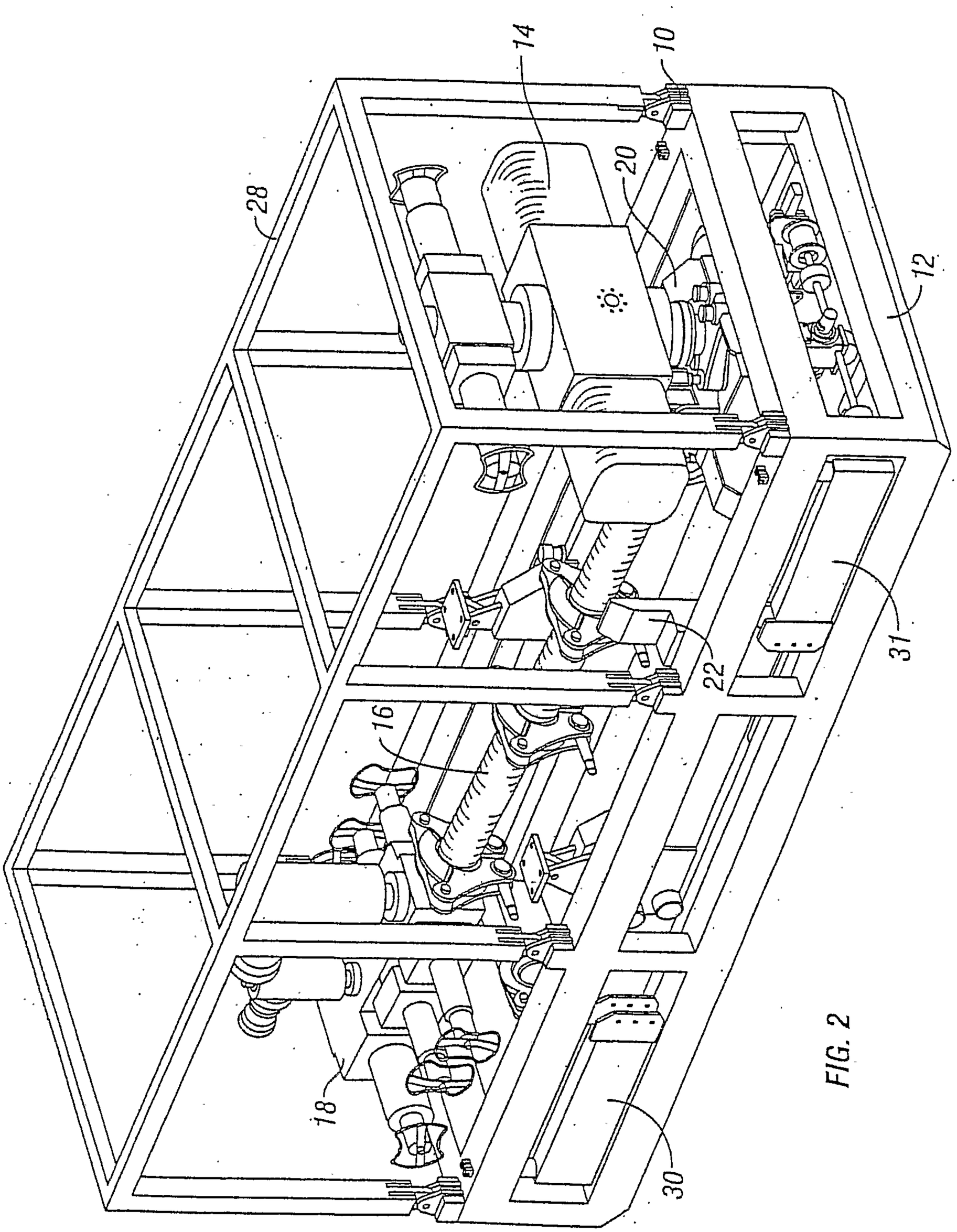

FIG. 2

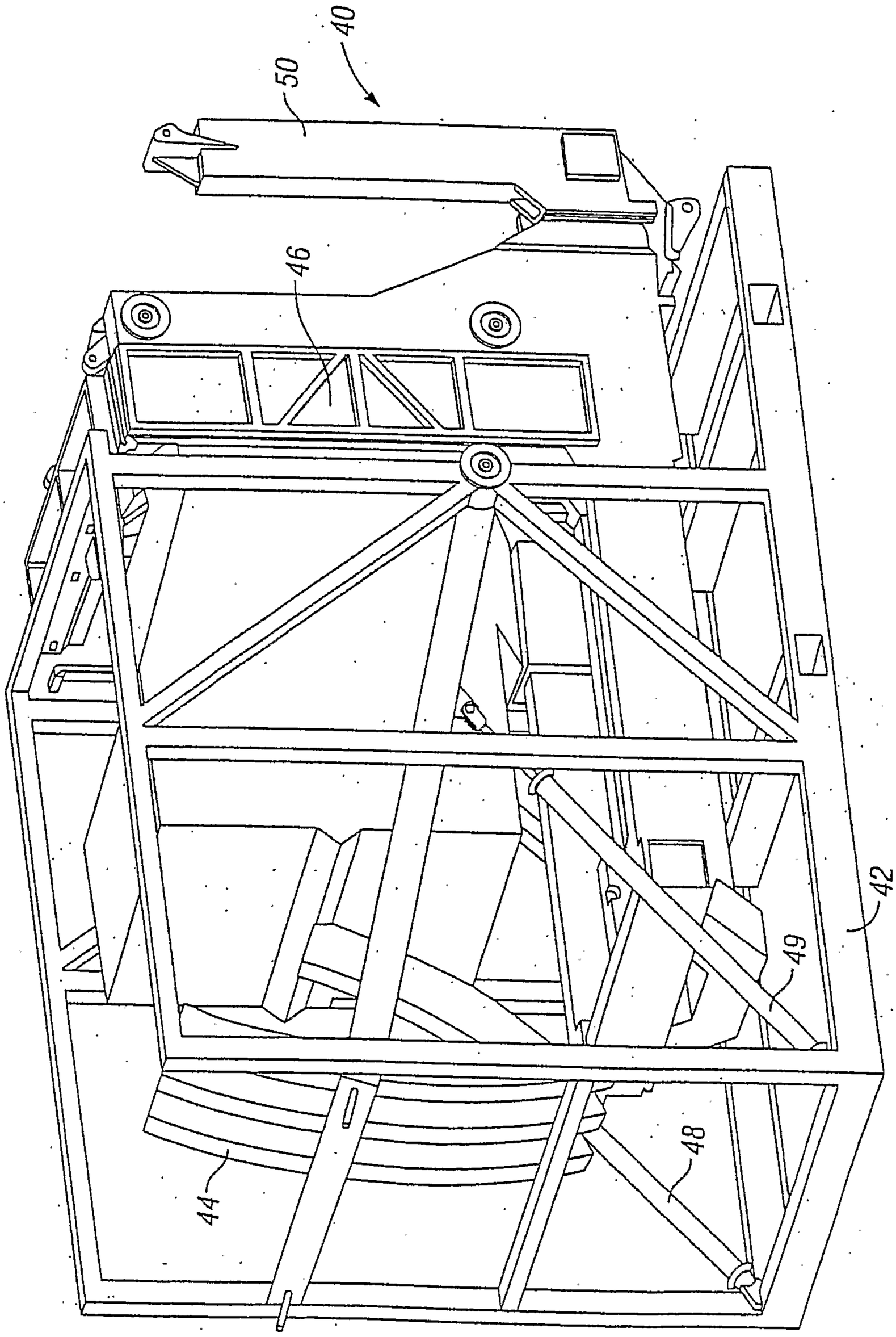

FIG. 3

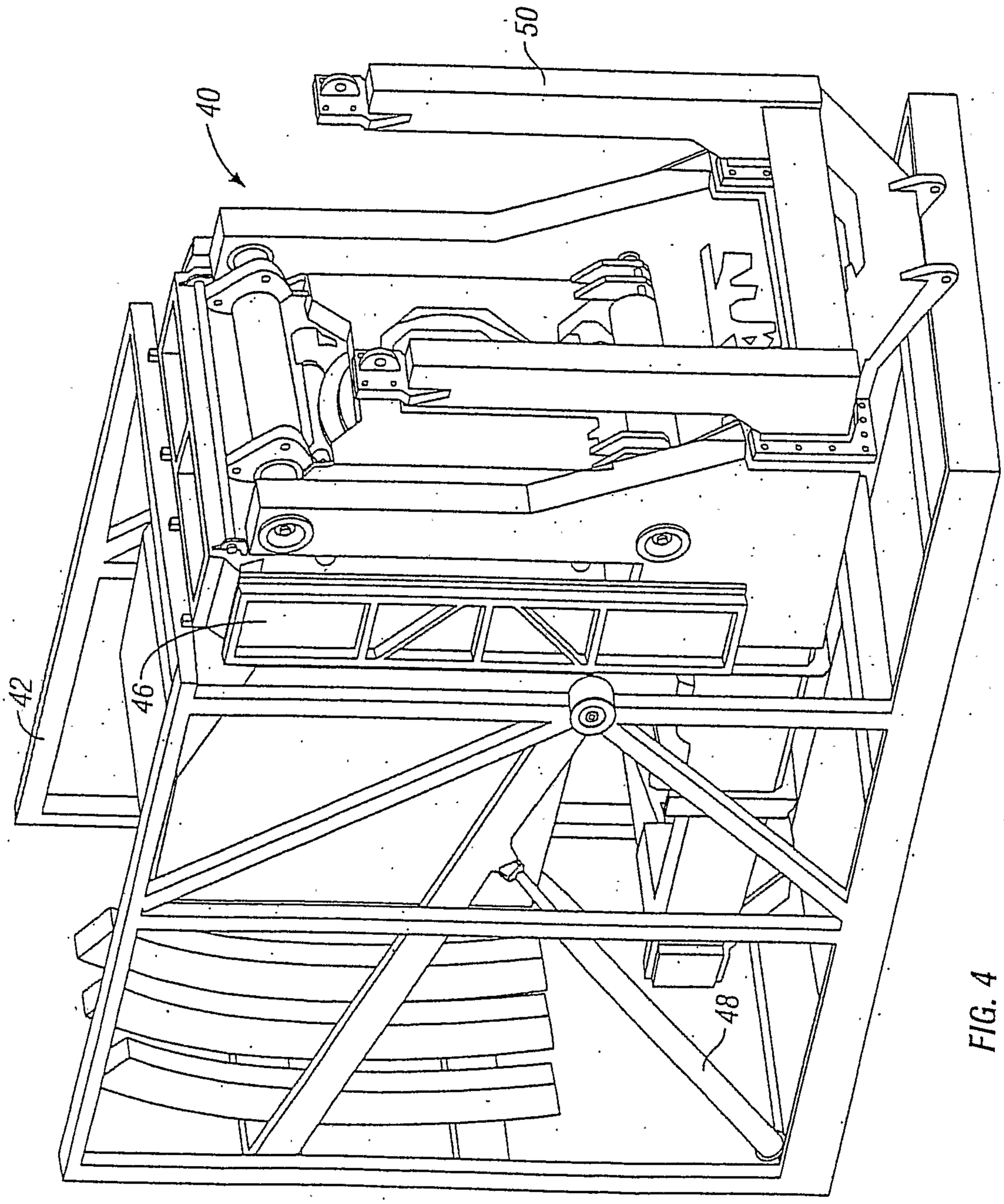

FIG. 4

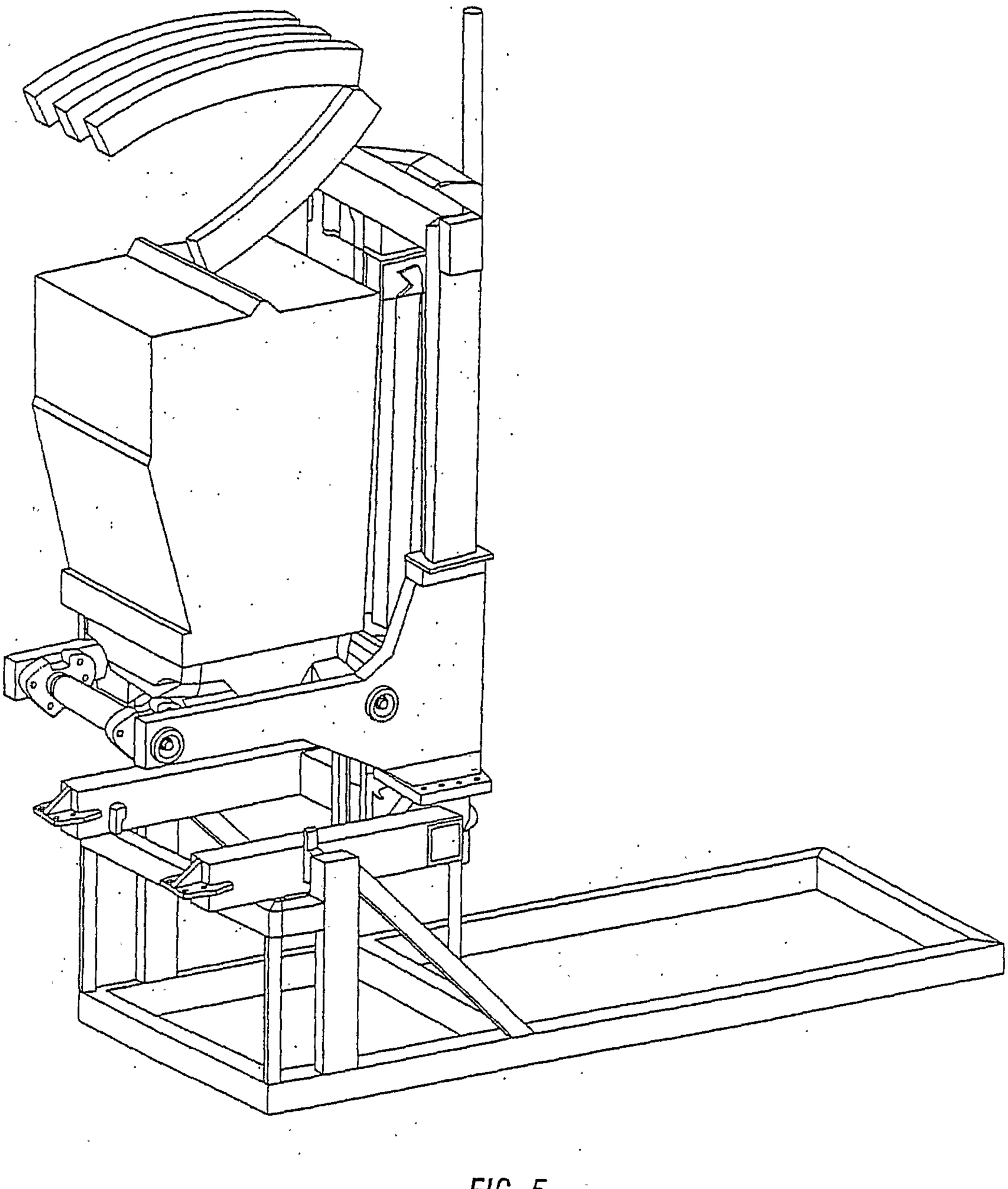

FIG. 5

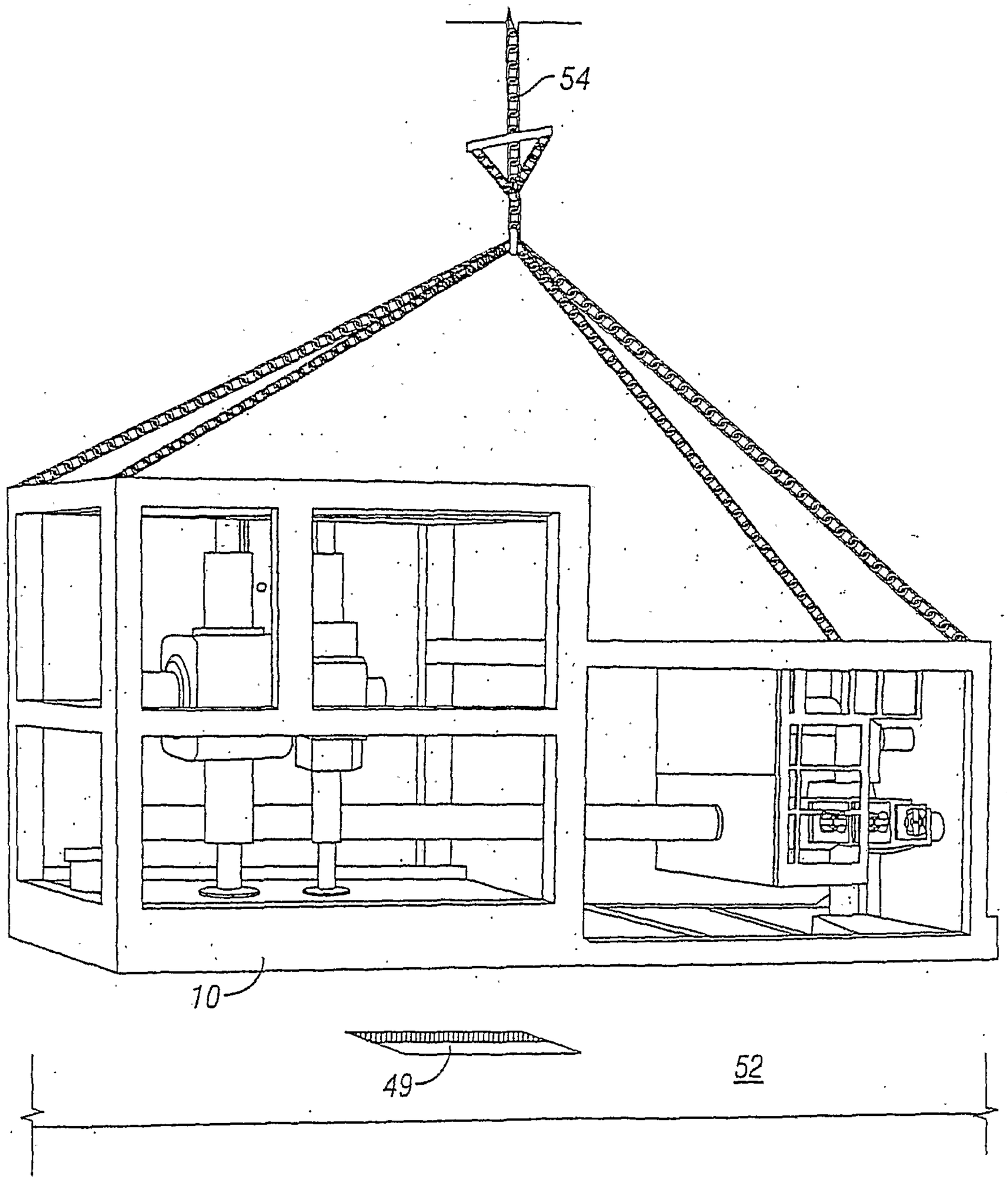

FIG. 6

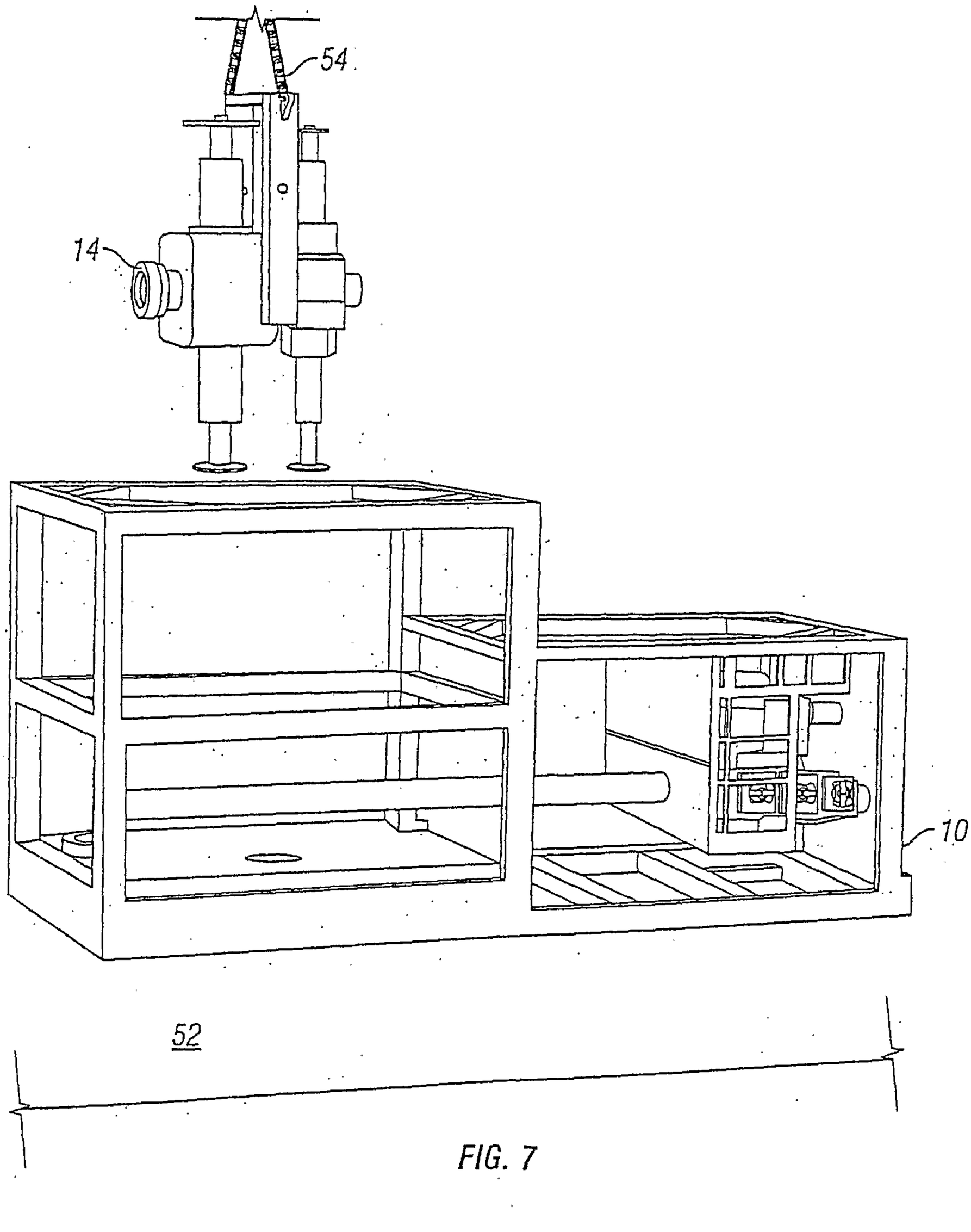

FIG. 7

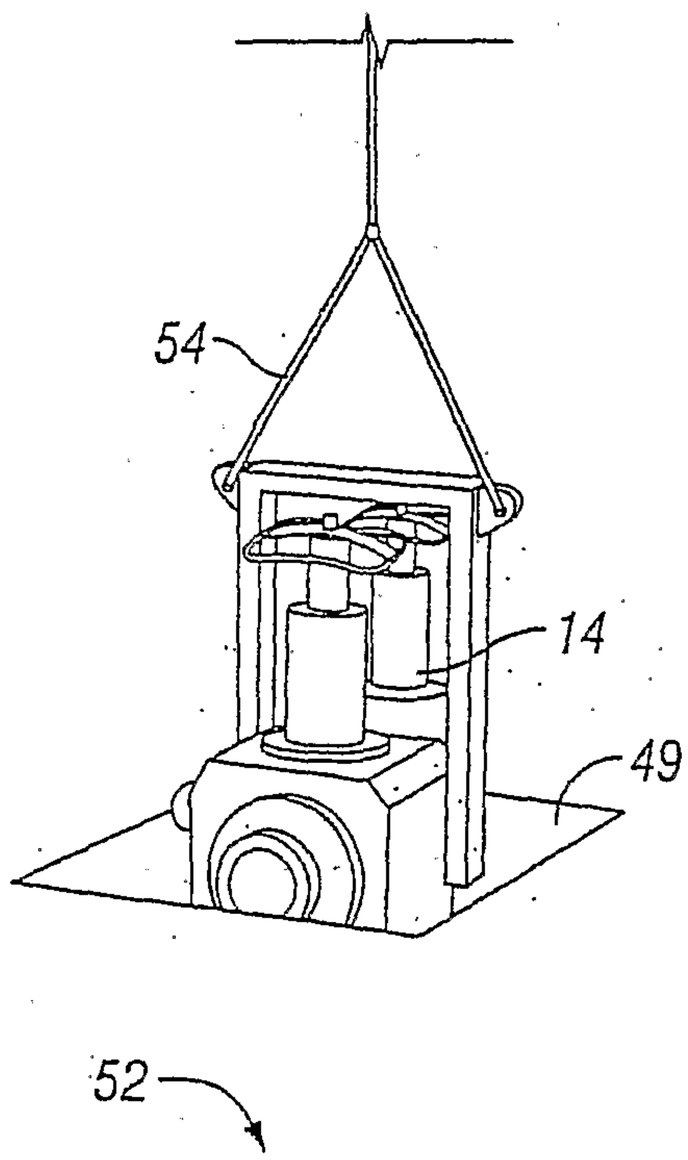

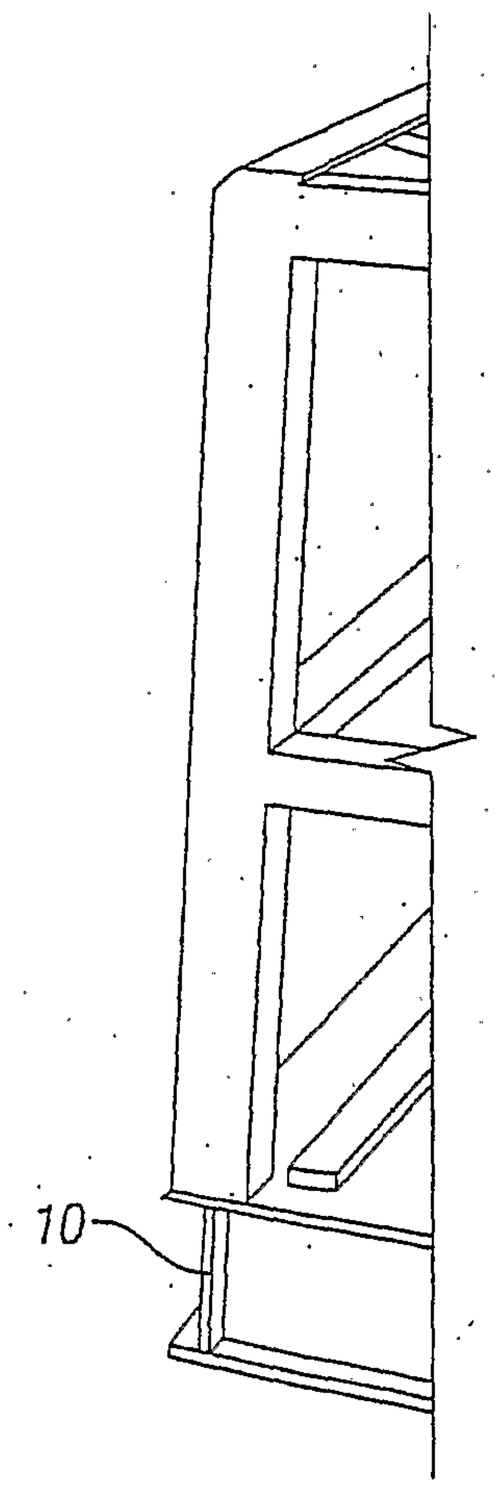

FIG. 8

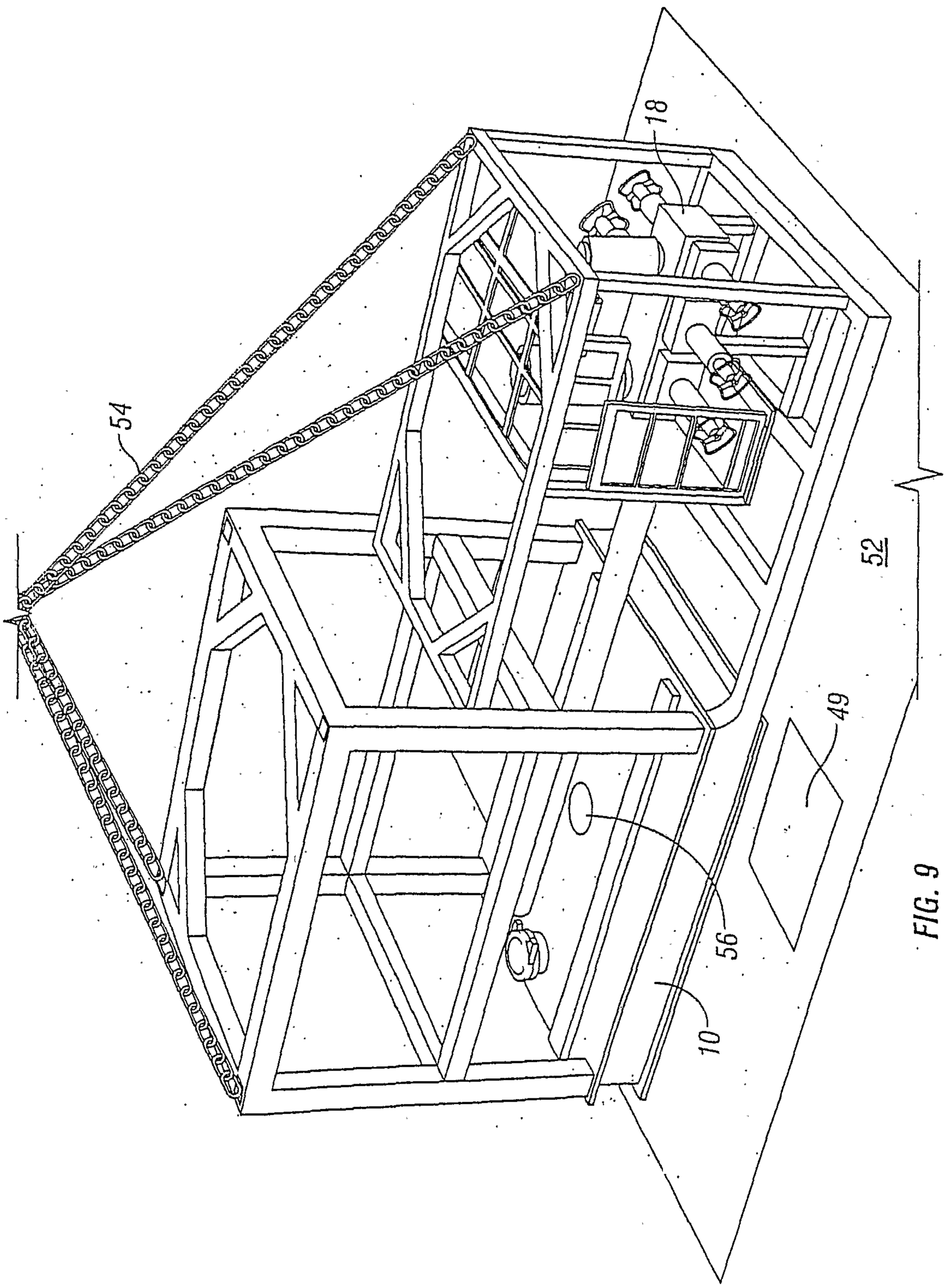

FIG. 9

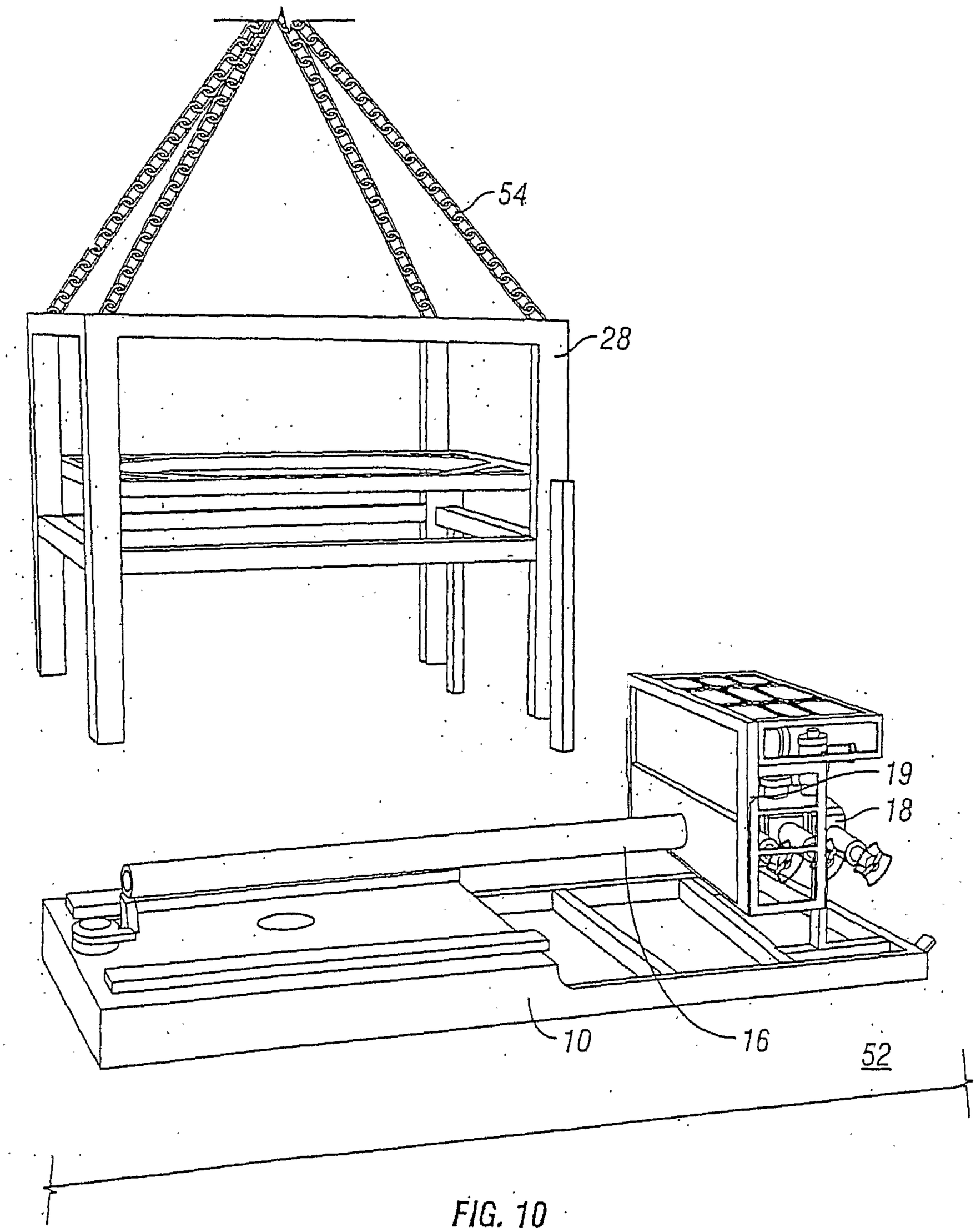

FIG. 10

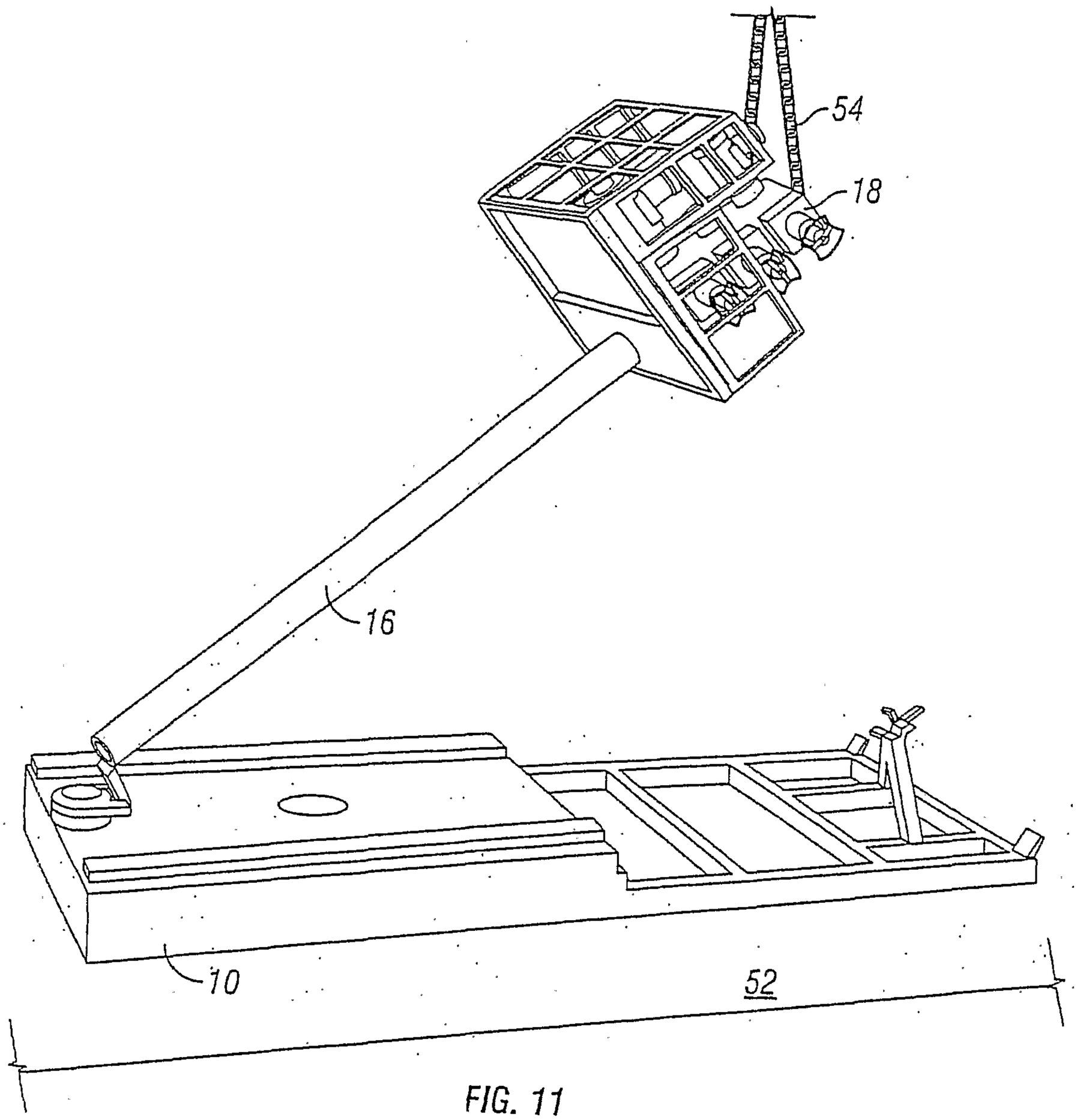

FIG. 11

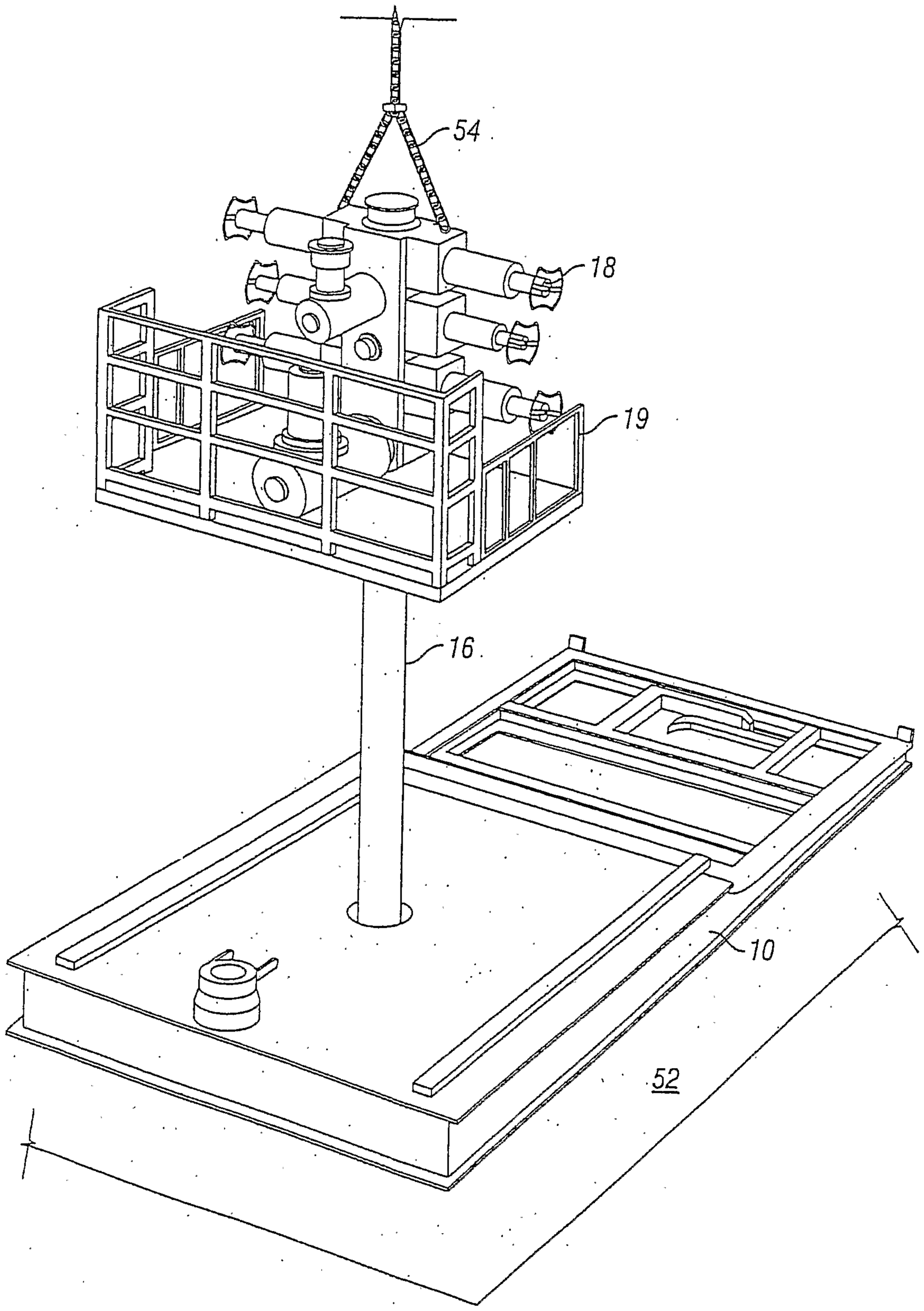

FIG. 12

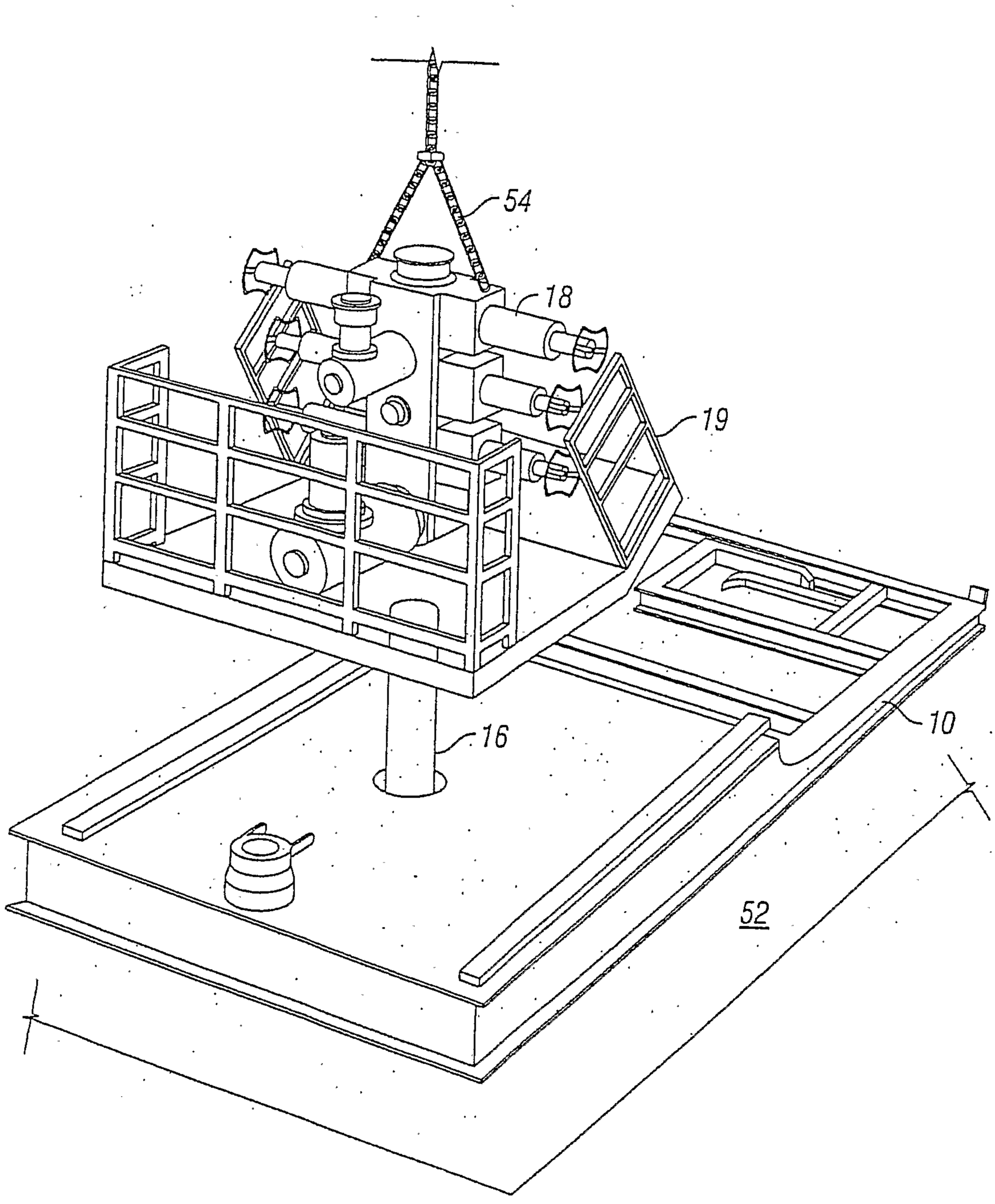

FIG. 13

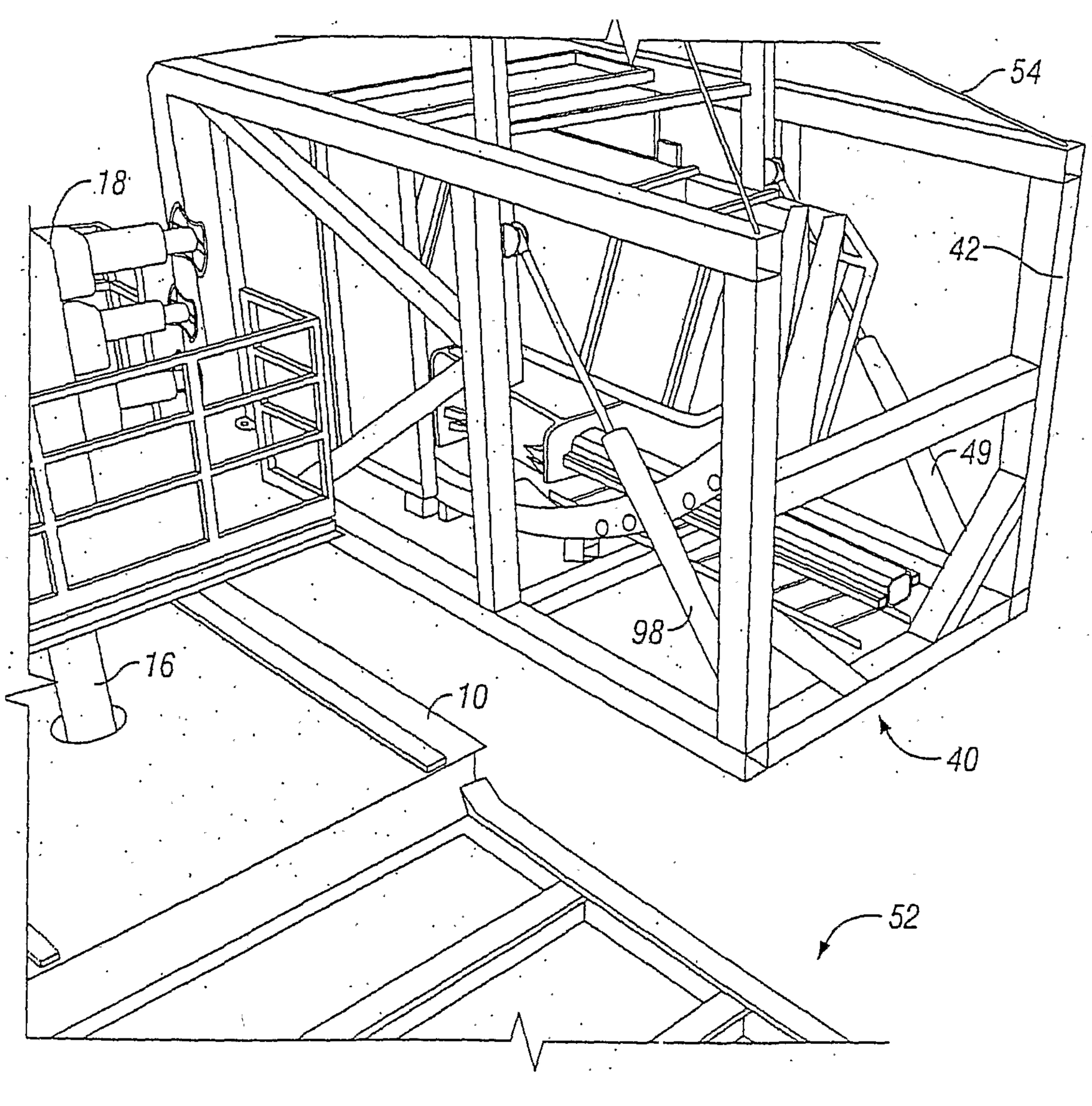

FIG. 14

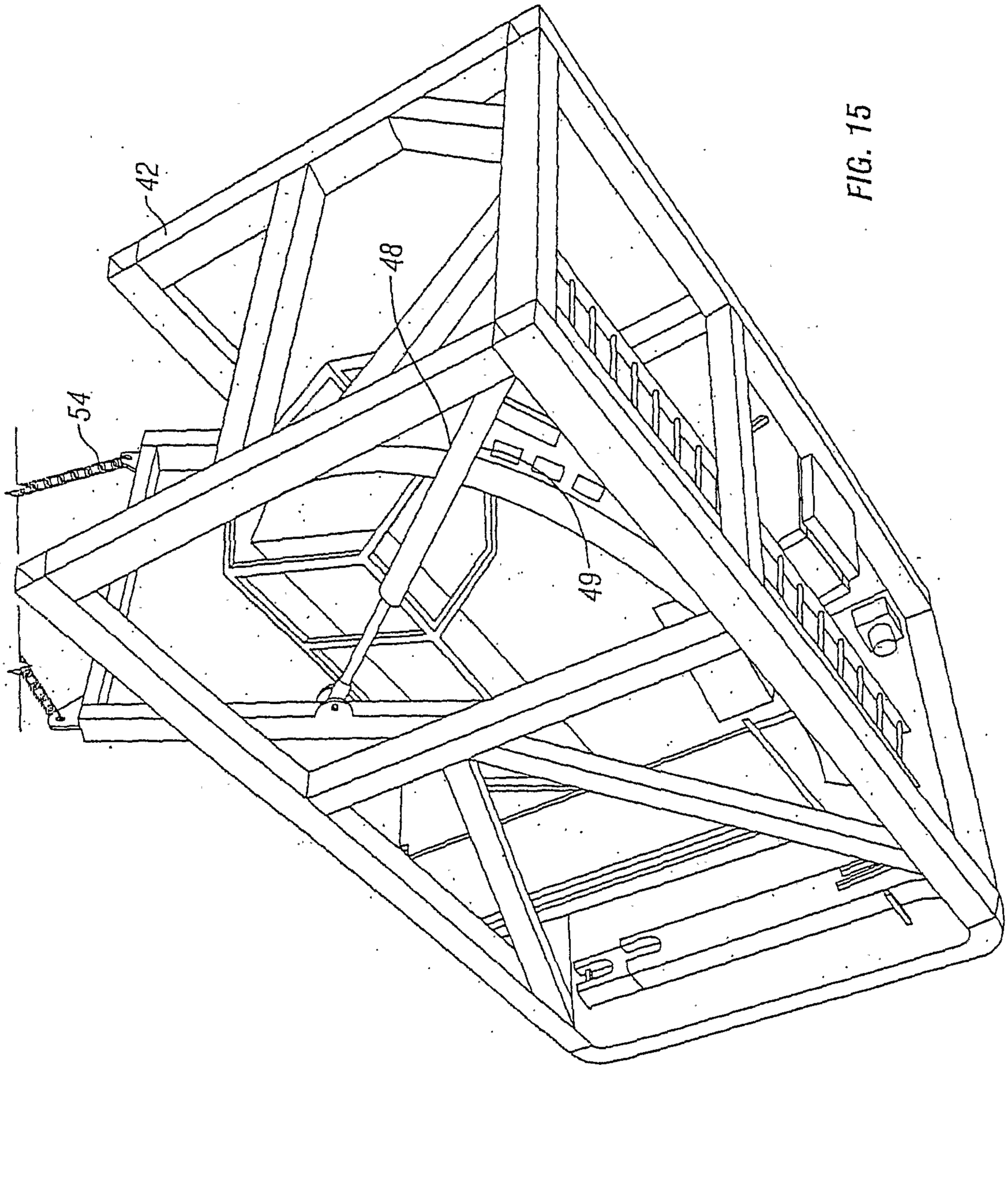

FIG. 15

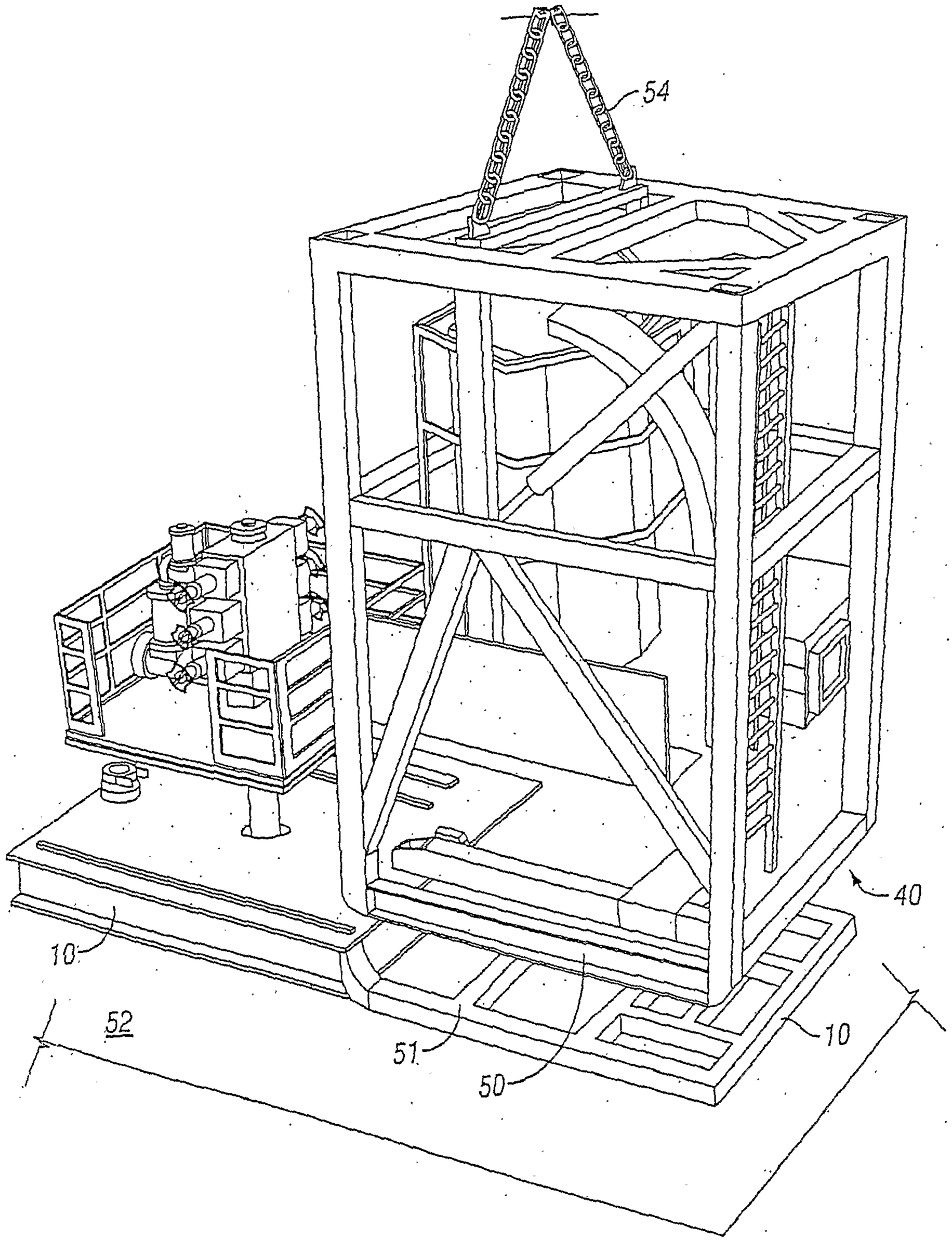

FIG.16

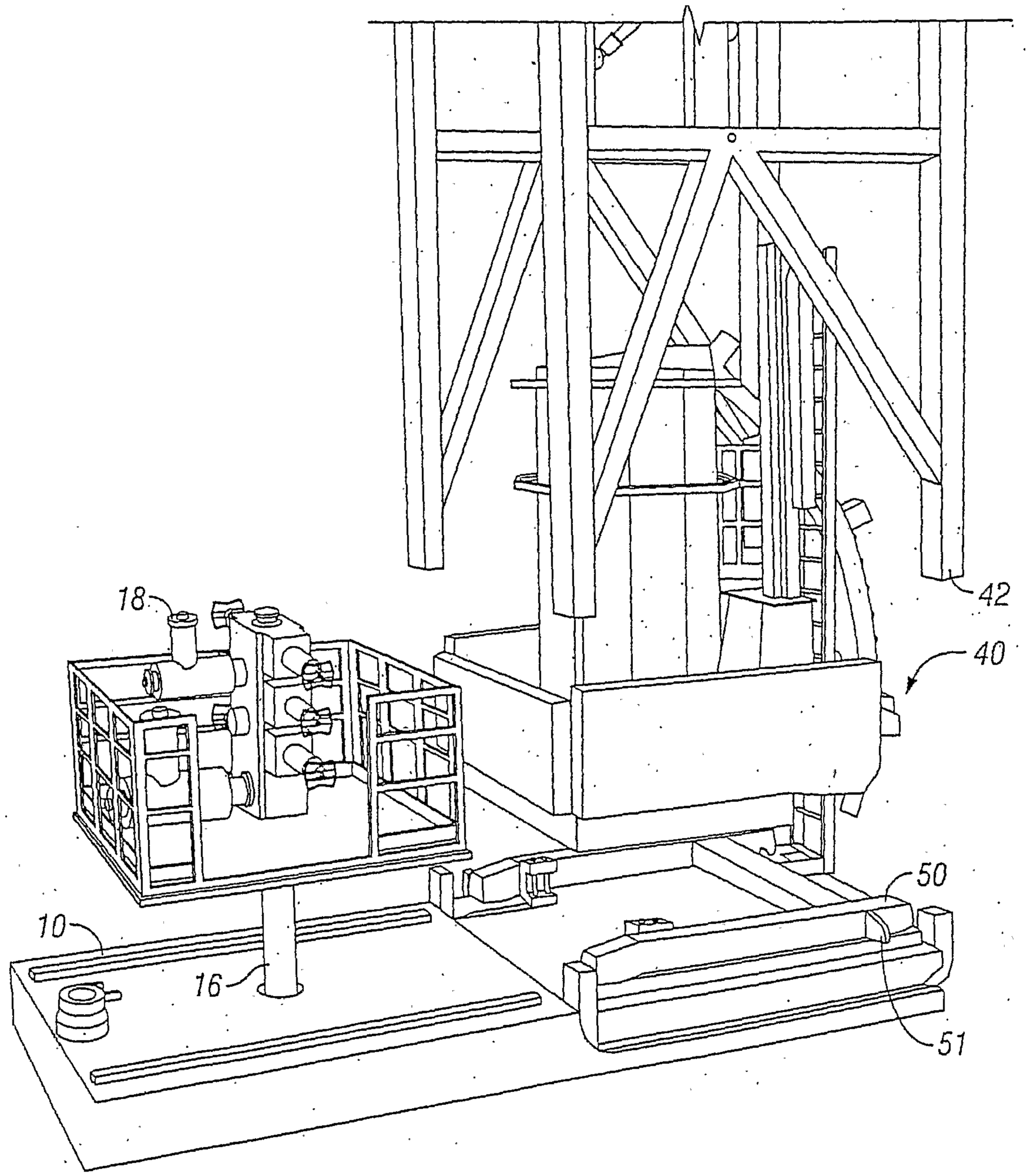

FIG. 17

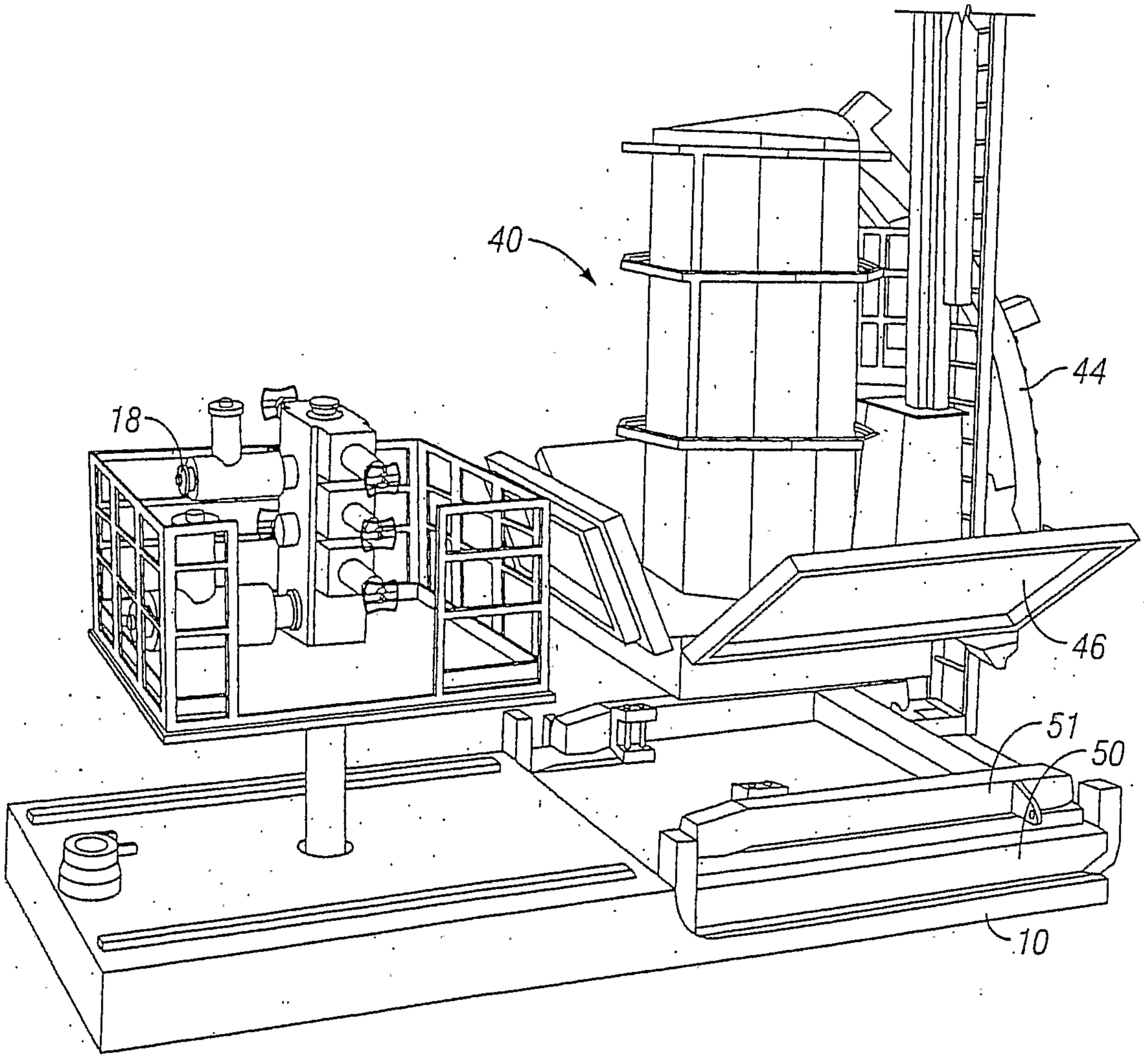

FIG. 18

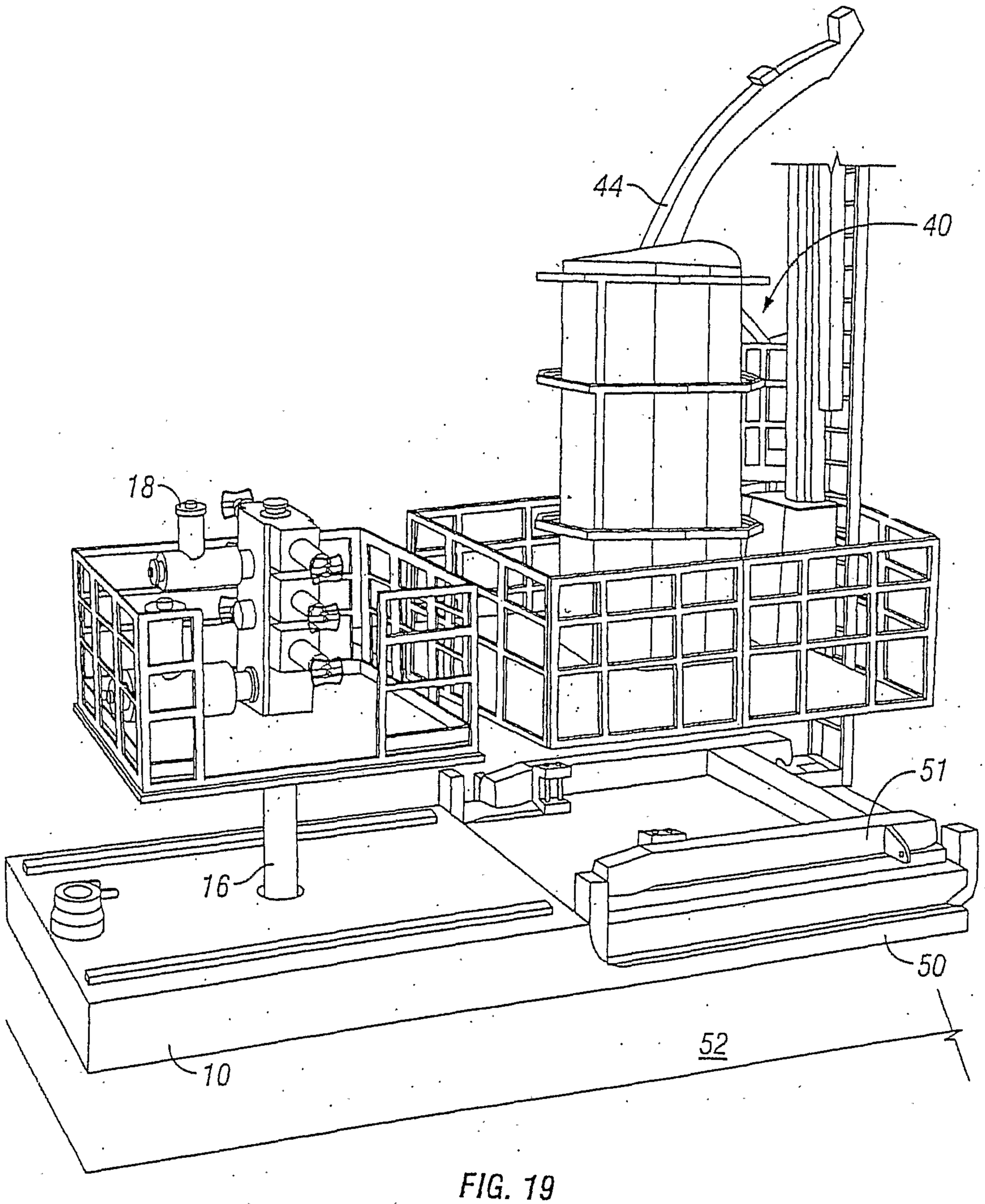

FIG. 19

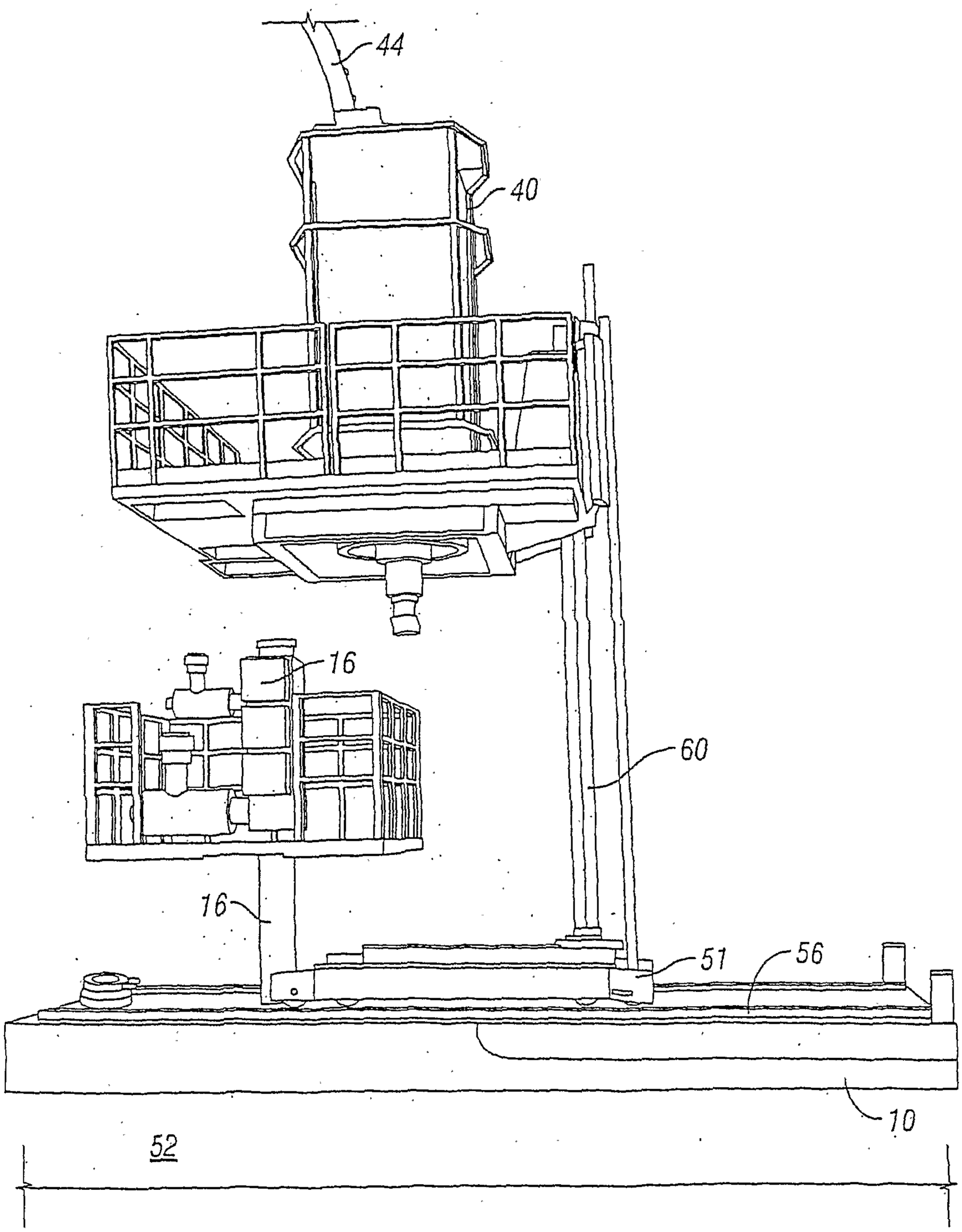

FIG. 20

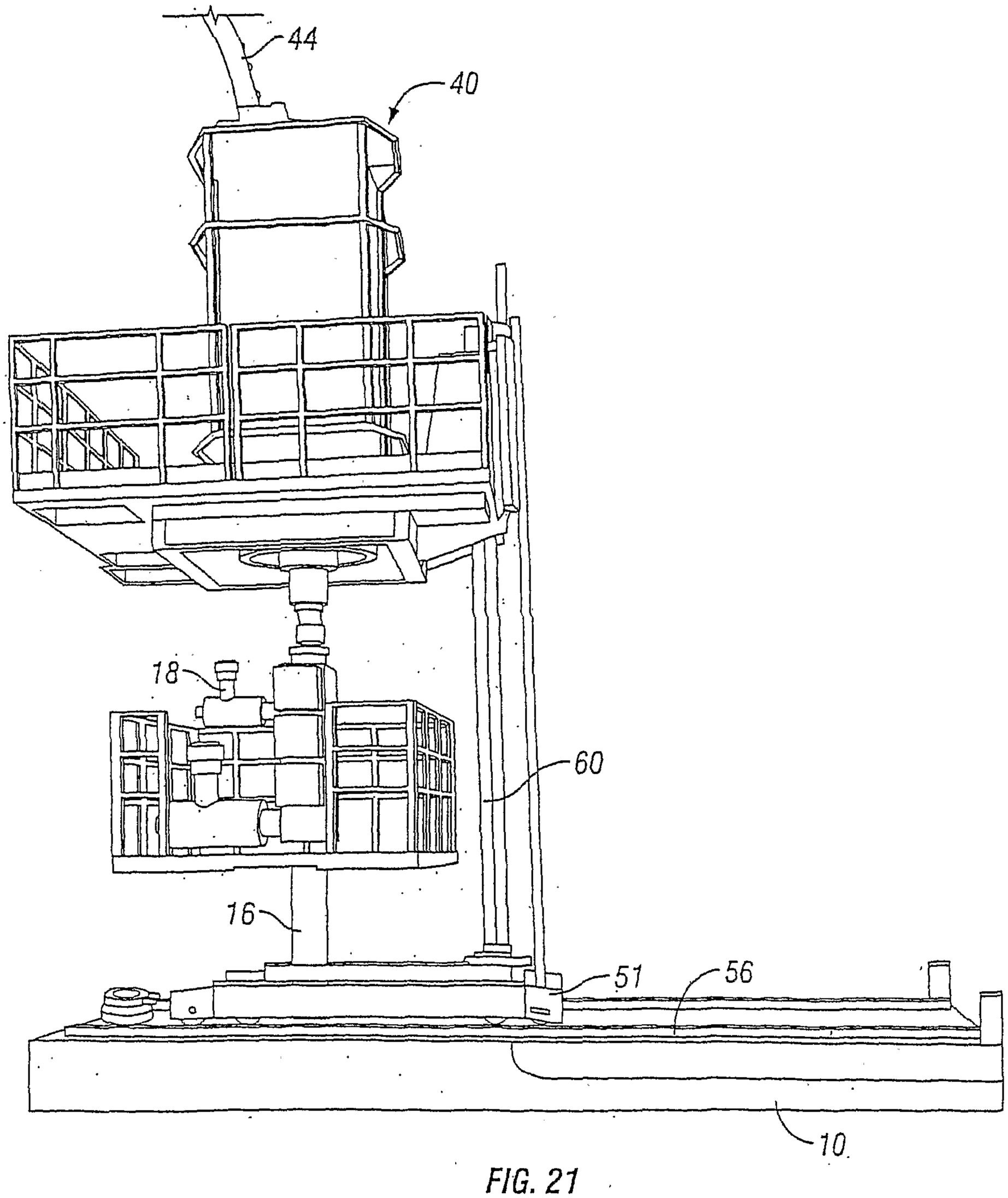

FIG. 21

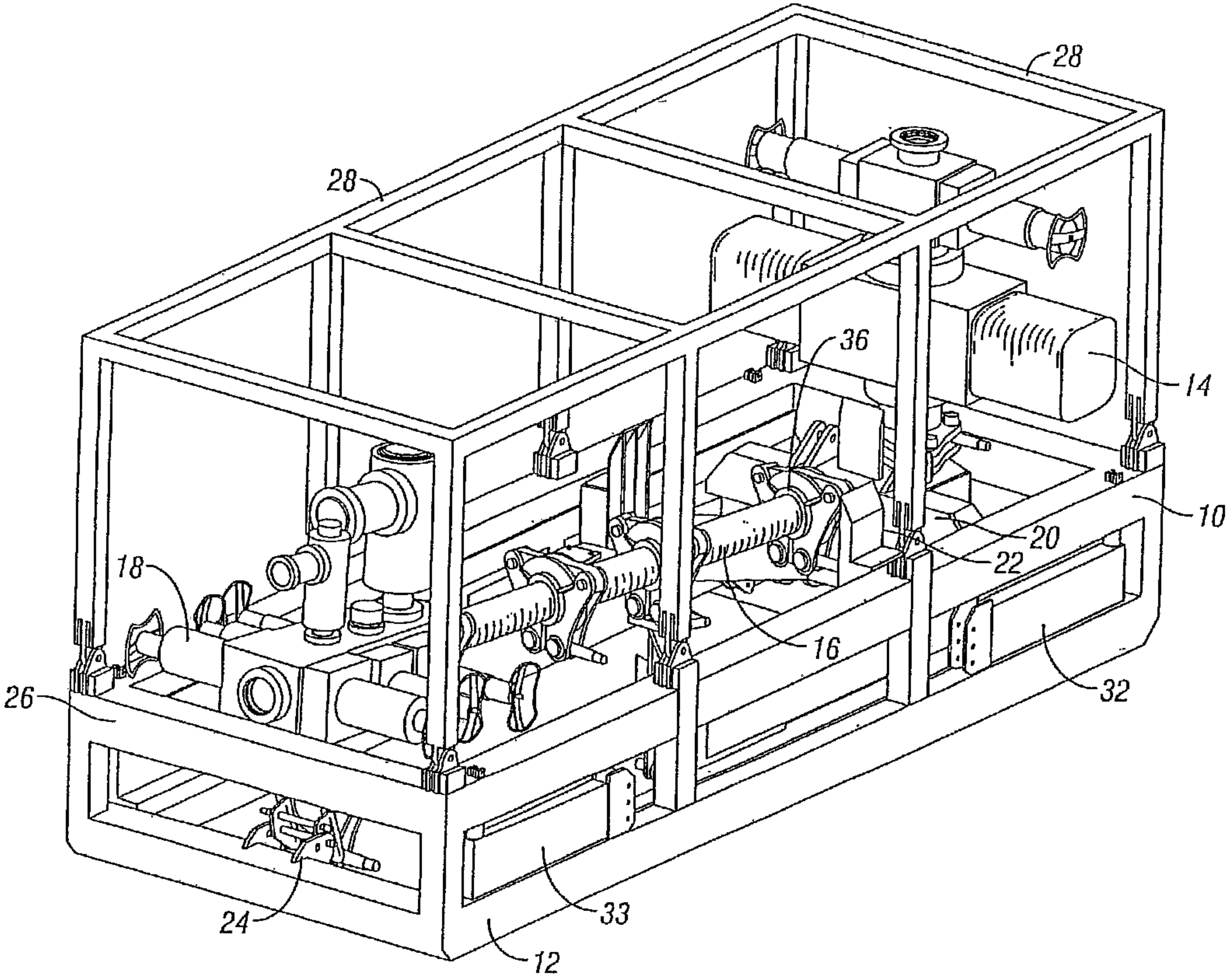
28
28
36
14
10
20
22
18
16
26
32
24
33
12