G. ROY.

INFANTRY FORT.

APPLICATION FILED NOV. 9, 1918.

1,299,620.

Patented Apr. 8, 1919.

2 SHEETS—SHEET 1.

FIG. 1.

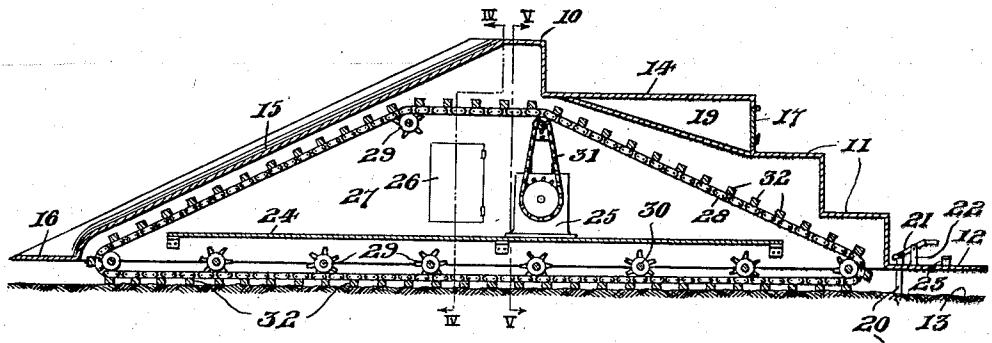

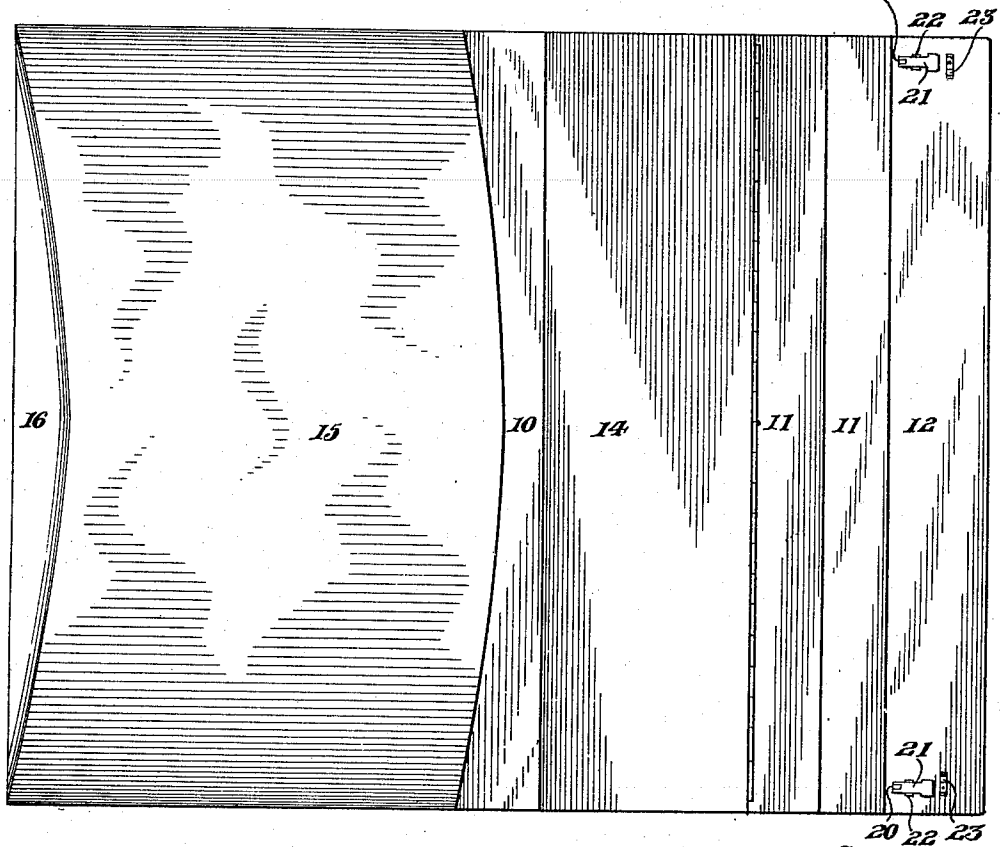

FIG. 2.

Inventor
G. Roy

By

Attorney

G. ROY.

INFANTRY FORT.

APPLICATION FILED NOV. 9, 1918.

1,299,620.

Patented Apr. 8, 1919.

2 SHEETS—SHEET 2.

FIG. 3.

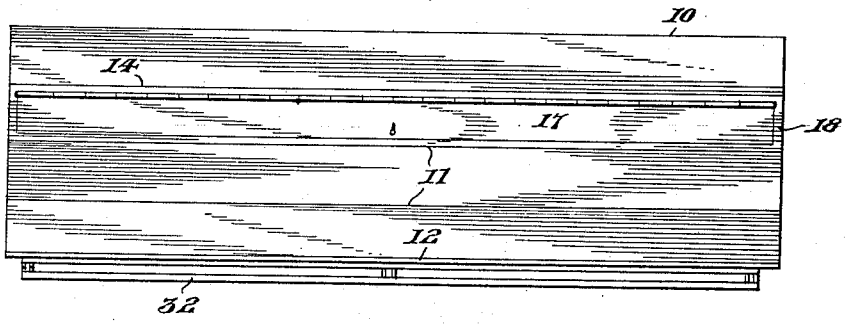

FIG. 4.

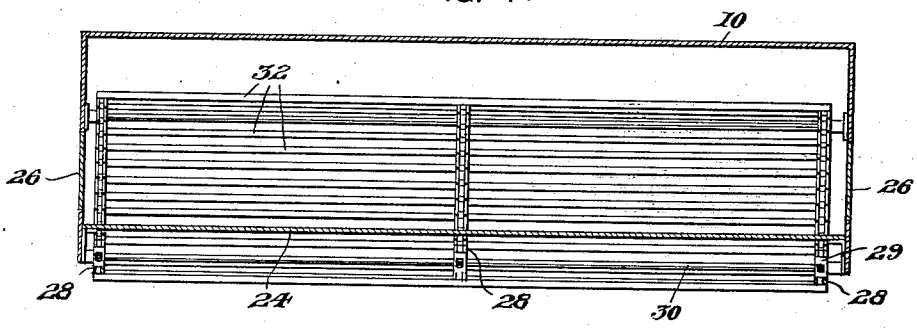

FIG. 5.

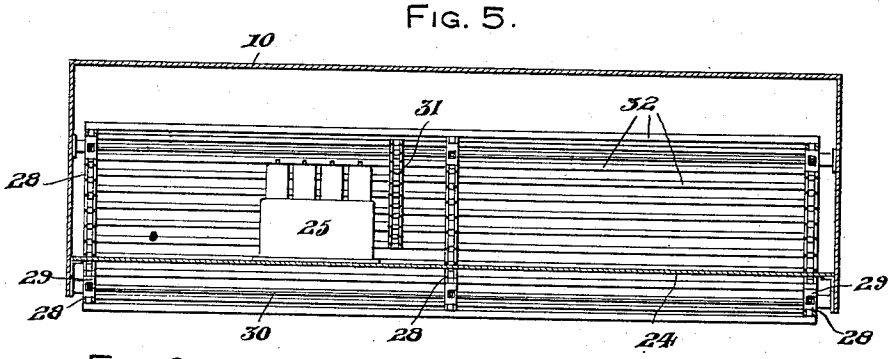

FIG. 6.

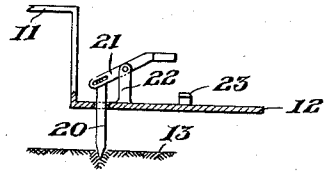

FIG. 7.

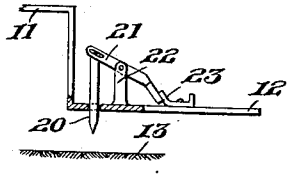

Inventor
G. Roy

By J. M. Wilson

Attorney

THE NORRIS PETERS CO., PHOTO-LITHO., WASHINGTON, D. C.

UNITED STATES PATENT OFFICE.

GEORGE ROY, OF CHICAGO, ILLINOIS, ASSIGNOR OF ONE-HALF TO PIOTR LZARNOPYSKI, OF CHICAGO, ILLINOIS.

INFANTRY-FORT.

1,299,620. Specification of Letters Patent. Patented Apr. 8, 1919.

Application filed November 9, 1918. Serial No. 261,811.

To all whom it may concern:

Be it known that I, GEORGE ROY, a subject of the Emperor of Austria, residing at Chicago, in the county of Cook and State of Illinois, have invented certain new and useful Improvements in Infantry-Forts, of which the following is a specification.

The primary object of the invention is the provision of a fort that is readily transferred from place to place, affording protection to soldiers when firing upon the enemy, the same being capable of use during its travel over the ground with the soldiers mounted thereon.

A further object of the invention is to provide a motor driven fort capable of traveling toward and away from the enemy's lines for carrying guns and soldiers enabling the shots to be fired at the enemy under the protection of the fort warding off oncoming missiles, the fort being easy to manufacture and possessing great strength and durability.

My invention will be fully described in connection with the accompanying drawings in which like reference characters designate corresponding parts throughout the several views.

In the drawings,

Figure 1 is a vertical longitudinal sectional view of the invention.

Fig. 2 is a top plan view thereof.

Fig. 3 is a rear elevation of the same.

Figs. 4 and 5 are vertical transverse sectional views taken upon lines IV—IV and V—V respectively of Fig. 1.

And, Figs. 6 and 7 are detail views of an anchoring means employed with the fort.

My fort is substantially in the form of a platform having a flight of steps, provided with motor propelling means and comprises a casing 10 substantially triangular in vertical longitudinal section with rearwardly arranged steps 11 leading from a base member or board 12 adjacent the ground such as 13 and a platform 14 in the form of a step adjacent the top of the fort.

The forward portion or substantially one half of the fort, comprises an inclined slightly arcuate side 15 sloping downwardly to a forward base board 16, the said side 15 constituting a bulletproof shield adapted to divert and ward off the oncoming bullets and other missiles of the enemy.

An elongated door 17 is provided in the riser 18 of one of the steps 11 for permitting guns and ammunition or any desired articles to be placed within a compartment 19 beneath the platform 14. Anchoring pins 20 are vertically movable through the rear base board 12 having operating levers 21 pivoted to post 22 carried by said board, the said pins being normally held elevated by means of swinging detents 23 upon the board 12 adapted to engage over the adjacent ends of the levers 21.

A support or deck 24 within the casing 10 supports a suitable motor 25 access being had to the interior of the casing and said deck 24 through a door 26 provided in one side 27 of the casing. A caterpillar form of tread is provided within the casing 10 formed of a plurality of sprocket chains 28 suitably mounted over sprocket wheels 29 as well as idlers 30, a power chain 31 from the motor 25 being operatively connected to the adjacent sprocket wheels 29 by means of a power shaft 32 journaled in the opposite ends of the casing 10.

The complete operation of the invention will now be fully understood, it being seen that the person upon the deck 24 may operate the motor 25 to cause the casing 10 to travel toward the enemy's lines while soldiers upon the rear board 12, steps 11 and platform 14 may fire over the top of the casing upon the enemy. Suitable supplies may be carried in the compartment 19 readily removed by opening the door or lid 17 while oncoming missiles will be deflected by the forward side 15 without injuring the soldiers positioned or riding upon as well as within the casing 10. The entire casing 10 will be formed of suitable material such as armor plate capable of withstanding bullets while the pins 30 may be projected in the ground 13 whenever it is desired to anchor the fort in any location.

What I claim as new is:—

1. A fort comprising a casing having a downwardly inclined curved front side adapted for deflecting bullets and with rearwardly arranged supporting steps, motor driven caterpillar tread traction means for the casing positioned therein and position anchoring means for the casing.

2. A fort comprising a casing having a downwardly inclined curved front side adapted for deflecting bullets and with rearwardly arranged supporting steps, motor driven caterpillar tread traction means for

the casing positioned therein, a door member in the riser portion of one of said rearwardly positioned steps communicating with a receiving compartment within the casing, a forward and a rear board carried by the casing adjacent the ground, anchoring pins shiftably carried by said rear board adapted for engaging the ground, operating levers for said pins and shiftable detents upon the rear board adapted for engaging said levers when the pins are in their normal elevated positions.

3. A traveling fort comprising a bullet-proof casing substantially triangular in longitudinal section having a chamber therein, a deck within said chamber, a motor upon said deck, a caterpillar tread traction means within said chamber operatively connected to said motor, the said casing having a forward downwardly sloping side of arcuate form adapted for the deflection of bullets, the rear side of the casing being of step formation and normally elevated anchoring means carried by the casing adjacent the bottom thereof adapted for engaging the ground therebeneath when the fort is stationary.

In testimony whereof I affix my signature.

GEORGE ROY.

Copies of this patent may be obtained for five cents each, by addressing the "Commissioner of Patents, Washington, D. C."