July 31, 1956 J. L. BOYER ET AL 2,757,330

RECTIFIER PROTECTIVE APPARATUS

Filed Jan. 19, 1953 3 Sheets-Sheet 1

Fig. 1.

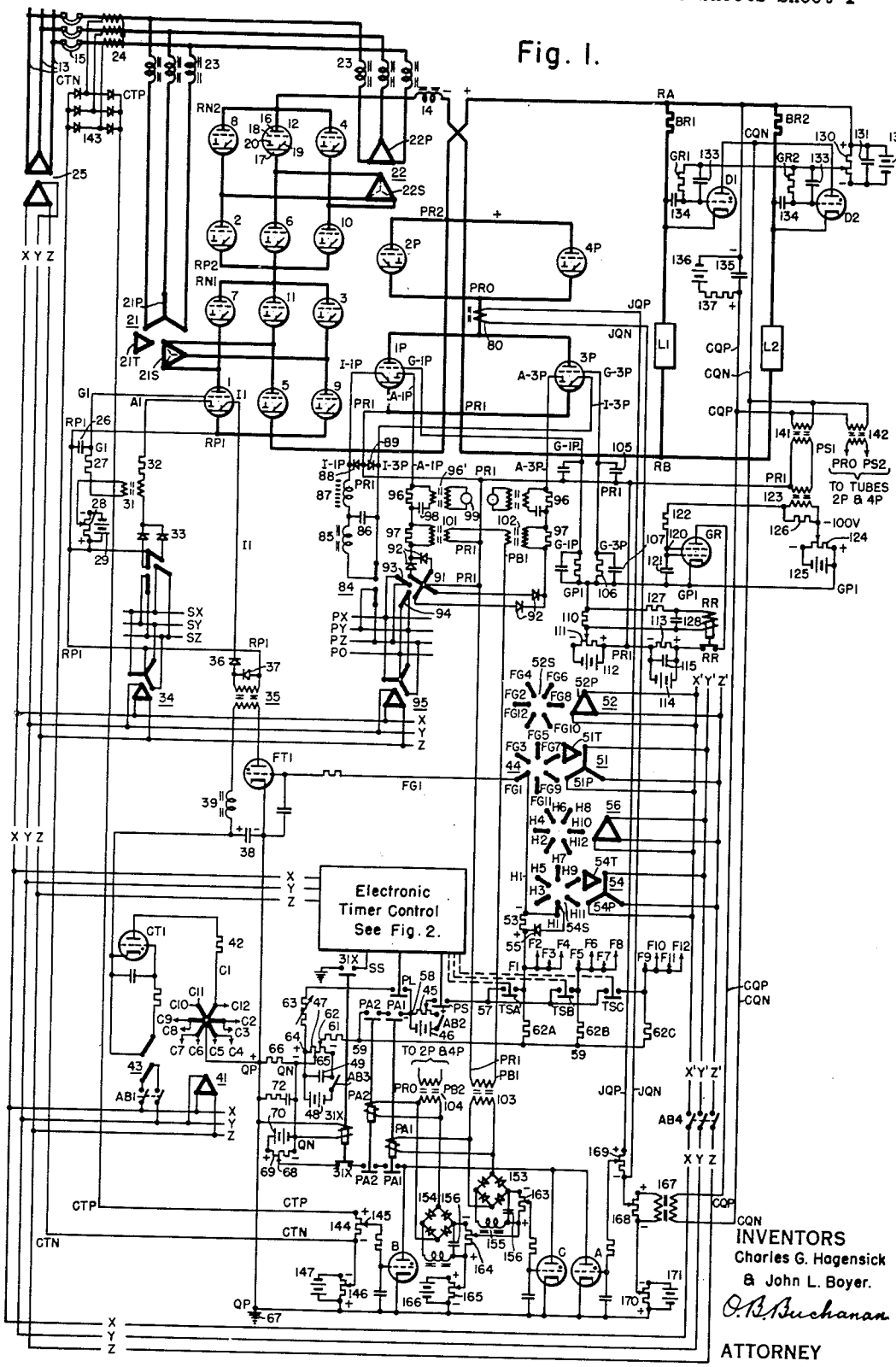

July 31, 1956 J. L. BOYER ET AL 2,757,330

RECTIFIER PROTECTIVE APPARATUS

Filed Jan. 19, 1953

3 Sheets-Sheet 2

Fig. 2.

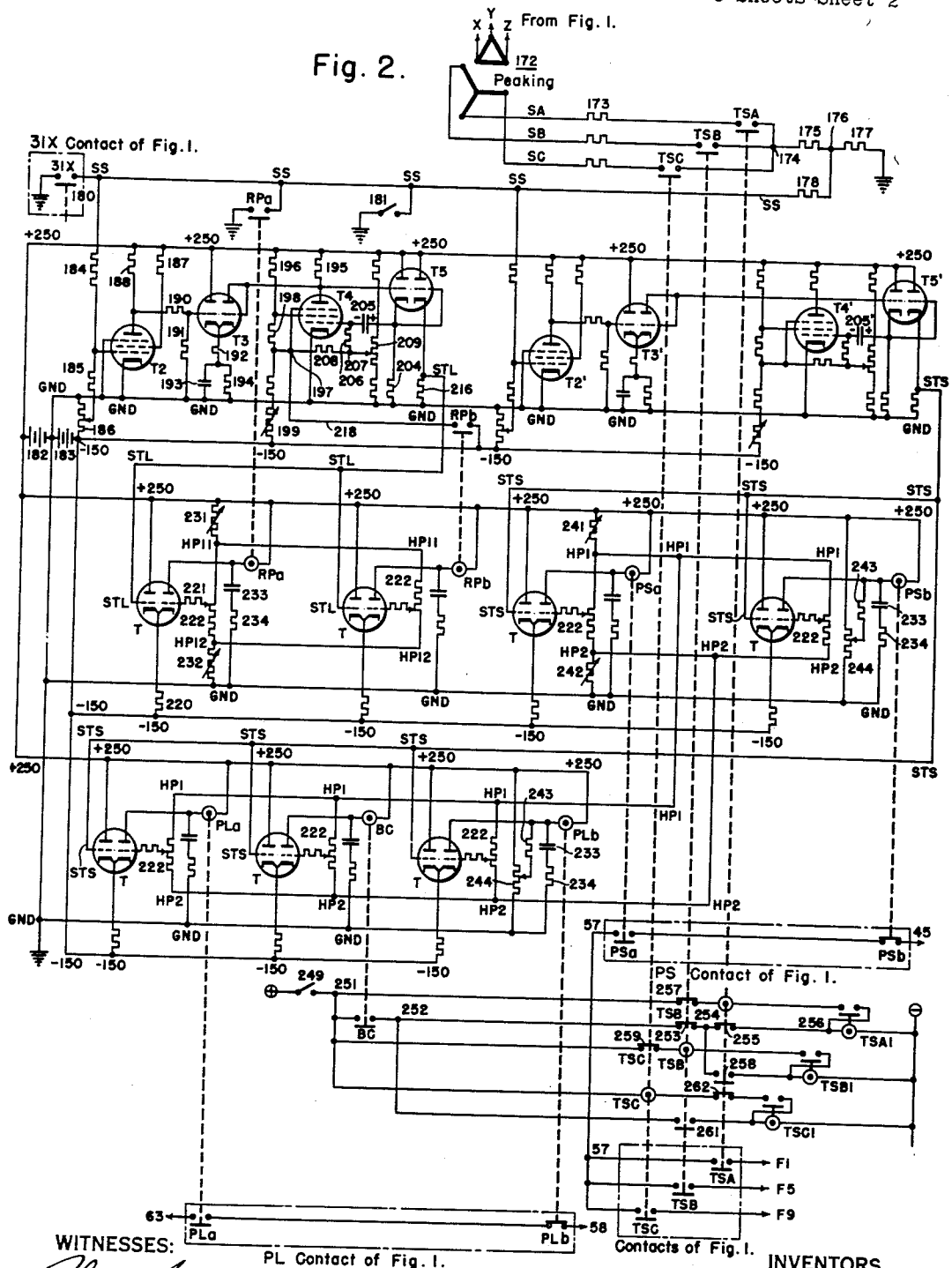

WITNESSES:

Robert C. Baird

Leon M. Garman

INVENTORS
Charles G. Hagensick
& John L. Boyer.

BY O. B. Buchanan
ATTORNEY

July 31, 1956 J. L. BOYER ET AL 2,757,330

RECTIFIER PROTECTIVE APPARATUS

Filed Jan. 19, 1953 3 Sheets-Sheet 3

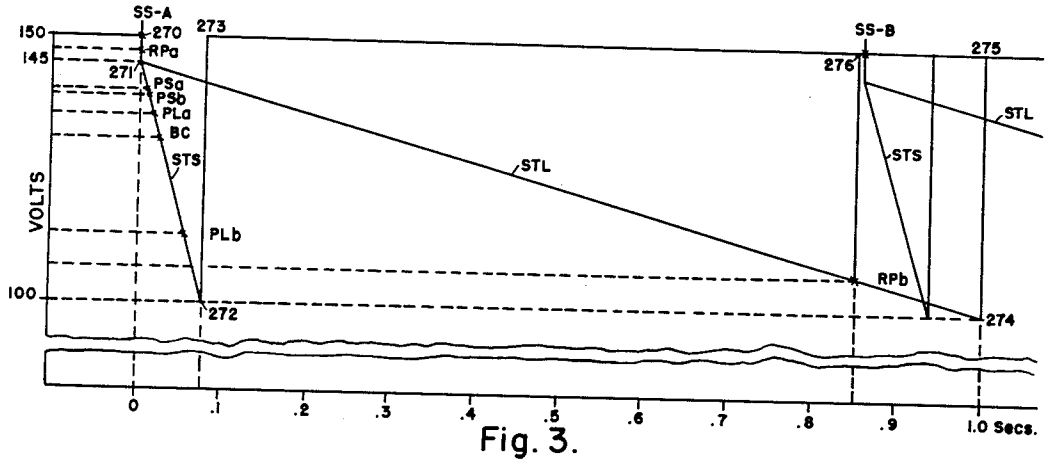

Fig. 3.

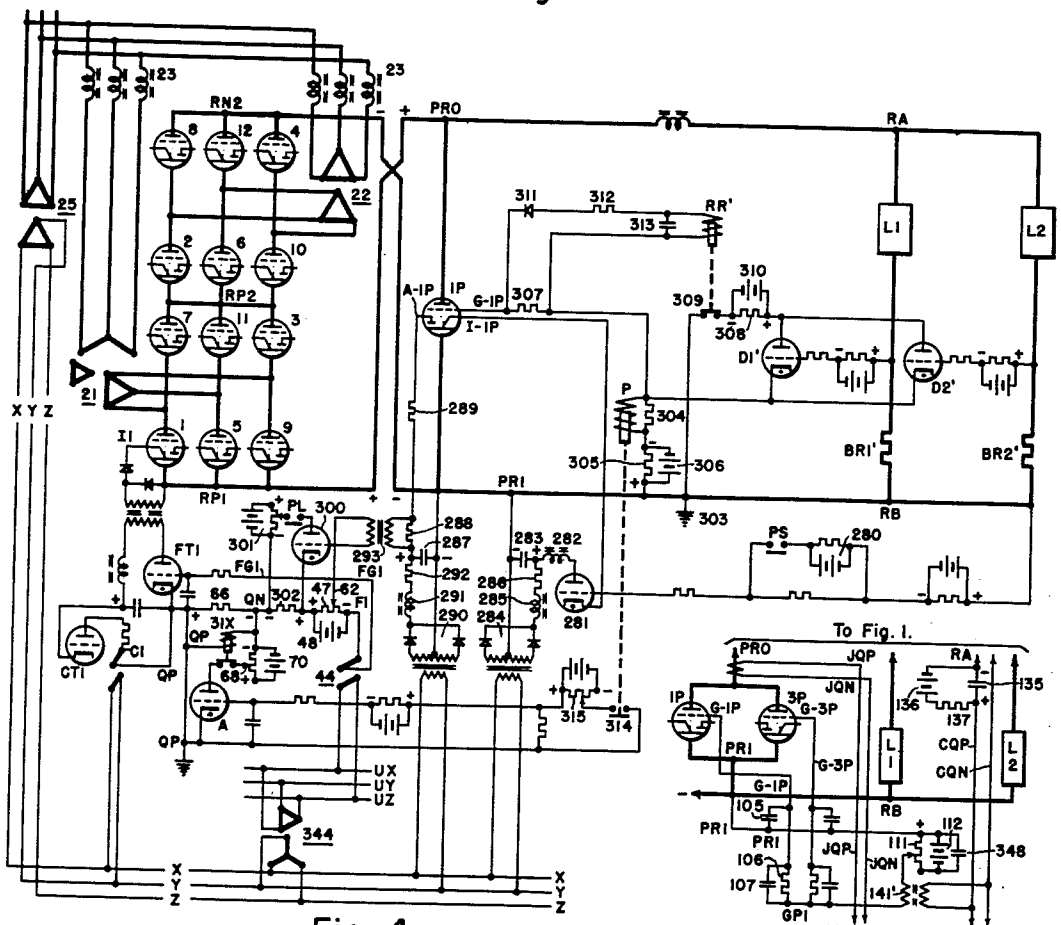

Fig. 4.

Fig. 5.

WITNESSES:

Robert C. Baird

Leon M. Garman

INVENTORS
Charles G. Hagensick
& John L. Boyer.

BY O. B. Buchanan

ATTORNEY

United States Patent Office 2,757,330 Patented July 31, 1956

2,757,330

RECTIFIER PROTECTIVE APPARATUS

John L. Boyer and Charles G. Hagensick, Pittsburgh, Pa., assignors to Westinghouse Electric Corporation, East Pittsburgh, Pa., a corporation of Pennsylvania

Application January 19, 1953, Serial No. 332,036

18 Claims. (Cl. 321—14)

Our invention relates to a protector-ignitron, or group of ignitrons, which is used as a high-speed electronic short-circuiting device for short-circuiting a power-line within a few microseconds after the development of a randomly occurring short-circuited condition in the load-equipment which is connected to said power-line. We have found that this prompt and complete short-circuiting of a power-line, in response to a fault, can best be accomplished through the use of a short-circuiting protector-tube in the form of an ignitron in which a holding or exciting-arc has previously been formed, and maintained by an auxiliary electrode or exciting anode, and in which a normally blocked grid-circuit is unblocked, in response to the fault, thus very quickly firing the protector-ignitron.

In an ignitron, however, it is not feasible to leave an exciting-arc on an auxiliary electrode for more than a few cycles, at the most (on a 60-cycle basis), as otherwise the arc would travel up the wall of the ignitron, where it would cause a failure. For safety reasons, it is desirable not to leave an exciting-arc on an auxiliary electrode for anything approaching such a time. According to one feature of our invention, therefore, we provide two parallel-connected protector-ignitron circuits, and we initiate the exciting-arc on the auxiliary electrode of first one tube and then the other, holding these arcs long enough for a small period of overlap, so that at least one of the two protector-tubes is always carrying an exciting-arc, and thus stands ready to short-circuit the power-line or bus, whenever the control-grid of the protector-tube is released. The ignitors of these two parallel-connected protector-ignitrons are alternately fired or energized, at half-cycle intervals, from an ordinary commercial circuit such as a 50-cycle or a 60-cycle circuit. We provide a means for applying energizing-impulses of limited durations to the respective exciting anodes of these tubes, and the durations of the energizing-impulses are such that there is an overlapping of the arc-holding conditions of the exciting anodes of the two parallel-connected protector-tubes.

In cases in which the power-line is energized in successive pulses of very short durations, a single protector-tube may be used. In such a case, the exciting anode of the protector-tube may first be fired, so that the protector-tube stands in readiness to protect the power-line as soon as its grid is released. Then, when the current for the holding-arc is established, and is being properly carried by the exciting anode, the power-line pulse may be started, with the assurance that the protector-tube is ready to protect the load-equipment if it should develop a short-circuit.

Other features of our invention relate respectively to the fault-detection means, and to the grid-circuit control for the protector-tube or tubes. When the power-line is a direct-current line, powered by a rectifier-assembly from an alternating-current supply-line, certain other features of our invention provide quick arc-suppression in the rectifier-tubes, in response to the release of the protector-tube or tubes, or in response to a failure of the holding-anode of the protector-tube or tubes.

With the foregoing and other objects in view, our invention consists in the circuits, systems, combinations, parts, apparatus, and methods of design and application, hereinafter described, and illustrated in the accompanying drawing, wherein:

Figure 1 is a considerably simplified drawing of an otherwise complete equipment, including circuits and apparatus, illustrating one form of embodiment or application of our invention, in a form in which two parallel-connected protector-tubes or protector-tube circuits are used, in which the exciting anode of first one tube and then the other is fired, so that at least one of the tubes is carrying a holding-arc at all times, although neither one of the tubes carries such an arc continuously.

Fig. 2 is a simplified diagram of circuits and apparatus indicating an electronic timer-control which is indicated by block-diagram in Fig. 1,

Fig. 3 is a time-diagram of certain features of the timer-control,

Fig. 4 is a simplified diagram of circuits and apparatus illustrating an alternative form of embodiment of a part of the apparatus shown in Fig. 1, the change relating to a system in which the direct-current power-line is energized only in very brief pulses, and in which the auxiliary anode of the protector-ignitron is first fired, after which the power-line pulse is initiated, and

Fig. 5 shows a modified form of embodiment of another portion of Fig. 1, relating to the control-means whereby the grids of the protector-tubes are released in response to the detection of a fault in the load-equipment.

Fig. 1 shows an exemplary form of embodiment or application of our invention, in which a three-phase or other polyphase bus **13** supplies sixty-cycle energy to a group of twelve power-supplying rectifier-ignitrons, numbered 1 to 12, which supply high-voltage direct-current energy, through a filter-reactor **14**, to a direct-current power-line RA and RB, which energizes a load-equipment which may comprise any number of parallel-connected load-devices, such as L1 and L2, through individual ballast-resistances BR1 and BR2.

The load-devices L1 and L2, which are diagrammatically indicated by block-diagrams, are intended to be symbolic of any load-equipment which is subject to unpredictably occurring short-circuited conditions. In the actual circuit which is illustrated in Fig. 1, each of the load-devices L1 and L2 is the plate-circuit of a high-voltage high-vacuum radio-frequency oscillator-tube (not shown in detail). Such tubes are subject to "flash-arcs," which are high-current discharges of short-circuit magnitude, resulting from an unpredictable failure of the insulation which the tube normally provides between its main electrodes, as described in such publications as a paper by Dailey in Proc., National Electronics Conference, 1948, page 127; a paper by Bell et al. in J. I. E. E., vol. 83, 1938, page 176; a paper of Gossling in J. I. E. E., vol. 71, 1932, page 460; and a paper by Hansford et al. in J. I. E. E., vol. 65, 1927, page 308. Repeated "flash-arcs" of this nature cause gradual gas-evolution or a rise in gas-pressure within the tube, and a loss of emission. In order to protect such tubes, it is necessary to relieve them of their flash-arc currents within an extremely brief period of time, of the order of ten microseconds, or an even shorter period of time.

The rectifier-supplied direct-current bus RA and RB is protected by a primary or alternating-current circuit breaker **15**, which is much too slow to protect a tube which develops a flash-arc.

According to our invention, we provide a suitable number of protector-ignitrons 1P to 4P which are connected across the power-line RA—RB, preferably at a point after the filter-reactor **14**, that is, at a point directly across the positive and negative load-circuit buses RA and RB. In

the form of embodiment shown in Fig. 1, two of the protector-ignitrons, 1P and 3P, are connected in parallel to each other, and the other two protector-ignitrons 2P and 4P are also connected in parallel to each other, and the two parallel-connected groups are connected in series, across the positive and negative wire PR1 and PR2, although it is to be understood that a single pair of parallel-connected protector-ignitrons could be used, if it had a voltage-rating sufficiently high to reliably withstand the high voltage which is applied thereto.

As described and claimed in a companion application of Charles G. Hagensick, Serial No. 332,035, filed January 19, 1953, the rectifier-assembly 1 to 12 may be any suitable assembly of power-tubes having a control-circuit means, of any type which requires to be suitably energized before each conducting-period of that power-tube, in accordance with the principles which will be described hereinafter. Because of the rugged nature of ignitrons, and their ability to withstand heavy short-circuit currents, these twelve power-tubes 1 to 12 are illustrated as sealed ignitrons, which have an anode 16, a pool-type cathode 17, one or more control-grids 18, an ignitor 19, and an exciting or holding anode 20.

While the illustrated rectifier-equipment is not limited to any particular number of phases, it is illustrated as a twelve-phase system, consisting of two serially connected six-phase double-way rectifiers, each of which is equivalent to a three-phase full-wave rectifier, or a so-called three-phase bridge. The two six-phase double-way rectifiers are supplied from two power-transformers 21 and 22, having out-of-phase secondaries so as to produce line-to-neutral rectifier-phases according to a twelve-phase system, with the successive phases numbered 1 to 12, corresponding to the numbers of the rectifier-tubes. The first power-transformer 21 is illustrated as having a Y or star-connected primary 21P, a delta-connected tertiary 21T (and a delta-connected secondary winding 21S; while the other power-transformer 22 has delta-connected primary and secondary windings 22P and 22S. In rectifier-work, it is convenient to refer to the line-to-neutral secondary voltages, as if the secondary transformers 21S and 22S were star-connected, rather than being delta-connected (as in fact they could be), and these line-to-neutral or star secondary-voltages have accordingly been indicated in dotted construction-lines.

The primary windings 21P and 22P of the two power-transformers are energized, through alternating-current reactors 23, and through a primary circuit-breaker 15, from the bus 13. Polyphase current-transformers 24 are also provided, for responding to the total three-phase current which is supplied to the rectifier-assembly. The odd-numbered rectifier-tubes 1, 5, 9, and 7, 11, 3, are energized from the secondary winding 21S of the first power-transformer 21, with the supply-phase 1 being connected to the anode of tube 1 and the cathode of tube 7, while the supply-phase 5 is connected to the anode of tube 5 and the cathode of tube 11, and the supply-phase 9 is connected to the anode of tube 9 and the cathode of tube 3. The six even-numbered tubes 2, 6, 10, and 8, 12, 4, are energized in a similar manner from the secondary winding 22S of the second power-transformer 22.

It will thus be noted that there are four three-phase groups of rectifier-tubes, each of which acts as a three-phase rectifier-assembly, in which, as each tube ceases to conduct current, it commutates or transfers its current to the next lagging phase or rectifier-tube in that three-phase group. Thus, the three-phase group 1, 5, and 9 is positively energized from the secondary winding 21S, and it has its three cathodes connected to a common bus RP1 which is the positive output-bus of the entire rectifier-assembly. The three-phase rectifier-group 7, 11, and 3 is negatively connected to the same secondary winding 21S, and it has a common anode-connection RN1. The three rectifier-tubes 2, 6, and 10 are positively connected to the other secondary winding 22S, and these tubes have a common cathode-terminal RP2, which is serially connected to the common anode-terminal RN1 of the group 7, 11, and 3. Finally, the three rectifier-tubes 8, 12, and 4 are negatively connected to the secondary winding 22S, and they have a common anode-connection RN2 which serves as the negative output-lead of the entire rectifier-assembly.

The three-phase control-power for the various equipments is supplied from the bus 13 through a delta-delta excitation-transformer 25, which supplies power to an excitation-bus X, Y, Z.

The rectifier control-equipment for the rectifier-tube 1 is shown by way of example, and as being illustrative of the general nature of the equipments for the other rectifier-tubes. The circuits for the various grids, ignitors, and excitation-anodes of the several tubes, both rectifier-tubes and protector-tubes, are indicated by the letters G, I, and A, respectively, followed by the tube-designations.

The grid-circuit G1 for the rectifier-tube 1 is provided with a grid-cathode capacitor 26, a grid-resistor 27, and the potentiometer 28 of a negative grid-bias source, which is diagrammatically indicated by means of a battery 29, although actually such bias-sources are usually in the form of rectifiers (not shown), energized from the excitation-bus X, Y, Z. As is conventional in high-voltage ignitron-circuits, the grid-circuit G1 may also include the secondary of a coupling-transformer 31, the primary of which is connected in the circuit A1 of the excitation-anode, so as to give the grid a positive impulse when the holding-anode or excitation-anode fires.

The excitation-anode circuit A1 of the rectifier-tube 1 is shown as including a current-limiting resistor 32, in addition to the primary winding of the grid-coupling transformer 31, and it is shown as being energized, through rectifiers 33, from two adjacent phases of an auxiliary excitation-bus SX, SY, SZ, which is energized, through an auxiliary delta-star transformer 34, from the main excitation-bus X, Y, Z.

The ignitor-circuit I1 for the rectifier-tube 1 is shown as being energized from an ignitor-coupling transformer 35 through a serially connected rectifier 36, the secondary circuit of the transformer being shunted by a rectifier 37 to provide a circuit for the reverse-currents which are induced in the secondary. The ignitor-coupling transformer 35 is energized by a capacitor-discharge circuit which includes a firing-capacitor 38, a sloping inductor 39, and a grid-controlled firing-tube FT1, the suffix 1 indicating that the firing-tube FT is for the power-supplying rectifier-tube 1.

The firing-capacitor 38 is charged from a charging-transformer 41 which has a delta primary winding which is energized from the excitation-bus X, Y, Z. Thus, the negative terminal of the firing-capacitor 38 is connected to the star point of the six-phase star-connected secondary winding of the charging-transformer 41. The terminals of this six-phase secondary winding are connected to the charging-circuits C1 to C12 for the various rectifier-tubes 1 to 12, respectively. The charging-circuit C1 for the firing-capacitor 38 of the rectifier-tube 1 extends, through a current-limiting resistor 42, to the anode-circuit of a charging-tube CT1, the cathode of which is connected to the positive terminal of the firing-capacitor 38. The charging-tube CT1 is provided with a grid-circuit which is controlled by a grid-circuit transformer 43 which is energized from the excitation-circuit X, Y, Z through a switch AB1.

As described and claimed in the companion application of Charles G. Hagensick, the firing-tube FT1 is a grid-controlled tube or thyratron which is specially controlled in order to obtain very fast alteration of the rectifying angle of the rectifier-tube 1, to obtain a gradual initial voltage-buildup of the rectifier-assembly as a whole, and to obtain certain special features of arc-sup-

pression in the rectifier-tube 1. The firing-tube FT1 has a grid-circuit FG1, which essentially contains a source 44 of substantially sine-wave firing-control voltage, a variable positive-bias source, such as a potentiometer 45 energized by a battery 46 through a switch AB2, and a rapidly adjustable negative-bias source, such as a potentiometer 47 energized by a battery 48 through a switch AB3. The negative-bias potentiometer 47 may be shunted by a ripple-smoothing capacitor 49, to make sure that the negative bias-voltage is smooth, although this feature is not really necessary, especially when the bias-source is a battery 48, as shown. As a matter of fact, the negative-bias potentiometer 47 may supply either a negative bias or a positive bias to the grid-circuit FG1 of the firing-tube FT1, because this potentiometer is provided with two sliders, as shown, so that its polarity may be reversed.

The complete grid-circuit FG1 of the firing-tube FT1 may contain certain control-features other than the essential features just named. As shown in Fig. 1, this grid-circuit FG1 serially contains one phase of a sine-wave transformer-secondary 44, which is connected between the conductor FG1 and the conductor H1. The secondary phase, which is the sine-wave firing-control source for this grid-circuit FG1, is one phase of an open-star secondary-winding 44 of a sine-wave impulsing-transformer 51, which has a delta tertiary winding 51T and a star primary winding 51P which is energized from an auxiliary excitation-bus X', Y', Z', which is connected to the main excitation-bus X, Y, Z through a switch AB4. The other secondary terminals of this transformer energize the firing-tube grid-circuits for the other odd-numbered rectifier-tubes, as indicated. The corresponding sine-wave firing-control voltages for the firing-tube grid-circuits for the even-numbered rectifier-tubes are supplied by a sine-wave impulsing-transformer 52 having a delta primary 52P and an open-star six-phase secondary 52S.

Continuing the tracing of the firing-tube grid-circuit FG1 beyond the conductor H1 in Fig. 1, we come next to a ballast-resistor 53 which serves as a source of negative half-waves which are derived from a suitable secondary phase of a sine-wave impulsing-transformer 54, which is connected across the ballast-resistor 53 through a rectifier 55. The sine-wave impulsing-transformer 54 may be similar to the transformer 51 (except for a higher secondary voltage), having a star primary winding 54P, a delta tertiary 54T, and an open-star six-phase secondary winding 54S, which furnishes the negative half-sine waves for the firing-tube grid-circuits H1, H3, H5, H7, H9, H11, for the odd-numbered rectifier-tubes. Another negative-half-wave impulsing-transformer 56, similar to the transformer 52, is provided for the firing-control of the even-numbered rectifier-tubes. The negative-wave ballast-resistor 53, in Fig. 1, is connected between the conductor H1, and a firing-control conductor F1 for controlling the firing of the power-supplying rectifier-tube 1.

As set forth in the companion Hagensick application, the firing-control circuit F1 of Fig. 1 is used as the terminal of a special starting-circuit, which includes a timing-switch make-contact TSA which is connected between this circuit F1 and a control-circuit conductor 57. As a matter of fact, the corresponding firing-control circuits F2, F3, and F4, for the next three lagging-phase rectifier-tubes, 2, 3, and 4, respectively, are all connected to the firing-control circuit F1, so that all four of these consecutively numbered rectifier-tubes, 1 to 4 are fired simultaneously. These four rectifier-tubes are the minimum number of tubes which are necessary to establish a rectifier-circuit between the positive output-conductor RP1 and the negative output-conductor RN2, within the rectifier-assembly 1 to 12.

Later on, the rest of the rectifier-tubes will be fired, as will be subsequently described, and then, when the

impressed voltage on the tube No. 1 declines, the current which was being carried by this tube will be commutated to the next lagging tube, No. 5, of the three-phase group 1, 5, and 9; and when the tube 2 of the next lagging phase, behind the tube 1, receives a declining voltage, which is lower than the voltage which is impressed upon the next lagging tube, No. 6, of that three-phase group 2, 6 and 10, then the current which was being carried by the tube 2 commutes to the tube 6, and so on. At first, however, according to the Hagensick invention, only the consecutively numbered tubes 1, 2, 3, and 4 are initially fired.

As a matter of fact, provision is made, in Fig. 1, for initiating the energization of the direct-current power-line RA—RB, on the consecutively-numbered rectifier-tubes 1, 2, 3, and 4, the first time the power-line is energized, and the second time using the next four consecutively numbered rectifier-tubes, 5, 6, 7, and 8, by means of a timer-switch make-contact TSB, which connects the control-circuit conductor 57 to the firing-control conductors F5, F6, F7, and F8. When the power-line is again energized, for a third time, the last four rectifier-tubes, 9, 10, 11, and 12, are initially energized, through the medium of a time-switch make-contact TSC which is connected between the conductor 57 and the conductors F9 to F12. For subsequent energizations of the power-line, the cycle is repeated. The time-switches TSA, TSB, and TSC are a part of the electronic timer-control which will be explained in connection with Fig. 2.

The rectifier-firing control-circuit 57 is energized by the closure of a pulse-starting contact PS, which connects the circuit 57 to the slider of the positive-bias potentiometer 45, under the control of the electronic timer-control equipment of Fig. 2. As will be explained in connection with Fig. 2, the pulse-start contact PS remains closed for only some one or two milliseconds, or only long enough to initiate the firing of the four firing-tubes FT1, FT2, FT3, and FT4, or whichever other four firing-tube are being controlled through one of the time-switch contacts TSA, TSB, or TSC.

The negative terminal of the positive-bias potentiometer 45 is indicated at 58, and this terminal is normally connected, through the make-contacts PA1 and PA2 of two correspondingly numbered relays PA1 and PA2, to a control-circuit conductor 59. In Fig. 1, the make-contacts PA1 and PA2 are shown in their open, or de-energized positions, but when the apparatus is operating, the operating-coils PA1 and PA2 of these relays are both energized, so that both of these make-contacts will be closed. This type of illustration is in accordance with the usual practice of illustrating all relays in their de-energized positions. The same relay-designation is applied to the operating-coil, and to all of the contacts, of any given relay, as a means of convenient identification, and to indicate the correlation of the parts. The energization of the relay-coils PA1 and PA2 will be subsequently described.

The control-circuit conductor 59 is connected, through a resistor 61, to a slider 62 on the previously described potentiometer 47, which can supply either a positive or a negative bias-voltage, according to its adjustment, although normally it would be adjusted to furnish a negative grid-biasing voltage. The conductor 59 is also permanently connected to all twelve of the firing-controlling conductors F1 to F12, through resistors 62A, 62B, and 62C, respectively.

As will be explained in connection with the electronic timer-control of Fig. 2, this control-apparatus is so equipped that, soon after the closure of the pulse-starting time-switch contact PS, and while the four first-energized rectifiers 1 to 4 or 5 to 8, or 9 to 12, as the case may be, are still firing, a so-called pulse-length contact PL is closed, which connects the control-circuit 58, through a rapidly variable resistance 63, to the positive terminal 64 of the negative-bias potentiometer 47, thus

applying a positive bias to the control-circuit conductor 59, or at least making this conductor less negative (according to the adjustment), and thus applying a suitable positive or grid-firing voltage, through the resistors 62A, 62B and 62C, to the firing-circuit control-conductors F1 to F12 for all twelve of the rectifier-tubes. The time during which the pulse-length conductor PL remains closed determines the length of the pulse, or of the period of energization, which is applied to the power-line RA—RB.

The grid-biasing potentiometer 47 is provided with a second slider 65, which is connected to the negative terminal QN of an arc-suppression resistor 66. The positive terminal QP of the arc-suppression resistor 66 is connected to the negative terminal of the firing-capacitor 38, and to the cathode of the firing-tube FT1, and also to the common star-point of the secondary of the charging-transformer 41, which powers the charging-circuits C1 to C12 of all twelve of the charging-tubes CT1 to CT12, thus meaning that the QP conductors for the control-circuits of all twelve of the rectifier-tubes are connected together. These QP circuits are also all grounded, as indicated at 67.

The positive-terminal circuit QP of the arc-suppression resistor 66, in Fig. 1, is also connected to the cathodes of three arc-suppression thyratrons A, B, and C. The anodes of these three arc-suppression thyratrons A, B, and C are connected, through additional make-contacts PA1 and PA2 of the previously mentioned relays PA1 and PA2, and also through a back-contact 31X of a reset-relay 31X, to the slider 68 of a negative-bias potentiometer 69, which is powered through a battery 70. The negative terminal of this negative-bias potentiometer 69 is connected to the negative terminal QN of the arc-suppression resistor 66.

The operating coil of the reset-relay 31X is connected across the terminals QP and QN of said arc-suppression resistor 66. This 31X coil is also shunted by a resistor-capacitor time-delay circuit 72, which delays the dropout time of the relay. The reset relay 31X may be designed to pick up within some four or five cycles, or whatever other arc-suppression time may be required, for suppressing the arcs in the rectifier-tubes 1 to 12. When this reset-relay 31X picks up, it opens its back-contact 31X in the plate-circuit 68 of the arc-suppression thyratrons A, B and C, thus removing the arc-suppressing negative bias from the resistor 66 in the grid-circuit of the firing-tube FT1. This also deenergizes the operating coil 31X of the reset relay, which permits this relay to drop out, in accordance with whatever dropout-time it has, thus reclosing its back-contact 31X and reconnecting the plate-circuits of the arc-suppression thyratrons A, B, and C, in readiness for another arc-suppressing operation.

An arc-suppressing operation is performed, for suppressing the arcs in the twelve power-supplying rectifier-tubes 1 to 12, thus imposing an impediment against the energization of the power-line RA—RB, in the event of the application of a releasing grid-biasing potential to the grid-circuit of any one of the three arc-suppression thyratrons A, B, and C. The control-means for these arc-suppression grid-circuits will best be described after the rest of the apparatus of Fig. 1 has been described, and while the operation of the device is being described.

The control-circuits and connections for the protector-ignitrons 1P, 2P, 3P, and 4P will now be described. The cathodes of the protector-tubes 1P and 3P are connected together, in a circuit PR1, which is connected to the negative rectifier-output circuit RN2, and which is also connected to the negative power-line conductor RB. The common anode-circuits of these two protector-tubes 1P and 3P are serially connected to the common cathode-circuit PR0 of the other two protector-tubes 2P and 4P, and an impulse current-transformer 80 is connected in this series connection. The anodes of the second two protector-tubes 2P and 4P are connected together in a common circuit PR2, which is connected to the positive power-line conductor RA.

A simplified version of the control-circuit, apparatus and connections for the two parallel-connected protector-tubes 1P and 3P is shown in Fig. 1, in sufficient detail for an explanation of the operation, with the understanding that similar controls can be used for the other pair of protector-tubes 2P and 4P, or this second pair of protector-tubes may be omitted entirely, if each of the tubes 1P and 3P of the first pair is capable of withstanding the output-voltage of the rectifiers.

The ignitor-circuits I–1P and I–3P of the protector-ignitrons 1P and 3P are fired alternately, on alternate half-cycles of the 60-cycle rectifier-supplying circuit 13, by means of a conventional reactor-type firing-circuit, consisting of a feed-transformer 84, a linear reactor 85, a firing capacitor 86, a saturable reactor 87, and rectifiers 88 and 89.

The excitation-anode circuits A–1P and A–3P of these two protector-tubes 1P and 3P are each fed from two phases (90° apart, in the illustrated embodiment), of a four-phase star-connected secondary winding 91, through rectifiers 92. The transformer secondary 91 is energized from two primary windings 93 and 94 which are energized from an auxiliary four-wire excitation-bus PX, PY, PZ, PO, which is in turn energized from a delta-star transformer 95, which is in turn energized from the main excitation-bus X, Y, Z. The same auxiliary four-wire excitation-bus PX, PY, PZ, PO is also used to energize the feed-transformer 84 for the ignitor-circuits I–1P and I–3P.

The currents which are fed to the excitation-anode circuits A–1P and A–3P of the protector-tubes 1P and 3P are limited, in each case, by two current-limiting resistors 96 and 97. Each of the resistors 96 is shunted by a small transformer 96′ and a capacitor 98, for energizing a lamp 99 for providing a visual indication when the corresponding excitation-anode is periodically conducting, during successive periods of somewhat more than a half-cycle each. The other current-limiting resistors 97 of the two excitation-anode circuits A–1P and A–3P are respectively shunted by transformers 101 and 102, the secondaries of which are connected so as to buck each other in an excitation-signal circuit having the terminals PR1 and PB1, which are used to energize an insulating transformer 103, which energizes the operating coil PA1 of the relay PA1, and which is also used in connection with the arc-suppression control which will be subsequently described. As long as the excitation anodes A–1P and A–3P of the protector-tubes 1P and 3P are being successively energized, in proper fashion, so that an exciting-arc is always playing in at least one of the parallel-connected protector-tubes 1P and 3P, the insulating transformer 103 will be properly energized, so as to maintain the excitation of the relay PA1.

In case a second pair of protector-tubes 2P and 4P is used, as illustrated, there will be other excitation-signal terminals PR0 and PB2, corresponding to the described terminals PR1 and PB1, for energizing an insulating transformer 104 which energizes the operating coil of the relay PA2.

The control-grid circuits G–1P and G–3P of the protector-tubes 1P and 3P are normally negatively biased by an amount sufficient to block or prevent these tubes from breaking down when subjected to the output-voltage of the rectifier-assembly, even when the excitation-anodes A–1P and A–3P are conducting. Each of the control-grid circuits G–1P and G–3P has a grid-to-cathode capacitor 105, and a series resistor 106, the latter being shunted by a capacitor 107.

The two grid-circuits G–1P and G–3P then continue, from a common conductor GP1, through a negative-bias branch, extending from said conductor GP1 to the

common cathode-circuit PR1, through a current-limiting resistor 110 and a negative-bias potentiometer 111 which is energized from a battery 112. The common portions of the grid-circuits G–1P and G–3P also have a positive-bias branch, which extends from the common cathode-circuit PR1 through a positive-bias ballast-resistance 113, which is energized from a battery 114, and which is shunted by a capacitor 115. This capacitor 115 is charged by the positive-bias source 114, and it cooperates with the capacitors 107 which shunt the grid-resistors 106, so as to cause high initial grid-currents, which facilitate extremely rapid release of the protector-tubes 1P and 3P, in a matter of a few microseconds. The capacitors 107 which shunt the grid-resistors 106, provide high initial grid-currents for a few microseconds in the grid-circuits G–1P and G–3P, for releasing the protector-tubes 1P and 3P, while the grid-cathode capacitors 105 serve to prevent release by shockover, or sudden application of anode-to-cathode voltages. These grid-cathode capacitors 105 should be as small as possible, in order that they will not prevent a high speed of release of the protector-tubes 1P and 3P, respectively.

From the positive-bias ballast-resistor 113, the positive-bias branch continues through a back-contact RR of a reset-relay RR, and then through a grid-release thyratron GR to the common grid-circuit conductor GP1 for the two grid-circuits G–1P and G–3P of the protector-tubes 1P and 3P.

The grid-release thyratron GR has shield and control grids which are connected, in parallel, to a common grid-circuit 120, which has a grid-cathode capacitor 121, a grid-resistor 122, a control-pulse insulating-transformer 123, and a negative-bias potentiometer 124 which is energized from a battery 125. The secondary winding of the control-pulse insulating-transformer 123, which is included in the grid-circuit 120 of the grid-release tube GR, is shunted by a resistor 126.

The reset-relay RR is provided with an operating-coil RR which is connected across the current-limiting resistor 110 through a resistor 127. If necessary, the operating-coil RR of the reset relay may be shunted by a capacitor 128 in order to secure a delayed dropout-operation.

According to our invention, we provide a high-speed fault-detection means. In Fig. 1, a separate fault-detection means is associated with each of the ballast or buffer-resistors BR1 and BR2, which are connected in series with the respective loads L1 and L2. As shown, the negative terminals of the buffer-resistors BR1 and BR2 are each connected to the cathode of its own detector-thyratron D1 and D2, as the case may be. The grids of these detector-thyratrons D1 and D2 are provided with grid-resistors GR1 and GR2, respectively, which are connected to the bus RA through a common negative-bias potentiometer 130, which is shunted by a filter-capacitor 131, and energized by a battery 132. The grid-circuit of each of the detector-thyratrons D1 and D2 receives a positive signal across its associated buffer-resistance BR1 or BR2, as the case may be, when a load-current flows through that resistor.

In the event of a fault in one of the load-circuits L1 or L2, the voltage which is developed across the corresponding bias-resistor BR1 or BR2 becomes much greater than the negative bias of the potentiometer 130, causing a rapid release of the grid of the associated detector-thyratron D1 or D2. The speed of this grid-release is increased by having the grid-resistors GR1 and GR2 each shunted by a capacitor 133. The grid-circuits of the detector-thyratrons D1 and D2 have grid-to-cathode capacitors 134, which protect the thyratrons against shockover, or erroneous impulse-responsive firing as a result of sudden voltage-applications, but these grid-cathode capacitors 134 should be as small as possible in order to have a high rate of release of the detector-thyratrons D1 and D2 in response to a fault in the associated load L1 or L2.

The anodes of the two detector-thyratrons D1 and D2 are connected to a common anode-circuit CQN, which serves as the negative terminal of a detector-pulse control-circuit, the positive terminal of which is designated as CQP. This positive control-circuit conductor CQP is connected to the positive power-line conductor RA through a positively charged capacitor 135, which is charged from a high-voltage source, such as a battery 136, through a large resistance 137. When there is a fault in one of the loads L1 or L2, the voltage across its ballast-resistance BR1 or BR2 assists the voltage of the positively charged capacitor 135, and at the same time fires the corresponding detector-thyratron D1 or D2, so that the positively charged capacitor 135 is discharged, giving a fault-indicating control-pulse in the circuit CQP and CQN.

The detector-pulse control-circuit CQP and CQN is used to energize an insulating transformer 141, having secondary terminals PR1 and PS1, which energize the control-pulse insulating-transformer 123 in the grid-circuit of the grid-release tube GR. When the second pair of parallel-connected protector-tubes 2P and 4P is used, as illustrated, the detector-pulse control-circuit CQP and CQN will also energize a second insulating transformer 142, having secondary terminals PR0 and PS2 for performing a similar service for the protector-tubes 2P and 4P.

Attention will now be directed to the grid-control circuits for the various arc-quenching tubes A, B and C, which are shown at the bottom of Fig. 1.

The left-hand arc-quenching tube B, as shown in Fig. 1, involves a novel overcurrent-control as described in the companion Hagensick application. This overcurrent-control is obtained from the three-phase supply-line current-transformers 24, through a rectifier-bank 143, which provides a rectified output from said current-transformers, for energizing a current-transformer control-circuit CTP and CTN, which in turn energizes a grid-circuit potentiometer 144, having a slider 145 which is connected to the control-grid of the arc-quench tube B. The negative terminal CTN of the potentiometer 144 is connected to a negative-bias potentiometer 146 for the grid-circuit of said tube B, this negative-bias potentiometer being energized from a battery 147. Thus, when the polyphase supply-current becomes sufficiently large, as under fault-conditions, the supply-line current-transformers 24 apply a sufficiently positive voltage to the circuit CTP to release the slider 145, and hence the grid of the arc-quench tube B, thus firing this tube and applying the negative bias of the potentiometer 69 to the common circuit-portion QN of all of the grid-circuits of the firing-tubes, such as FT1, thus preventing any subsequent firing of any of the rectifiers 1 to 12 as long as the plate-circuit of said tube B remains connected to the potentiometer 69.

In accordance with our invention, the arc-quenching tubes C and A are controlled in various manners dependent upon the operation and control of the protector-tubes 1P to 4P.

The arc-quench tube C is released in the event of the loss of an excitation-arc in one or both of the parallel-connected protector-tubes 1P and 3P, and, if the second pair of protector-tubes 2P and 4P are used, then also in the event of the loss of an excitation-arc in both of the parallel-connected protector-tubes 2P and 4P. As previously explained, these excitation-arcs are needed, in the portector-tubes 1P to 4P, in order that load-fault protection may be available, that is, in order that the protector-tubes 1P to 4P may stand in instant readiness to be fired, by the release of their grids, in the event of a short-circuited condition on either one of the load-devices L1 or L2. As previously explained, this fault-protection availability in indicated by the presence of a continuing volt-

age-signal in both pairs of control-lines PR1—PB1 and PR0—PB2, which energize the respective insulating-transformers 103 and 104. These voltage-signals, which appear in the secondary circuits of the insulating transformers 103 and 104, are rectified by rectifier-bridges 153 and 154, respectively, filtered by inductors 155 and capacitors 156, and impressed on potentiometers 163 and 164, respectively, to provide negative bias in the grid-circuit of the arc-quenching thyratron C. This grid-circuit is also provided with a positive bias-voltage through a potentiometer 165 which is energized from a battery 166.

The arc-quench thyratron A has its grid-circuit controlled so as to be responsive to a fault-detection signal, or to the releasing or the firing of suitable protector-tubes 1P to 4P. By way of example, two alternative grid-firing means are used in the grid-circuit of the arc-quenching thyratron A, one grid-firing means being used as a safeguard for the other, so that the tube A may be fired by the quickest possible means, in the event of a short-circuited condition on one of the load-devices L1 or L2, or in the event of the releasing of the grids of the protector-tubes 1P to 4P, or in the event of the establishment of a load-shorting circuit through the bank of protector-tubes 1P to 4P. The fault-detector controlling-circuit pulse is taken from the previously described control-circuits CQP and CQN, and applied, through an insulating transformer 167, to a positive-bias potentiometer 168 in the grid-circuit of the arc-quenching thyratron A. In addition, the flow of a load-protecting short-circuiting current through the bank of protector-ignitrons 1P to 4P is detected by the previously described, serially connected impulse-transformer 80, which energizes a control-circuit JQP and JQN, which in turn energizes a positive-bias potentiometer 169 in the grid-circuit of the arc-quench tube A. This grid-circuit is also provided with a suitable negative biasing-voltage, through a potentiometer 170 which is energized from the battery 171.

Our protector-tube invention is illustrated, in Fig. 1, in connection with a rectifier-powered direct-current power-line which may be either continuously energized or pulse-energized, in a series of discrete voltage-pulses, each having a duration which is longer than it is desirable to maintain a holding-arc on the excitation-anode of any protector-ignitron, for fear that said arc would climb up on the side walls of the ignitron and cause a failure. The particular control-system which is illustrated in Fig. 1 is electronically controlled so as to produce a succession of short impulses, each having a duration of anything up to seventy-five milliseconds, or 4.5 cycles of the 60-cycle supply, at a pulse-rate of anywhere from one to eight pulses a second, by way of example.

The electronic control-equipment is indicated by a block diagram in Fig. 1, and a simplified diagrammatic showing of this electronic equipment is given in Fig. 2. Some of the features of the electronic timer-control which is shown in Fig. 2 were invented by R. B. Squires and J. B. Brittain.

The timing for the electronic control-circuits, as shown in Fig. 2, is synchronized with the 60-cycle rectifier-supply voltage by means of a three-phase bank of peaking-transformer 172, which are energized from the excitation-bus X, Y, Z of Fig. 1, and which in turn supply a succession of positive and negative peaks to three secondary-circuits SA, SB, and SC, each of which contains a resistor 173, and the correspondingly lettered time-switch make-contact TSA, TSB, or TSC, as the case may be. The three secondary circuits SA, SB, and SC are then combined into a single circuit at 174, which is continued on, through a resistor 175, a conductor 176, and a resistor 177 to ground. The conductor 176 is connected, through a resistor 178 to a synchronizing-signal bus SS, from which the electronic timer-control apparatus derives its initial controlling-impulses.

An arrangement is made, whereby the synchronizing-signal bus SS may be short-circuited in the event of conditions requiring arc-suppression in the rectifier-tubes 1 to 12 of Fig. 1. In the event of an arc-suppression operation, the reset-relay 31X of Fig. 1 is energized, and closes a make-contact 180, which short-circuits the synchronizing-signal bus SS, as indicated in both Fig. 1 and Fig. 2. The synchronizing-signal bus SS may also be shorted by a manually controlled switch 181, as shown in Fig. 2, or by a make-contact RP*a* of a relay of the same designation, which will be subsequently described.

The electronic timer-control apparatus of Fig. 2 comprises two time-base equipments, comprising tubes T2 to T5 and T2′ to T5′, respectively, operating under the control of the synchronizing-signal bus SS, and serving to produce, respectively, a long and a short saw-tooth wave, in output-circuits marked STL and STS, respectively. These saw-tooth waves are used to energize a group of electronic devices, or so-called electronic switches, whose contacts can be made to close and open, or open and close, at definite times, and for definite intervals, on a repetitive basis.

The various tubes of the electronic equipment of Fig. 2 have their plate-circuits energized from a bus marked +250, while some of their cathode-circuits are connected to a grounded bus marked GND. The plate-circuit supply is obtained from a very accurately controlled voltage, which is simply indicated, in Fig. 2, as a plate-battery 182, although an elaborately controlled plate-voltage source is actually used, the details of which are not necessary to an understanding of the present invention. Some of the grid-circuits of the tubes shown in Fig. 2 are biased from an accurately controlled grid-bias bus, marked —150, which is energized from an accurately controlled voltage-source, which is diagrammatically indicated by means of a bias-battery 183 in Fig. 2.

The long-period time-base equipment T2 to T5 of Fig. 2 has a pentode T2, whose control-grid (or simply grid) is controlled through a voltage-divider 184, 185, and 186, which is connected between the synchronizing-signal bus SS and the grid-bias bus —150. The last element 186 of this voltage-divider is preferably a potentiometer, for the purpose of varying the amplitude of the negative signal which appears at the plate of the pentode T2, as will be subsequently described. The suppressor of the pentode T2 is connected to the cathode, and the screen is connected to the plate-supply bus +250 through a resistor 187. The plate of this pentode is connected to the plate-supply bus +250 through a plate-resistor 188.

The pentode T2 is normally biased to cutoff. If a sufficiently large positive synchronizing-signal is applied from the sixty-cycle peaking-transformer 172 to the grid of this tube, the tube becomes conducting and a corresponding negative signal appears at the plate, due to the voltage-drop in the plate-resistor 188. If a negative signal is applied to the grid, the tube still remains in its cutoff condition. Hence, this tube operates to produce a negative peak, or a voltage-dip signal, at its anode, with an amplitude which is variable by the potentiometer 186.

During the normal cutoff condition of the pentode T2, its plate-voltage is +250 volts, the same as the plate-voltage bus +250. This plate-voltage of the pentode T2 is applied, through a voltage-divider 190, 191, which applies a normal voltage of, say, +150 volts to the first grid of a double-triode cathode-follower tube T3. Hence, the cathode of the cathode-follower tube T3 is normally held at +150 volts, of which about 3 volts appears across a cathode-resistor 192, and about 147 volts appears across a serially connected cathode-capacitor 193, the latter being shunted by a high resistance 194.

If, now, a negative signal appears on the plate of the pentode T2, this is attenuated and applied, as a negative pip, to the first grid of the cathode-follower T3, through the voltage-divider 190, 191. This causes a corresponding drop in the cathode-voltage of the cathode-follower

tube T3. However, the cathode-capacitor **193** is charged to about 147 volts, and hence the cathode-voltage cannot instantly drop below this value of about 147 volts. Hence, the cathode-drop is limited to a fixed value of about three volts, which is the proper amount for triggering the following stage of the equipment. It is to be noted that this negative trigger of about three volts is independent of the magnitude of the signal which is given by the sixty-cycle peaking-transformer **172**.

The second section of the cathode-follower tube T3 is connected as a diode, that is, with its grid connected to its plate. The two cathodes of this tube are connected together, so that the second plate of the tube is normally at +150 volts, corresponding to the normal cathode-voltage. This plate-voltage is tied to the plate of the next tube, T4.

This tube T4 is a pentode, which is connected as a phanastron sweep-generator of a type which is similar, in principle, to that which is discussed in the M. I. T. Radiation Laboratory Series, vol. 19, pages 195–204. The plate of the phanastron tube T4 is connected to the plate-voltage bus +**250** through a plate-resistor **195**. The cathode is connected to the grounded bus GND. The screen is connected to the plate-voltage bus +**250** through a resistor **196**. The suppressor-circuit **197** is connected to the screen through a resistor **198**. The suppressor-circuit **197** is also connected to the negative bus —**150** through a variable resistor **199**.

The plate of the phanastron tube T4 is connected to the first grid of a double-triode cathode-follower tube T5. The first cathode of this cathode-follower tube T5 is connected to the grounded bus GND through a cathode-resistance **204**, and it is connected to the grid of the phanastron tube T4 through a timing-capacitor **205**. The grid of the phanastron tube T4 is connected to the suppressor-circuit **197** of this tube through a high-resistance circuit consisting of a resistor **206**, a conductor **207**, and a resistor **208**. The conductor **207** is connected to the slider of a potentiometer **209** which is connected between the positive bus +**250** and the grounded bus GND, and which normally holds the phanastron grid slightly positive with respect to the cathode, which is at ground potential. The grid is about 80 volts positive with respect to the suppressor-circuit **197**, but negative with respect to the first cathode of the cathode-follower tube T5, so that the timing-capacitor **205** is normally charged to a value which may be about 150 volts, so as to present its negative terminal to the phanastron grid.

The suppressor-circuit **197** of the phanastron sweep-generator T4 is normally set so as to cut off the plate-current, so that the screen gets all of the current, and hence the screen-voltage is depressed by the voltage-drop in the screen-resistor **196**. When the three-volt negative pulse appears on the cathode of the preceding cathode-follower tube T3, it is transferred to the plate of the phanastron T4 through the diode section of the preceding cathode-follower tube T3. This causes the plate-voltage of the phanastron T4 to fall, and also the grid-voltage of the first section of the tube T5. The corresponding cathode of this tube T5 also falls, by cathode-follower action. Since the timing-capacitor **205** cannot discharge immediately, the drop in potential is transferred to the grid of the phanastron T4. This reduces the amount of current drawn by the screen of the phanastron, and hence the screen-voltage rises. There is a regenerative action, because the screen is tied to the suppressor through the resistor **198**, so that the suppressor-voltage also rises. This causes a plate-current to flow in the phanastron T4, which further reduces the plate-voltage, because of the voltage-drop in the plate-resistor **195**.

This regenerative action continues, in the phanastron tube T4, until the plate-voltage drops very rapidly by a certain fixed amount of about five volts, in the illustrative example. The phanastron has now been triggered, and it subsequently operates according to its own law of action, until it resets itself, meanwhile being unaffected by any further triggering signals, because of the action of the diode section of the tube T3, until the completion of its resetting operation, which will be subsequently described.

At this time, the five-volt drop in the plate-voltage of the phanastron T4 is communicated to the first grid, and hence to the first cathode, of the cathode-follower tube T5. Since the charge on the timing-capacitor **205** cannot change instantly, this also causes a depression in the grid-voltage of the phanastron T4. This grid-voltage depression is sufficient to carry the phanastron-grid negative, with respect to the suppressor-circuit **197**, so that grid-current no longer flows, and the total plate and screen current is very low.

The timing-capacitor **205** now begins to discharge through the high resistance **206**, which serves as a timing-resistor for the timing-capacitor **205**. As the timing-capacitor **205** gradually discharges, the grid-voltage of the phanastron rises linearly with time, and the plate-voltage of the phanastron linearly falls. As this plate-voltage of the phanastron falls, the first cathode-voltage of the cathode-follower tube T5 also falls, following the phanastron plate-voltage. Since the first cathode of the cathode-follower tube T5 is tied to the phanastron-grid through the timing-capacitor **205**, it keeps the grid-voltage of the phanastron T4 from rising too rapidly. This feedback is such that the timing-capacitor **205** discharges linearly.

The above-described discharging-action of the timing-capacitor **205**, accompanied by a voltage-reduction on the first cathode of the cathode-follower tube T5, continues until the phanastron plate-voltage can go no lower. When this happens, the first cathode of the cathode-follower tube T5 can no longer hold the phanastron grid-voltage down. The phanastron grid-voltage then rises, increasing the total current drawn by the phanastron, but the phanastron-plate can draw no more current, and hence the phanastron-screen takes the increased current. This causes the screen-voltage of the phanastron T4 to fall, because of the voltage-drop in the screen-resistor **196**, and this in turn causes the suppressor-voltage to fall and to cut off the plate-current. The plate-voltage then immediately rises to its initial value of +150 volts, at which point it is held by the diode half of the preceding cathode-follower tube T3. This action takes place very rapidly, and results in a very rapid resetting of the entire system consisting of the tubes T2 to T5, holding the system in readiness to wait for the next synchronizing signal to repeat the process.

The high speed of resetting of the sweep-circuit generator T2 to T5 is brought about by the rapid recharging of the timing-capacitor **205** through the first section of the cathode-follower tube T5. Without this section, the timing-capacitor **205** would have had to recharge through the rather large plate-resistor **195** of the phanastron tube T4, and hence the retrace or the reset-curve of the saw-tooth voltage would be very slow.

The second section of the cathode-follower tube T5 is also connected as a cathode follower, with its grid connected to the first cathode of this tube. Thus, the second cathode of the cathode-follower tube T5 is directly connected to the long-period saw-tooth output-circuit STL, and it is also connected to ground through a cathode-resistance **216**. The second section of the cathode-follower tube T5 thus serves to isolate the output from the sweep-circuit, and it also provides a low-impedance source for the output-circuit STL.

The long-pulse saw-tooth generator, or sweep-generator, consisting of the tubes T2 to T5, with the output-circuit STL, has its circuit-constants adjusted, in the illustrated example, for a saw-tooth length or timing period of one second, or sixty cycles of a 60-cycle system.

There is also a second saw-tooth generator, or sweep-generator, consisting of the tubes T2′, T3′, T4′, and T5′,

and having a short-time saw-tooth output-circuit STS, in which the timing capacitor 205′ is of a different size, and also some of the resistances, are different, so that this second generator is set for a short time-base or saw-tooth-length of 75 milliseconds, or 4.5 cycles of a 60-cycle system.

It is desired that, when the operation is first started, the two time-base sweep-generators shall start simultaneously, in response to the same impulse from the sixty-cycle peaking transformer 172, as received on the synchronizing-signal bus SS.

It is also desired that, when the short-time-base sweep-generator T2′ to T5′ resets itself, it will wait until the long-time-base sweep-generator T2 to T5 resets itself. To this end, it is arranged that the long-wave generator T2 to T5, when it first begins its down-sweeping voltage which constitutes the saw-tooth wave, shall operate a contact which will short-circuit the synchronous-wave bus SS, as indicated by the relay-contact RP*a*, which will be subsequently described.

It is further desirable to be able to change the length of the long saw-tooth-wave which is generated by the long-time-base generator T2 to T5, so that the pulse-repetitions do not need to occur at the rate of one per second, but may occur at shorter time-intervals, down to intervals of, say, one-eighth of a second. To this end, the long-period saw-tooth generator T2 to T5 is provided with a circuit 218 which connects the phanastron suppressor-circuit 197 to the negative bus −150 through a relay make-contact RP*b*, which will be subsequently described.

In other respects, the two sweep-generators T2—T5 and T2′—T5′ are similar, so that a description of one will suffice for both.

Fig. 2 also shows simplified representations of certain electronic switches which are operated or controlled by the two saw-tooth wave-circuits STL and STS. Each electronic switch could consist of simply a tube or tubes, the conductive operation of which would correspond to a switch or relay contact-closing operation, while the blocking of the tube or tubes would correspond to a contact-opening operation. However, in the actual application of our invention which has been chosen for illustration in Figs. 1 and 2, the various electronic switches consist of very fast, tiny, electronically controlled, electromagnetically operated relays—for example, relays having tiny mercury-switch contacts, which have been schematically indicated as ordinary relay-contacts, as it is theoretically possible to use any kind of relay-contact which can be closed and opened with sufficient rapidity, perhaps something like three or four milliseconds, or less, if possible. By way of contrast, it may be noted that these electronic switch-operating times are something like 500 times longer than the few microseconds which are required to short-circuit the direct-current power-line RA—RB by means of the grid-controlled protector-thyratrons 1P to 4P in Fig. 1.

Since all of the electronic switches in Fig. 2 are alike, except for their potentiometer-adjustments, and with other exceptions which will be noted, a description of one will suffice for all.

The long-base time-wave circuit STL controls two electronically operated repetition-period control-switches, having electromagnetically controlled relays which are marked RP*a* and RP*b*, respectively. Each of these electronic relays has its own double-triode cathode-follower tube T, having the two cathodes connected together, and connected to the negative bus −150 through a cathode-resistor 220. The first anode of each of these tubes T is directly connected to the positive bus +250, while the second anode is connected to said positive bus through the operating coil RP*a* or RP*b* of its associated electromagnetically operated repetition-period relay, as the case may be.

The first grid of each of these two long-base-control tubes T of these electronic switches RP*a* and RP*b* is connected to the long-base control-circuit STL. The second grid of each of these tubes is connected, through a grid-resistor 221, to an adjustable point on its own potentiometer 222, which determines the voltage-point, on the saw-tooth input-wave, at which the tube will become conductive, so as to energize its associated relay-coil. The potentiometers 222 of the two electronic switches which are controlled by the long-base saw-tooth circuit STL are energized from potentiometer-buses HP11 and HP12, which are respectively connected to the positive bus +250 and to the grounded bus GND, through separately adjustable resistors 231 and 232, respectively.

The tube T of each electronic switch starts with its first grid, and hence its cathodes, at the initial or highest value of the saw-tooth sweep. As the saw-tooth voltage drops, the cathode-voltage drops with it. Nothing happens until the cathodes drop to a voltage which is approximately the same as the potentiometer-setting of the second grid, at which point the second plate begins to carry current, thus energizing the associated electromagnetically operated relay-coil, such as RP*a* and RP*b*, as the case may be.

When the sweep-voltage reaches its lowermost value and resets, the second plate-current of the tube T cuts off very rapidly, so rapidly that a high voltage is induced in the coil of the relay. To retard the decay of current and reduce this induced voltage to a reasonable value, it is usually desirable to connect the second plate of each tube T to the grounded bus GND through a small damping-capacitor 233 and a damping-resistor 234.

The output of the second time-base equipment T2′ to T5′ is arranged so that the short-base saw-tooth control-circuit STS controls five electronic switches, which are arranged, in Fig. 2, in the chronological order of their operation. In this case, the potentiometers 222 of these five switches are energized from their own potentiometer-buses HP1, HP2, which are excited by separately adjustable resistors 241 and 242, similar to the adjustable resistors 231 and 232 for the long-base potentiometer-buses HP11 and HP12.

In the order of their operation, the five short-base electronic switches consist of two pulse-start switches PS*a* and PS*b*, a first pulse-length switch PL*a*, a so-called bias-control switch BC, and a second pulse-length switch PL*b*. In each case, the designation which is used for the electromagnetically operated relay-part of the electronic switch is also used as the name to designate the entire electronic switch. The bias-control designation BC is a misnomer, so far as is shown in the very much simplified diagram of Fig. 2, arising from the fact that certain other functions, not here shown, and not necessary to an understanding of the present invention, are also performed by the bias-control switch BC in the actual apparatus in which the present invention was used.

The pulse-start relay PS*a* of Fig. 2 has a make-contact, which is also designated as PS*a*. The other pulse-start relay PS*b* has a back-contact, designated PS*b*. These two contacts are connected in series with each other so that a circuit is made under the control of the *a* contact and broken under the control of the *b* contact. Together, the two pulse-start relay-contacts PS*a* and PS*b* perform the function which is represented, in Fig. 1, by a single pulse-starting contact PS.

In like manner, the two pulse-length relays PL*a* and PL*b*, in Fig. 2, have serially connected make and break contacts PL*a* and PL*b*, respectively, for performing the function which is designated simply as a pulse-length contact PL in Fig. 1.

In the case of the electronic switches PS*b* and PL*b*, which have back-contacts in series with make-contacts of switches PS*a* and PL*a*, respectively, in Fig. 2, it is desired to slightly delay the drop-out time of these switches. During the resetting instant, when the saw-tooth wave is resetting itself, it is desired that the *b*

contact should not reclose as a result of the deenergization of the *b* relay, before the *a* contact reopens as a result of the deenergization of the *a* relay. In this way, we avoid the momentary reclosure of the circuit containing the serially connected contacts *a* and *b*, when the corresponding relays *a* and *b* are simultaneously deenergized. To this end, it is desirable to provide the electronic switches PS*b* and PL*b*, in Fig. 2, with an additional time-delaying circuit whereby the second plate of the tube T is connected, through a resistor **243**, to the slider of a potentiometer **244** which is energized between the buses +**250** and GND. This time-delaying circuit cooperates with the damping-capacitor **233** to delay the drop-out times of the *b* relays PS*b* and PL*b* very slightly, such as by a matter of some three or four milliseconds.

The electronic timer-control equipment of Fig. 2 also includes three time-switch relays TSA, TSB, and TSC, and three auxiliary time-switch relays TSA1, TSB1, and TSC1, which are energized from a direct-current station-bus, which is indicated at (+) and (—). These time-switch relays can be put into service by the closure of a manually operated positive-circuit switch **249**, which energizes an auxiliary positive bus **251**.

After the closure of the bus-switch **249**, the operation of the various time-switches from TSA to TSC1 is first started off by the closure of the electronic bias-control relay-contact BC. This BC-contact energizes a circuit **252** from the auxiliary positive bus **251**, and this circuit continues, through a back-contact **253** of the second time-switch relay TSB, a circuit **254**, and a back-contact **255** of the first time-switch relay TSA, to a circuit **256** which energizes the positive terminal of the operating coil TSA1, the negative terminal of which is connected to the negative bus (—). The auxiliary time-switch relay TSA1 immediately picks up and closes its make-contact which connects the negative terminal of the coil TSA to the circuit **256**. The positive terminal of the coil TSA was already connected to the auxiliary positive bus **251**, through the back-contact **257** of the second time-switch relay TSB.

However, the TSA coil is not immediately energized, because it is short-circuited by the circuit containing the contacts BC, **253** and **255**. Hence, during the very first pulse of the electronic timing equipment of Fig. 2, the time-switches TSA, TSB, and TSC do not come into play, remaining deenergized. However, on all subsequent pulses of the electronic timing equipment, the time-switches TSA, TSB, and TSC successively come into play, as will now be described.

At the end of the first short-period saw-tooth wave, the BC electronic switch is deenergized, thereby opening its make-contact BC in the circuit between the auxiliary positive bus **251** and the conductor **252**. This removes the short-circuit from across the operating coil TSA, so that the two operating coils TSA and TSA1 are now connected in series, in a circuit containing the TSB back-contact **257**. This energizes the first time-switch TSA, opening its back-contact **255**, and closing its various make-contacts. In this way, the time-switch make-contact TSA, which is shown in Fig. 1, is closed, so as to make a connection between the circuits **57** and **F1** of Fig. 1.

Ordinarily, the electronic timing-equipment of Fig. 2 is put into operation, as by the closure of the positive-bus switch **249**, for some two seconds (or more) prior to the activation of the rectifier-tubes **1** to **12**, as by the closure of the control-circuit switches AB1 to AB4. This allows time for the various tube-filaments to heat up, time for the first time-circuit pulse to have passed, and time for other functions that need not be here described.

Let us assume, now, that the rectifier control-circuits are energized, and that the first time-circuit pulse, which thereafter activates the rectifier-tubes **1** to **12**, occurs at a time when the time-switch TSA is already in its energized condition. The end of the preceding long-base pulse of the saw-tooth control-circuit STL has deenergized the repetition-period switch RP*a*, thus removing the RP*a* short-circuit from the synchronizing-signal bus SS, as will be more fully described after the description of the circuit-connections has been completed. The energized time-switch TSA will have its top contact TSA closed, in the peaking-transformer secondary-circuit SA at the top of Fig. 2, thereby selecting phase A of the supply-circuit as the phase for supplying a synchronizing-pulse to the electronic timing-equipment of Fig. 2.

When this phase-A synchronizing-pulse comes, the short-base saw-tooth wave commences another downward sweep, and the electronic switch BC is again energized, at a certain point in this sweep, but only after a power-voltage pulse has been started in the power-line RA—RB of Fig. 1, as will be subsequently described.

Continuing our description of the time-switch control-equipment near the bottom of Fig. 2, it will be noted that this closure of the BC switch-contact again energizes the circuit **252—253—254**, and this circuit is now continued through a TSA make-contact **258**, which energizes the operating coil TSB1 of the auxiliary time-switch TSB1, which in turn completes a circuit to the TSB coil, in a manner similar to that in which the TSA1 relay completed a circuit to the TSA coil, the circuit of this TSB coil being completed through a TSC back-contact **259**. The TSB coil is at first short-circuited by the circuit containing the switch-contact BC, so that the TSB coil does not become energized until the end of the short-period saw-tooth pulse which has been holding the electronic switch BC closed. The TSB coil is thereupon energized, and its back-contact **257** deenergizes the TSA coil, so that the first time-switch TSA is now deenergized, and the second time-switch TSB now stands energized, in readiness for the next power-pulse. The energization of the second time-switch TSB also opens its back-contact **253**. The TSB switch also closes a make-contact **261** which connects the positive terminal of the coil TSC1 to the circuit **252** in readiness for the next operation of the electronic switch BC.

The next saw-tooth pulse of the electronic equipment starts a power-voltage pulse under the control of the time-switch TSB, and after this power-pulse has been started, the electronic switch BC again closes, and energizes the operating coil of the auxiliary time-switch relay TSC1 through the TSB make-contact **261**. The closure of the auxiliary relay TSC1 establishes a circuit for the TSC coil, which contains a back-contact **262** of the first time-switch relay TSA, but this TSC coil is at first short-circuited by the circuit containing the BC contact, that is, before the BC contact opens. When the BC contact opens, at the end of the short-base saw-tooth pulse, the time-switch relay TSC is energized, thereby conditioning the circuits for the beginning of the next voltage-pulse on the power-line RA—RB of Fig. 1. The closure of the relay TSC opens its back-contact **259**, which deenergizes the coil of the time-switch relay TSB, and the time-switch relay TSB, upon deenergization, recloses its back-contacts **253** and **257**, and reopens its make-contact **261**, thereby resetting the time-switch control-circuits of Fig. 2, in readiness for a repetition of the operation.

Thus, after the time-switch TSC has controlled the initiation of another power-voltage pulse on the power-circuit of Fig. 1, the electronic switch BC again closes, while the power-pulse is still in progress, and this time, the BC contact energizes the auxiliary time-switch relay TSA1, through the circuit **252—253—254—255—256**. This auxiliary relay TSA1 again picks up, but again nothing happens until after the opening of the electronic switch BC, at which time the first time-switch TSA is again energized, and by opening its back-contact **262** it deenergizes the third time-switch relay TSC, thereby conditioning the time-switch circuits for another power-pulse, in which the time-switch TSA will be in control at the moment of starting of the power-pulse.

Before starting a description of the operation of the apparatus shown in Fig. 1, it will be helpful to make a brief reference to the operation of the electronic circuits of Fig. 2, with the aid of the time-curves which are shown in Fig. 3.

At the beginning of the operation, the voltages of the saw-tooth output-circuits STL and STS of both the long-period and short-period time-base equipments in Fig. 2 are at their maximum value of +150 volts, as indicated in Fig. 3. At a moment **270** indicated by the first synchronizing signal SS–A, in Fig. 3, both saw-tooth waves are triggered off, so that the voltage quickly drops to 145 volts, as indicated by the point **271** in Fig. 3. After this, the two saw-tooth voltage-waves continue to fall, at different slopes, as indicated by the slanting lines marked STS and STL in Fig. 3. The short-time saw-tooth wave STS completes its downward sweep, to its lowermost voltage, which may be 100 volts, as marked, in a time of .075 second, or 4.5 cycles of a 60-cycle system, until the point **272** is reached, at which time the short-base saw-tooth voltage practically instantly rises to its initial value of +150 volts, as indicated at 273.

Meanwhile, the long-base saw-tooth wave STL, starting from the same point **271**, continues its more gradual downward sweep, and, if it were uninterrupted by the second repetition-period switch RP*b*, it would continue on to its lowermost voltage, such as 100 volts, at the point **274**, in a time-period which is indicated as one second or sixty cycles of a 60-cycle wave. If the long-base saw-tooth wave STL is permitted to reach this extreme lowermost point **274**, it substantially instantly resets to its original voltage-value of 150 volts, as indicated by the point **275** in Fig. 3.

At an early point in the downward sweep of the long-base saw-tooth wave STL, and if desired, even before this wave completes its first five-volt drop to the point 271, the first electronic switch RP*a* triggers, as indicated by the point RP*a* in Fig. 3. Next, in time-sequence, come the triggering of the electronic switches PS*a*, PS*b*, PL*a*, BC, and PL*b*, at successive points along the short-base saw-tooth wave STS, as indicated, by way of example, in Fig. 3.

It will be recalled, from the description of Fig. 2, that when the first repetition-period switch RP*a* closes, it short-circuits the synchronizing-signal bus SS, so that no more synchronizing signals can be received over this synchronizing-signal bus until the release of the switch RP*a*, which occurs at the moment when the long-period saw-tooth signal STL resets itself. Thus, when the short-period saw-tooth signal STS resets itself at 272—273, in Fig. 3, it is not triggered off, to commence another short-period saw-tooth wave, until after the long-period wave resets itself, so that both saw-tooth waves can then be retriggered at the same moment.

At some point during the downward sweep of the long-base saw-tooth wave STL, in Fig. 3, the second repetition-period switch RP*b* is triggered, at some such point as indicated at RP*b* in Fig. 3, just by way of giving an example. The effect of the closure of the electronic switch RP*b*, in Fig. 2 is to interrupt the discharging of the timing-capacitor **205** in Fig. 2, so that the long-base phanastron tube T4 immediately resets itself, so that the output-voltage, which appears on the long-base output-circuit STL of Fig. 2, rises substantially immediately to its initial voltage-value of +150 volts, as indicated by the point **276** in Fig. 3. During the resetting process of this long-base saw-tooth wave STL, the electronic switches RP*a* and RP*b* reopen, so that the switch RP*a* removes its short-circuit from the synchronizing-signal bus SS of Fig. 2.

Meanwhile, the time-switch group, which is shown near the bottom of Fig. 2, has reset itself, so that the time-switch TSA is no longer closed, but the time-switch TSB is closed. In Fig. 2, it will be seen that the top contact of the time-switch TSB, near the top of Fig. 2, now selects the supply-phase B of the 60-cycle supply line, for furnishing the peaking-transformer peak which will be applied to the synchronizing-signal bus SS in Fig. 2.

Thus, in Fig. 3, when the first positive peaking-transformer peak occurs on the synichronizing bus of Fig. 2, after the point **276** in Fig. 3, a timer-triggering pulse will be received, at the point marked SS–B, at which time the two saw-tooth waves STS and STL will start down again, in a repitition of their timing operation.

It will be understood that each of the electronic switches has a millisecond adjustment, under the control of its grid-circuit potentiometer **222** of Fig. 2, so that it can be made to respond at any desired voltage-point, and hence at any desired time-point, along the saw-tooth wave which controls that particular switch.

While we have shown an exemplary electronic timer-control, as shown by Figs. 2 and 3, we wish it to be understood that any other type of relaxation-oscillator saw-tooth generator could have been used, or any other types of switches which are responsive to the voltages of the saw-tooth waves, or in fact other types of grid-bias controlling-equipment for the grid-circuits of the firing-tubes, such as the firing-tube FT1, for the rectifier assembly, or for any other equipment for controlling the application of power to the direct-current power-line RA—RB in Fig. 1. It is believed, however, that the operation of our invention will better be understood by the inclusion of a showing of some precise, concrete circuit in which our invention is applied, and for which it was primarily designed and intended, as has been done in Figs. 1 to 3, although, of course, our invention is not limited to the precise circuit or application which has been chosen for illustration.

The effect of the electronic timer-control of Figs. 2 and 3 on the power-tubes or rectifier-tubes **1** to **12** of Fig. 1 is described and claimed in considerable detail in the companion Hagensick application. In brief, a succession of short power-pulses, with relatively long intervals in between, are applied to the power-line RA—RB of Fig. 1 by suitable control of the rectifiers which constitute the direct-current voltage-source. Successive power-pulses are started at predetermined points in successive phases of the three-phase power-supply bus **13**, under the control of the top contacts of the three time-switches TSA, TSB, and TSC of Fig. 2. The power-pulses are started by the pulse-start switch-contact PS in Fig. 1, which is the same as the two serially connected contacts PS*a* and PS*b* in Fig. 2. This applies a very brief positive biasing-impulse from the bias-source **45**—**46** of Fig. 1 to the firing-control circuits, such as F1 to F4, of four consecutively numbered rectifiers, so as to start the power-pulse with a gradual buildup of voltage.

After this, and while these first four rectifier-tubes are still firing, the pulse-length contact PL of Fig. 1 is closed, which is the same as the two serially connected contacts PL*a* and PL*b* in Fig. 2. As long as the PL contact of Fig. 1 remains closed, or until the PL*b* contact of Fig. 2 opens, the bias of all of the rectifier firing-tubes is made more positive, by connecting the conductor **58** of Fig. 1, through the resistance **63**, to the positive terminal **64** of the negative-bias potentiometer **47**. Consequently, during this period, all twelve of the rectifier-tubes are firing, in their proper order, and power is being delivered to the power-line RA—RB. When the pulse-length contact PL (or PL*b*) is opened, a blocking bias is again applied to the grid-circuits of the firing tubes (such as FT1) for all of the rectifiers, so that only the four rectifier-tubes which were fired at that particular moment will continue to carry current, until their total voltage becomes zero and they stop conducting. The equipment then waits for whatever period is set by the repetition-period electronic switch RP*b* of Figs. 2 and 3, at which time a new pulsing-operation is obtained.

In accordance with our present invention, in the form of embodiment which is shown in Fig. 1, a plurality of protector-ignitrons are shown, as indicated at 1P to 4P

which are characterized by having two parallel-connected protector-ignitron circuits, one of which may be the circuit consisting of the serially connected protector-ignitrons 1P and 2P, while the other, or parallel-connected, circuit consists of the protector-ignitrons 3P and 4P.

A characteristic feature of our invention is that the protector-tubes are ignitrons, as distinguished from hot-cathode tubes, for example. Ignitrons are unique in being able to safely carry extremely heavy short-circuit currents for brief periods of time. We believe that as great reliance could not be placed upon the firing of the protector-ignitrons by the process of applying firing-currents to their ignitors, because the initiation of an arc by means of the ignitors takes far too long a time for our present purposes, and this time is subject to a considerable range of random variation.

A characteristic feature of our invention is, therefore, that the protective ignitrons 1P to 4P are pre-fired, or held in a condition of readiness to produce an arc from the main anode to the pool-type cathode, by first firing the ignitor, and establishing an exciting or holding-arc on a suitably energized exciting-anode. When the tube is in this partially excited condition, with its control-grid blocked, so that the tube itself cannot fire, it is possible, by unblocking the grid, to establish a heavy-current-carrying main-arc in only a very few micro-seconds, which is a smaller period of time than is required by any other known means for establishing such a heavy-duty short-circuiting current.

When the power-line RA—RB remains energized, or may remain energized, for any length of time as long as four or five cycles of a 60-cycle supply, as in Fig. 1, or even for somewhat shorter times, it is not altogether safe to leave a holding-arc playing on an auxiliary anode, inside of an ignitron, because of the danger of the holding-arc climbing out of the cathode-pool and up onto the side walls of the tube.

Accordingly, it is an important part of our invention, in the form illustrated in Fig. 1, that the ignitors of the two parallel-connected protector-tubes, such as the ignitors I–1P and I–3P of Fig. 1, shall be alternately impulsed or fired, on alternate half-cycles of the alternating-current supply-source 13 for the rectifiers. The exciting-anodes A–1P and A–3P of these two protector-ignitrons are fired with a sustained voltage which is obtained from two successive phases which are derived from the alternating-current supply, so that each exciting-anode carries its exciting-arc for a little more than 180° at a time, so that there is a certain overlapping-period in the times when an exciting-arc is being carried in one or the other of the parallel-connected protector-tubes 1P and 3P. Thus, at least one of these parallel-connected protector-tubes, or tube-circuits, always stands in readiness to carry a short-circuiting current in response to a grid-release of the protector-tubes.

Our apparatus requires a suitable form of quick-acting fault-detection means, which is capable of applying a strong positive-bias impulse to the control-grid circuits of the protector-ignitrons in as short a time as possible, such as a time-period of the order of one or two microseconds. Our apparatus, as shown in Fig. 1, involves a novel kind of detector-means which is admirably suited to this end, referring to the two detector-tubes D1 and D2, which are fired in response to a current of fault-magnitude, flowing through one or the other of the ballast-resistors BR1 and BR2 which are connected in series with the respective load-devices L1 and L2.

When one of the detector-tubes D1 or D2 fires, in Fig. 1, in response to a load-fault, it sends out a pulse, in the control-circuit CQP and CQN, which is transmitted through the insulating transformers 141 and 123, so that this fault-indicating pulse is applied to the grids of the grid-release thyratron GR, so as to instantly release this thyratron. Said grid-release thyratron GR thereupon applies the positive bias 113—114 to the common grid-circuit conductor GP1 of the grid-circuits G–1P and G–3P of the two parallel-connected protector-tubes, so that whichever protector-tube is carrying an exciting arc at that moment will be instantly fired, not more than several microseconds delay after the occurrence of the load-fault, so as to short-circuit the direct-current power-line RA, RB.

When the grid-release tube GR fires, and applies the positive bias 113—114 between the circuits PR1 and GP1, it also sends a current-flow in the negative-bias branch which contains the current-limiting resistor 110 and the negative bias 111—112. This increased current-flow through the resistor 110 energizes the parallel-connected reset-relay RR, which, in due time, picks up momentarily, long enough to open its back-contact RR in the plate-circuit of the grid-release thyratron GR, thus resetting this thyratron for another fault-responsive operation, in response to the next load-fault.

The ballast-resistances BR1 and BR2, even aside from their cooperation with the detector-tubes D1 and D2, constitute an important feature of our invention, as they prevent the power-line voltage from being pulled down below a minimum value of the order of 100 or 150 volts, or whatever voltage is necessary to initiate a main arc, or short-circuiting arc, in the protector-tube or tubes, at the moment when one of the load-devices L1 or L2 is in a short-circuited condition. If it were not for these ballast-resistors BR1 and BR2, the short-circuit current which would be drawn by one of said load-devices, when it is in its short-circuited condition, would be sufficient to pull down to the power-line voltage to zero, or so close to zero that the protector-tubes would not reliably fire, upon the release of their control-grids. In normal operation, the power-line RA—RB may carry a high voltage, such as 2000 volts, or higher.

Other features of our invention, in the form of embodiment which is shown in Fig. 1, involve the prompt suppression or quenching of the arcs in the main power-supplying rectifier-tubes 1 to 12, thus imposing an impediment against the energization of the power-line RA—RB. When the output-terminals RP1 and RN2 of a rectifier are short-circuited, it is desirable to arc-quench the fault-currents very rapidly, in order to minimize the duty on the rectifier-ignitrons, and to prevent arc-backs, particularly where the load short-circuits occur very frequently, sometimes as often as once per second, as in the illustrated application of our invention, in Fig. 1.

Our apparatus, as shown in Fig. 1, shows three arc-quenching means, which are associated with the operation of the fault-detectors and the firing of the protector-tubes 1P to 4P. Thus, the fault-detector tubes D1 and D2 produce a fault-indicating impulse in the circuit CQP, CQN, which triggers the arc-suppressor tube A, which in turn applies a negative blocking-bias 69—70 to the grids of all of the firing-tubes (such as FT1) of the twelve power-supplying rectifier-ignitrons 1 to 12, thereby quenching or suppressing the rectifier-arcs by preventing the firing of any more rectifier tubes, other than the four consecutively numbered tubes which were firing at the moment of arc-suppression, so that these four tubes will cease firing as soon as the total of their impressed voltages becomes zero, thus imposing an impediment against the energization of the power-line RA—RB.

A second arc-suppression means, in Fig. 1, is directly responsive to the flow of a short-circuiting current through the protector-tubes, at which time the impulse-transformer 80 will energize the control-circuit JQP—JQN, which also triggers the arc-quench tube A, the operation of which has just been described.

A third protector-tube-responsive arc-quenching means, in accordance with our invention, is also shown in Fig. 1, in the form of a circuit which is responsive to the successful maintenance of exciting or holding-arcs, first in one tube and then the other, of the pair of protector-tubes 1P and 3P. This particular protective means has to do,

not so much with the problem of responding to a fault, or a short-circuit current, once that condition has been obtained, but rather with the problem of recognizing the paramount importance of having a protective means available at all times, and shutting down the entire operation in the event of a condition in which a protective means is not available for protecting the load-devices L1 and L2 in case either one should experience a flash-arc or other short-circuited condition. Reference is made to the holding-anode-circuit transformers 101 and 102, in Fig. 1, which energize the control-circuit PR1—PB1, and the insulating transformer 103, and thus energize the rectifier-bridge 153 which applies a negative or blocking bias to the control-grid of the arc-suppressor tube C, so as to prevent that arc-suppressor tube C from firing (in response to the positive grid-bias 165), only so long as the exciting-anode circuits A–1P and A–3P are alternately firing in their proper manner.

When two pairs of parallel-connected protector-tubes are used, as shown in Fig. 1, both pairs are thus protected, so that if either pair fails to maintain an exciting anode in at least one tube of the pair at all times, there will be a release of the control-grid of the arc-quenching tube C, and the arcs will be quenched or suppressed in the rectifier-tubes 1 to 12, thus imposing an impediment against the energization of the power-line RA—RB, in the manner already described.

Our invention is not limited, of course, to the precise form of utilization or embodiment, which is shown in Fig. 1. The more general principles of our invention will be better understood by reference, also, to two alternative forms, as shown in Figs. 4 and 5 respectively.

Fig. 4 shows a modification in the apparatus of Fig. 1, involving several different or alternative features. Only a single protector-tube 1P is shown, instead of a pair of alternately pre-fired protector-tubes 1P and 3P as in Fig. 1. It is assumed that this single protector-tube 1P of Fig. 4 has a sufficient voltage-standing ability so that it is not required to have a second protective tube in series with it, such as the protector-tube 3P in Fig. 1.

In Fig. 4, it is assumed that a succession of short power-impulses will be used on the direct-current power-line RA—RB, and that these power-impulses will be of a sufficiently short duration, so that an exciting or holding-arc can be held on the exciting-anode A–1P of the protector-tube 1P all the time throughout the duration of the power-pulse. Just before it is desired to start the power-pulse, the ignitor I–1P of the lone protector-tube 1P is fired. In Fig. 4, the means for accomplishing this ignitor-firing of the protector-tube is, or may be, the pulse-start switch PS of Fig. 1, which, in this case, does not actually start the power-pulse, but starts the firing of the ignitor of the protector-tube 1P. The pulse-start switch PS of Fig. 4 is used to apply a positive grid-bias 280 to the grid of a firing-tube or thyratron 281, which fires the ignitor I–1P through a sloping inductance 282, from a firing-capacitor 283 which is charged from a full-wave rectifier 284, through a linear reactor 285 and a resistor 286.

The cathode-spot which is started by the ignitor I–1P is picked up by the excitation-anode A–1P in Fig. 4, which thereupon causes a discharge from a capacitor 287, through resistors 288 and 289. This excitation-anode capacitor 287 is charged from a double-wave rectifier 290, through a linear reactor 291 and a resistor 292. This capacitor 287 maintains current through the excitation-anode A–1P until, or slightly after, the end of the power-pulse.

The exciting-anode resistor 288 is shunted by an insulating transformer 293, in Fig. 4, which applies a positive grid-releasing voltage to the grid of a thyratron 300. The plate-circuit of the thyratron 300 is under the control of a pulse-length switch PL, which may be similar to the pulse-length switch PL in Fig. 1, except that here, in Fig. 4, the pulse-length switch is used to initiate the firing of the rectifier-tubes 1 to 12, thus initiating the power-pulse which is applied to the power-line RA—RB. The plate-circuit of the thyratron 300 includes a suitable plate-voltage source 301 and a resistor 302, so that, when the thyratron 300 is firing, it develops a voltage-drop in the resistor 302, which can be used as a positive or grid-firing voltage in the grid-circuit or circuits of the rectifier-firing tubes, such as FT1.

It will be noted that the thyratron 300 cannot fire, until its grid-circuit is released in response to the flow of an arc-maintaining current in the excitation-anode A–1P of the protector tube, and even when this occurs, the firing of the thyratron 300 must await the closure of the pulse-length switch PL. This interval of waiting, before the closure of the pulse-length switch PL, affords a time which will take up the random discrepancy in the lengths of time which are necessary to fire the protector-ignitron 1P, so that the power-pulse may start at a precise moment, which is controlled to the fraction of a millisecond, by the closure of the pulse-length switch PL. The power-pulse is terminated at a precisely controlled millisecond, by the opening of the pulse-length switch PL, or by the opening of the corresponding switch-element PL*b* in Fig. 2.

The thyratron 300 has a negative grid-circuit bias, which is taken from the slider 62 of the negative-bias potentiometer 47 which next follows the resistor 302 in the grid-circuit FG1 of the illustrated firing-tube FT1 in Fig. 4.

Fig. 4 also shows a modification, over Fig. 1, in the means for fault-detection, and in the connection and use of the reset-relay, and in the means for quenching the arcs in the power-rectifier in response to a grid-release of the protector-tube 1P.

Thus, in Fig. 4, the ballast-resistors BR1′ and BR2′ are connected at the negative terminals RB of the respective loads 1 and 2, rather than at the positive terminals RA, as in Fig. 1. The detector-tubes D1′ and D2′, in Fig. 4, are similar to the detector-tubes D1 and D2 of Fig. 1, and are similarly responsive to the voltage-drop in the ballast-resistors BR1′ and BR2′, with the exception, however, that since the ballast-resistors BR1′ and BR2′ are now connected to the negative load-circuit conductor RB, which is grounded, as shown at 303, the protector-tubes D1′ and D2′ of Fig. 4 are at substantially ground potential, thus eliminating the necessity for the insulating transformer 141 of Fig. 1, and thus reducing the pulse-transfer delay.

The cathodes of the detector-tubes D1′ and D2′ in Fig. 4 are connected to the grounded negative load-circuit bus RB through a cathode-resistor 304, and a negative-bias resistor 305, the latter being energized from a battery 306. The cathodes of the detector-tubes D1′ and D2′, in Fig. 4, are also connected to the grid-circuit G–1P of the protector-tube, through a grid-resistor 307, so that the entire grid-circuit G–1P consists of the resistors 307, 304 and 305. The plates of the detector-tubes D1′ and D2′ of Fig. 4 are connected to the grounded negative load-circuit bus RB through a positive-bias resistance 308, and the back-contact 309 of a reset-relay RR′, the positive-bias resistor 308 being shunted by a battery 310.

As an example of the various means for resetting which are possible, Fig. 4 shows the operating coil of the reset-relay RR′ as being energized from the terminals of the grid-resistor 307, through a rectifier 311, which may be used, if necessary, in order to prevent a negative bias on the grid G–1P from picking up the reset-relay coil RR′. If necessary for the purpose of providing pickup-delay, the operating coil RR′ of the reset-relay in Fig. 4 may have a series resistor 312 and a parallel-connected capacitor 313.

Fig. 4 also shows one of the various alternative means for the protection of the rectifier-tubes 1 to 12 when a fault occurs in one of the load-devices L1 or L2. To

this end, the cathode-resistor 304 is paralleled by the operating coil of a protective relay P. This protective relay P has a make-contact 314, which is used to apply a positive or grid-firing bias 315 to the grid of the arc-quench thyratron A, which may otherwise operate as shown in Fig. 1.

In the rectifier-equipment shown in Fig. 4, the sine-wave grid-firing transformer 44, in the grid-circuit FG1 of the firing-tube FT1, is shown as being energized from an auxiliary excitation-bus UX, UY, UZ, which is energized through a star-delta transformer 344 from the main excitation-bus X, Y, Z, so as to provide a grid-firing sine-wave having the same phase as is provided by the sine-wave impulsing-transformer 51—44 in Fig. 1.

In recapitulation of the operation of the form of our invention which is shown in Fig. 4, it may be noted that a holding-arc is first established in the protector-tube 1P, by the closure of the pulse-start contacts PS, before the rectifier-tubes 1 to 12 are fired. After a holding-arc has been established in the exciting anode A–1P of the protector-tube, and after information of this circumstance has been transmitted to the thyratron 300, through the transformer 293, the firing of the rectifier tubes is started, and later on stopped, by the closing and opening of the pulse-length contact PL, after which the excitation of the holding anode A–1P of the protector-tube is automatically interrupted by reason of the complete discharge of the capacitor 287.

In case a fault should develop in one of the load-devices L1 or L2, in the equipment shown in Fig. 4, one of the detector-tubes D1′ or D2′ is fired, and its plate-cathode current, flowing through the cathode-resistor 304, develops a positive bias which instantly releases the grid G–1P of the protector-tube 1P. At the same time, the reset-relay RR′ is energized, across the grid-resistance 307, and in due time this reset-relay picks up and opens momentarily, so as to interrupt the plate-current through the detector-thyratron D1′ or D2′ which has been fired. At the same time, also, the protector-relay P is energized, as a result of its connection across the cathods-resistor 304, and in due time, this protector-relay P picks up and closes its contact 314 in the grid-firing circuit of the arc-quench thyratron A, which quenches the arcs in all of the rectifier-tubes 1 to 12. There is not as much urgency about this arc-quenching operation, as there is in the grid-releasing operation of the protector-tube 1P, because the protector-tube 1P must be fully fired within at least ten micro-seconds, or as much shorter time as possible, or as may be desired, if the load-devices L1 and L2 are to be protected against the ruinous effects of frequent flash-arcs or other randomly occurring short-circuited conditions.

Fig. 5 shows a still further modification of the embodiment shown in Fig. 1, in regard to the releasing-circuit for the grids of the protector-thyratrons such as 1P and 3P. The modification shown in Fig. 5 omits the grid-release thyratron GR of Fig. 1, with its positive-bias source 113—114 and its reset-relay RR. Instead of these parts, the control-equipment of Fig. 5 applies the secondary voltage of the detector-pulse insulating-transformer 141′ directly in series with the negative-bias source 111—112, in lieu of the current-limiting resistor 110 of Fig. 1. In Fig. 5, the negative-bias source 111—112 is preferably shunted by a by-pass capacitor 348.

In the operation of the control-equipment shown in Fig. 5, the detector-pulse which is produced in the control-circuit CQP—CQN whenever there is a short-circuited condition in one of the loads L1 or L2, as described in Fig. 1, is now applied directly, through the insulating transformer 141′, as a serially connected grid-bias pulse which is in series with the negative or grid-blocking bias 111—112, so as to release the grids G–1P and G–3P of the parallel-connected protector-ignitrons 1P and 3P. The by-pass capacitor 348 expedites the application of this positive pulse to the control-grids of the protector-tubes, and it also reduces the magnitude of the grid-releasing pulse which has to be transmitted through the insulating transformer 141′.

An advantage of the control-equipment which is shown in Fig. 5, over that which is shown in Fig. 1, is that, when one of the detector-thyratrons D1 or D2 of Fig. 1 fires, in response to a load-fault, this is the only thyratron which must be released or fired, in the Fig. 5 system, in order to initiate conduction in the protector-ignitrons such as 1P and 3P. In other words, we have eliminated the grid-release thyratron GR of Fig. 1. A possible disadvantage of the Fig. 5 circuit is that the insulating transformer 141′ must transfer a fault-responsive voltage-peak of somewhat higher power, because it now has to provide the releasing power for the grid-circuits of the protector-ignitrons, which is larger than the control-circuit power which is required by the grid-releasing thyratron GR of Fig. 1. Fig. 5 is included in our drawing, however, to indicate one of the many alternative circuits and connections which are possible to use, in carrying out our invention.

We wish it to be understood that we have attempted, in the foregoing description and in the accompanying drawing, to illustrate only the general principles of our invention, by way of illustration, with only a few of the many modified forms of embodiment which are possible. We desire that our invention, in its broadest aspects, shall be understood as including these and other modifications, including various other substitutions of equivalents, as well as various changes by means of omission of parts or features which are not needed, or the addition of other features or refinements, or the application of our invention to different power-lines, different protector-tube arrangements, and different rectifier-tube arrangements.

We claim as our invention:

1. In combination, a power-line, a means for energizing the same, a fault-responsive means for deenergizing the same, a load-equipment connected to the power-line, said load-equipment being subject to unpredictably occurring short-circuited conditions, and a protective-means for quickly protecting the load-equipment immediately after a short-circuited condition occurs therein and before the power-line can be deenergized, said protective-means comprising a protector-ignitron connected across the power-line, said protector-ignitron having an ignitor, an exciting anode, and a control-grid, a means for normally applying a blocking potential to the control-grid of the protector-ignitron, a means for firing the ignitor of the protector-ignitron, a means for energizing the exciting anode of the protector-ignitron so that said exciting anode will hold an arc after the corresponding ignitor has been fired, and a fault-detecting means, responsive to a short-circuited condition in the load-equipment, for quickly applying a releasing potential to the control-grid of the protector-ignitron.

2. The invention as defined in claim 1, characterized by said load-equipment including a serially connected load-circuit resistance of such magnitude as to provide a voltage suitable for use in the initiation of the firing of the protector-ignitron in the event of a short-circuited condition of the load-equipment, and further characterized by the fault-detecting means including a grid-controlled detector-tube, a means for normally applying a blocking potential to the control-grid of said detector-tube, and a means, responsive to the voltage-drop in said serially connected load-circuit resistance, for applying a releasing potential to the control-grid of said detector-tube.

3. The invention as defined in claim 1, in combination with an interlocking means, responsive to a conducting condition of the protector-ignitron, for deenergizing the power-line.

4. The invention as defined in claim 1, characterized by an interlocking means, responsive to said fault-detecting means, for deenergizing the power-line.

5. The invention as defined in claim 1, in combination

with an interlocking means, responsive to a failure of an arc-holding current-condition in the exciting anode of the protector-ignitron, for deenergizing the power-line.

6. In combination, an initially deenergized power-line, a load-equipment connected to the power-line, said load-equipment being subject to unpredictably occurring short-circuited conditions, a protector-ignitron connected across the power-line, said protector-ignitron having an ignitor, an exciting anode, and a control-grid, a means for normally applying a blocking potential to the control-grid of the protector-ignitron, a means for firing the ignitor of the protector-ignitron, a means for energizing the exciting anode of the protector-ignitron so that said exciting anode will hold an arc after the corresponding ignitor has been fired, a means for initiating the energization of the power-line, a means for imposing an impediment against the energization of the power-line in response to the absence of an arc-holding current-condition in the exciting anode of the protector-ignitron, a fault-detecting means, responsive to a short-circuited condition in the load-equipment, for quickly applying a releasing potential to the control-grid of the protector-ignitron, and a fault-responsive means for deenergizing the power-line.

7. In combination, an initially deenergized power-line, a load-equipment connected to the power-line, said load-equipment being subject to unpredictably occurring short-circuited conditions, a protector-ignitron connected across the power-line, said protector-ignitron having an ignitor, an exciting anode, and a control-grid, a means for normally applying a blocking potential to the control-grid of the protector-ignitron, a means for firing the ignitor of the protector-ignitron, a means for energizing the exciting anode of the protector-ignitron so that said exciting anode will hold an arc after the corresponding ignitor has been fired, a means for energizing the power-line, a means for imposing an impediment against the energization of the power-line, a means for removing said impediment against the energization of the power-line in response to the establishment of an arc-holding current-condition in the exciting anode of the protector-ignitron, a fault-detecting means, responsive to a short-circuited condition in the load-equipment, for quickly applying a releasing potential to the control-grid of the protector-ignitron, and a fault-responsive means for deenergizing the power-line.

8. In combination, a direct-current power-line, a means for energizing the same, a fault-responsive means for deenergizing the same, a load-equipment connected to the power-line, said load-equipment being subject to unpredictably occurring short-circuited conditions, and a protective-means for quickly protecting the load-equipment immediately after a short-circuited condition occurs therein and before the power-line can be deenergized, said protective-means comprising a plurality of parallel-connected protector-ignitrons connected across the power-line, each protector-ignitron having an ignitor, an exciting anode, and a control-grid, a means for normally applying a blocking potential to the control-grid of each of the protector-ignitrons, a means for periodically successively firing the ignitors of the protector-ignitrons, a means for applying energizing-impulses of limited durations to the exciting anodes of the protector-ignitrons so that each exciting anode will hold an arc after the corresponding ignitor has been fired, the durations of said energizing-impulses being such that there is an overlapping of the arc-holding conditions of the exciting anodes of successive protector-ignitrons, and a fault-detecting means, responsive to a short-circuited condition in the load-equipment, for quickly applying a releasing potential to the control-grids of all of the protector-ignitrons.

9. The invention as defined in claim 8, in combination with an interlocking means, responsive to a failure of an arc-holding current-condition in the exciting anode of any of the protector-ignitrons, for deenergizing the power-line.

10. A combination including a plurality of alternating-current supply-leads, a power-line, a plurality of power-tubes connected between said supply-leads and said power-line, each power-tube having a control-circuit means, of a type requiring suitable energization before each conducting-period of that power-tube, a means for energizing the control-circuit means of the several power-tubes in a manner suitable for producing an operative condition of said power-tubes, a load-equipment connected to the power-line, said load-equipment being subject to unpredictably occurring short-circuited conditions, a protector-ignitron connected across the power-line, said protector-ignitron having an ignitor, an exciting anode, and a control-grid, a means for normally applying a blocking potential to the control-grid of the protector-ignitron, a means for firing the ignitor of the protector-ignitron, a means for energizing the exciting anode of the protector-ignitron so that said exciting anode will hold an arc after the corresponding ignitor has been fired, a fault-detecting means, responsive to a short-circuited condition in the load-equipment, for quickly applying a relelasing potential to the control-grid of the protector-ignitron, and an interlocking means, responsive to a conducting condition of the protector-ignitron, for inapacitating the control-circuit means of the several power-tubes.

11. A combination including a plurality of alternating-current supply-leads, a power-line, a plurality of power-tubes connected between said supply-leads and said power-line, each power-tube having a control-circuit means, of a type requiring suitable energization before each conducting-period of that power-tube, a means for energizing the control-circuit means of the several power-tubes in a manner suitable for producing an operative condition of said power-tubes, a load-equipment connected to the power-line, said load-equipment being subject to unpredictably occurring short-circuited conditions, a protector-ignitron connected across the power-line, said protector-ignitron having an ignitor, an exciting anode, and a control-grid, a means for normally applying a blocking potential to the control-grid of the protector-ignitron, a means for firing the ignitor of the protector-ignitron, a means for energizing the exciting anode of the protector-ignitron so that said exciting anode will hold an arc after the corresponding ignitor has been fired, a fault-detecting means, responsive to a short-circuited condition in the load-equipment, for quickly applying a releasing potential to the control-grid of the protector-ignitron, and an interlocking means, responsive to said fault-detecting means, for incapacitating the control-circuit means of the several power-tubes.

12. A combination including a plurality of alternating-current supply-leads, a power-line, a plurality of power-tubes connected between said supply-leads and said power-line, each power-tube having a control-circuit means, of a type requiring suitable energization before each conducting-period of that power-tube, a means for energizing the control-circuit means of the several power-tubes in a manner suitable for producing an operative condition of said power-tubes, a load-equipment connected to the power-line, said load-equipment being subject to unpredictably occurring short-circuited conditions, a protector-ignitron connected across the power-line, said protector-ignitron having an ignitor, an exciting anode, and a control-grid, a means for normally applying a blocking potential to the control-grid of the protector-ignitron, a means for firing the ignitor of the protector-ignitron, a means for energizing the exciting anode of the protector-ignitron so that said exciting anode will hold an arc after the corresponding ignitor has been fired, a fault-detecting means, responsive to a short-circuited condition in the load-equipment, for quickly applying a releasing potential to the control-grid of the protector-ignitron, and an interlocking means, responsive to a failure of an arc-holding current-condition in the exciting anode of the protector-ignitron, for incapacitating the control-circuit means of the several power-tubes.

13. A combination including a plurality of alternating-current supply-leads, an initially deenergized power-line, a plurality of power-tubes connected between said supply-leads and said power-line, each power-tube having a control-circuit means, of a type requiring suitable energization before each conducting-period of that power-tube, a means for initially incapacitating the control-circuit means of the several power-tubes, a load-equipment connected to the power-line, said load-equipment being subject to unpredictably occurring short-circuited conditions, a protector-ignitron connected across the power-line, said protector-ignitron having an ignitor, an exciting anode, and a control-grid, a means for normally applying a blocking potential to the control-grid of the protector-ignitron, a means for initiating the firing of the ignitor of the protector-ignitron, a means for energizing the exciting anode of the protector-ignitron so that said exciting anode will hold an arc after the corresponding ignitor has been fired, a means for removing the aforesaid incapacitation from the control-circuit means of the several power-tubes in response to an arc-holding current-condition in the exciting anode of the protector-ignitron, a means for initiating the energization of the control-circuit means of the several power-tubes in a manner suitable for producing an operative condition of said power-tubes, and a fault-detecting means, responsive to a short-circuited condition in the load-equipment, for quickly applying a releasing potential to the control-grid of the protector-ignitron.

14. A combination including a plurality of alternating-current supply-leads, an initially deenergized power-line, a plurality of power-tubes connected between said supply-leads and said power-line, each power-tube having a control-circuit means, of a type requiring suitable energization before each conducting-period of that power-tube, a means for energizing the control-circuit means of the several power-tubes in a manner suitable for producing an operative condition of said power-tubes, a means for initially incapacitating the control-circuit means of the several power-tubes, a load-equipment connected to the power-line, said load-equipment being subject to unpredictably occurring short-circuited conditions, a protector-ignitron connected across the power-line, said protector-ignitron having an ignitor, an exciting anode, and a control-grid, a means for normally applying a blocking potential to the control-grid of the protector-ignitron, a means for initiating the firing of the ignitor of the protector-ignitron, a means for energizing the exciting anode of the protector-ignitron so that said exciting anode will hold an arc after the corresponding ignitor has been fired, a means for removing the aforesaid incapacitation from the control-circuit means of the several power-tubes in response to an arc-holding current-condition in the exciting anode of the protector-ignitron, and a fault-detecting means, responsive to a short-circuited condition in the load-equipment, for quickly applying a releasing potential to the control-grid of the protector-ignitron.

15. A combination including a plurality of alternating-current supply-leads, a direct-current power-line, a plurality of rectifier-tubes connected between said supply-leads and said power-line, each rectifier-tube having a control-circuit means, of a type requiring suitable energization before each conducting-period of that rectifier-tube, a means for energizing the control-circuit means of the several rectifier-tubes in a manner suitable for producing an operative condition of said rectifier-tubes, a load-equipment connected to the power-line, said load-equipment being subject to unpredictably occurring short-circuited conditions, a plurality of parallel-connected protector-ignitrons connected across the power-line, each protector-ignitron having an ignitor, an exciting anode, and a control-grid, a means for normally applying a blocking potential to the control-grid of each of the protector-ignitrons, a means for periodically successively firing the ignitors of the protector-ignitrons, a means for applying energizing-impulses of limited durations to the exciting anodes of the protector-ignitrons so that each exciting anode will hold an arc after the corresponding ignitor has been fired, the durations of said energizing-impulses being such that there is an overlapping of the arc-holding conditions of the exciting anodes of successive protector-ignitrons, and a fault-detecting means, responsive to a short-circuited condition in the load-equipment, for quickly applying a releasing potential to the control-grids of all of the protector-ignitrons.

16. The invention as defined in claim 15, in combination with an interlocking means, responsive to the occurrence of a conducting condition in at least one of the parallel-connected protector-ignitrons, for incapacitating the control-circuit means of the several rectifier-tubes.

17. The invention as defined in claim 15, in combination with an interlocking means, responsive to said fault-detecting means, for incapacitating the control-circuit means of the several rectifier-tubes.

18. The invention as defined in claim 15, in combination with an interlocking means, responsive to a failure of an arc-holding current-condition in the exciting anode of any of the protector-ignitrons, for incapacitating the control-circuit means of the several rectifier-tubes.

References Cited in the file of this patent

UNITED STATES PATENTS

1,691,395	Langmuir	Nov. 13, 1928
1,691,423	Alexanderson et al.	Nov. 13, 1928
2,088,436	Reid	July 27, 1937
2,141,927	Morack	Dec. 27, 1938
2,165,041	Filberich et al.	July 4, 1939
2,208,414	Evans	July 16, 1940
2,571,027	Garner	Oct. 9, 1951
2,631,261	Hough et al.	Mar. 10, 1953