(No Model.) 2 Sheets—Sheet 1.

J. W. SMISER.

BIER.

No. 590,282. Patented Sept. 21, 1897.

Fig. 1.

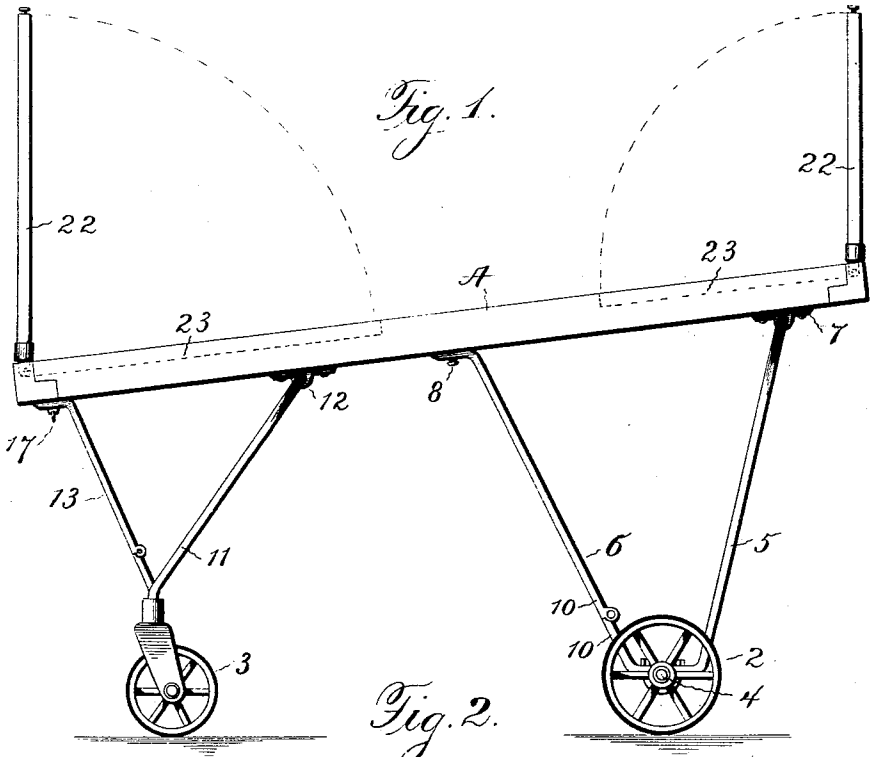

Fig. 2.

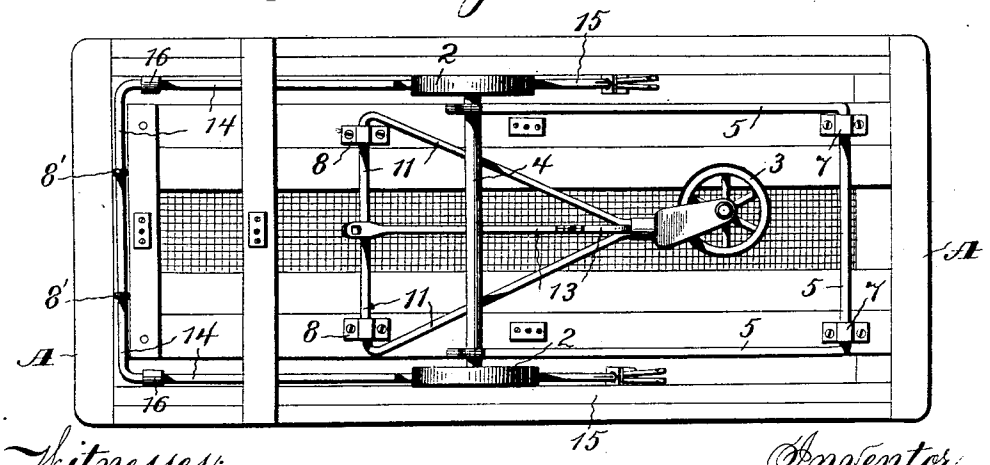

Witnesses:
Jas. E. Hutchinson.
G. F. Downing.

Inventor:
J. W. Smiser
by H. A. Seymour Atty.

THE NORRIS PETERS CO., PHOTO-LITHO., WASHINGTON, D. C.

(No Model.) 2 Sheets—Sheet 2.

J. W. SMISER.

BIER.

No. 590,282. Patented Sept. 21, 1897.

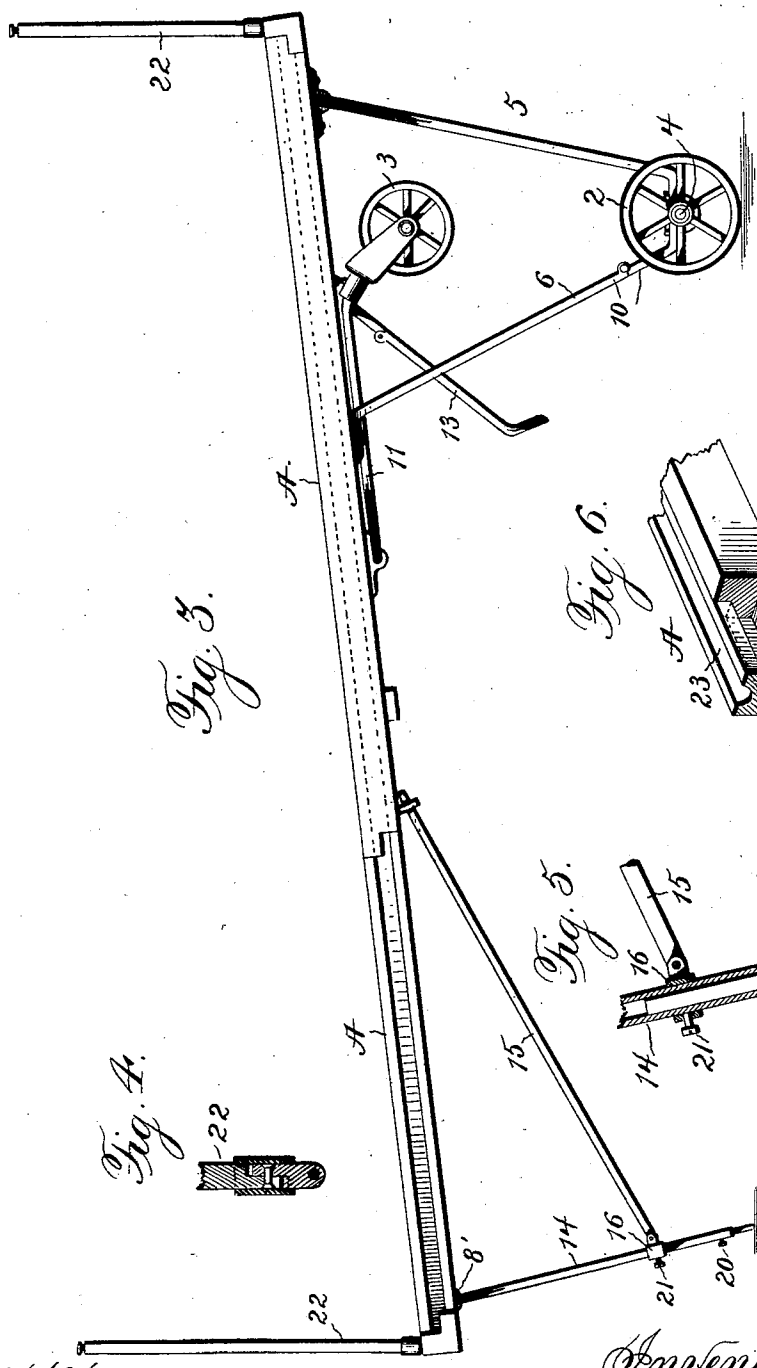

Fig. 3.

Fig. 6.

Fig. 5.

Fig. 4.

Witnesses:
Jas. E. Hutchinson.
G. F. Downing.

Inventor.
J. W. Smiser
By H. A. Seymour Atty.

THE NORRIS PETERS CO., PHOTO-LITHO., WASHINGTON, D. C.

UNITED STATES PATENT OFFICE.

JAMES W. SMISER, OF CYNTHIANA, KENTUCKY.

BIER.

SPECIFICATION forming part of Letters Patent No. 590,282, dated September 21, 1897.

Application filed September 11, 1895. Serial No. 562,205. (No model.)

To all whom it may concern:

Be it known that I, JAMES W. SMISER, a resident of Cynthiana, in the county of Harrison and State of Kentucky, have invented certain new and useful Improvements in Biers; and I do hereby declare the following to be a full, clear, and exact description of the invention, such as will enable others skilled in the art to which it appertains to make and use the same.

My invention relates to an improvement in combined biers and cooling-boards, the object being to provide a simple appliance which can be easily adjusted and manipulated to accommodate the height of the person to be embalmed and to suit the embalmer; and it consists in certain novel features of construction and combinations of parts, which will be hereinafter described, and pointed out in the claims.

In the accompanying drawings, Figure 1 is a view of the device in its normal position. Fig. 2 shows it folded, and Fig. 3 shows it elongated. Fig. 4 shows the end attachment; Fig. 5, the brace and support connection, and Fig. 6 the grooves in which the parts of the platform slide.

A represents the top of the device. This is made extensible to accommodate different corpses, and the parts are fitted together and slide after the manner in which the parts of an ordinary extension-table slide in and out. This top may be covered with cane and fitted with a head-rest and any other appliances suitable for the use to which the device is to be placed. The top is mounted on suitable truck-wheels 2 2 and 3. A shaft 4 is supported in the hubs of wheels 2 2, and this shaft is connected to the top by means of the U-shaped yoke 5 and the brace-arms 6 6. This yoke is hinged to the top by means of a pair of straps 7 7, and the brace-arms 6 6 are provided with holes at their upper ends to receive thumb-screws 8 8, by which they are attached to the top of the device, and to provide for folding these arms back out of the way when the bier is folded together, as in Fig. 2, they are made in two sections hinged together, as shown at 10 10. A caster-wheel 3 is also provided and utilized when the parts are in the position shown in Fig. 1. This is connected with the lower end of the arms 11 11, which are hinged to the top by means of straps 12 12, and a brace-arm 13, similar to those previously described, (6 6,) is adapted to be connected with the caster-wheel and the top by means of thumb-screw 17 to hold the wheel braced in position.

When the device is elongated, as shown in Fig. 3, another set of extensible supports 14 14 is brought into play. These supports are hinged to the top by straps 8′ 8′, (shown in Fig. 2,) and the braces 15 15, pivotally connected to the top at one end, have sleeves 16 16, pivotally connected to their outer ends, and these sleeves slide on the supports 14 14 as they are folded or adjusted. The length of the supports 14 14 is regulated by set-screws 20 20, and the sleeves 16 16 are held in place on these supports by means of set-screws 21 21. By this means the inclination of the top may be regulated to suit the embalmer.

In addition to the parts described a curtain rest or support may be used. This consists of a frame 22 22, hinged at each end of the bier, and grooves 23 23 are provided to receive these frames when they are folded.

It is evident that light changes might be resorted to in the form and arrangement of the several parts described without departing from the spirit and scope of my invention, and hence I do not wish to limit myself to the exact construction herein set forth; but,

Having fully described my invention, what I claim as new, and desire to secure by Letters Patent, is—

1. In a bier, the combination with a top comprising two sections having sliding connection with each other whereby it may be shortened or lengthened, and two pairs of trucks connected with one of these sections, of a support having a sliding adjustable connection with the other section, substantially as set forth.

2. In a bier, the combination with a top comprising two sections having sliding adjustable connection with each other, and trucks connected with one of these sections, of an extensible support having a pivotal

adjustable connection with the other section, substantially as set forth.

3. In a bier, the combination with a top comprising sections having sliding connection with each other whereby it may be lengthened and shortened, of two trucks of different heights connected with one section and constructed to fold thereunder, it comprising the hinged yokes 5 and 11 and jointed braces 6 and 13, an extensible support hinged to the other section, and a brace having sliding connection with the bier at one end and the support at the other end, substantially as set forth.

In testimony whereof I have signed this specification in the presence of two subscribing witnesses.

JAMES W. SMISER.

Witnesses:
J. G. MONTGOMERY,
E. W. SMIZER.