(12) INTERNATIONAL APPLICATION PUBLISHED UNDER THE PATENT COOPERATION TREATY (PCT)

(19) World Intellectual Property Organization
International Bureau

(43) International Publication Date
14 May 2021 (14.05.2021)

WIPO | PCT

(10) International Publication Number
WO 2021/092136 A1

(51) International Patent Classification:
E21B 33/03 (2006.01) *E21B 33/038* (2006.01)

(21) International Application Number:
PCT/US2020/059055

(22) International Filing Date:
05 November 2020 (05.11.2020)

(25) Filing Language: English

(26) Publication Language: English

(30) Priority Data:
16/677,179 07 November 2019 (07.11.2019) US

(71) Applicant: **SAUDI ARABIAN OIL COMPANY** [SA/SA]; 1 Eastern Avenue, 31311 Dhahran (SA).

(71) Applicant *(for AG only)*: **ARAMCO AMERICAS** [US/US]; 1200 Smith Street, Two Allen Building, Houston, TX 77002 (US).

(72) Inventors: **NEACSU, Marius**; Saudi Aramco, P.O. Box 11442, 31311 Dhahran (SA). **AL-RAMADHAN, Ahmed, A.**; Saudi Aramco, P.O. Box 13467, 31311 Dhahran (SA). **AL-MOUSA, Ahmed**; Saudi Aramco, P.O. Box 5376, 31311 Dhahran (SA).

(74) Agent: **BRUCE, Carl, E.** et al.; Fish & Richardson P.C., P.O. Box 1022, Minneapolis, MN 55440-1022 (US).

(81) Designated States *(unless otherwise indicated, for every kind of national protection available)*: AE, AG, AL, AM, AO, AT, AU, AZ, BA, BB, BG, BH, BN, BR, BW, BY, BZ, CA, CH, CL, CN, CO, CR, CU, CZ, DE, DJ, DK, DM, DO, DZ, EC, EE, EG, ES, FI, GB, GD, GE, GH, GM, GT, HN, HR, HU, ID, IL, IN, IR, IS, IT, JO, JP, KE, KG, KH, KN, KP, KR, KW, KZ, LA, LC, LK, LR, LS, LU, LY, MA, MD, ME, MG, MK, MN, MW, MX, MY, MZ, NA, NG, NI, NO, NZ, OM, PA, PE, PG, PH, PL, PT, QA, RO, RS, RU, RW, SA, SC, SD, SE, SG, SK, SL, ST, SV, SY, TH, TJ, TM, TN, TR, TT, TZ, UA, UG, US, UZ, VC, VN, WS, ZA, ZM, ZW.

(84) Designated States *(unless otherwise indicated, for every kind of regional protection available)*: ARIPO (BW, GH, GM, KE, LR, LS, MW, MZ, NA, RW, SD, SL, ST, SZ, TZ, UG, ZM, ZW), Eurasian (AM, AZ, BY, KG, KZ, RU, TJ, TM), European (AL, AT, BE, BG, CH, CY, CZ, DE, DK, EE, ES, FI, FR, GB, GR, HR, HU, IE, IS, IT, LT, LU, LV, MC, MK, MT, NL, NO, PL, PT, RO, RS, SE, SI, SK, SM, TR), OAPI (BF, BJ, CF, CG, CI, CM, GA, GN, GQ, GW, KM, ML, MR, NE, SN, TD, TG).

Published:
— *with international search report (Art. 21(3))*

(54) Title: WELLHEAD TELESCOPIC ADAPTOR FOR WELLHEAD ASSEMBLY

(57) Abstract: A wellhead assembly (100) that includes a wellhead (102) disposed at a surface of a wellbore, a production tree (104) fluidically coupled to the wellhead (102), and a telescopic adaptor assembly (106) residing between and fluidically coupled to the wellhead and the production tree. The telescopic adaptor assembly (106) extends or retracts to change an elevation of the production tree (104) with respect to the wellhead (102) and rotates to change a radial position of the production tree with respect to the wellhead. The telescopic adaptor assembly (106) includes a flange (108) attached to the wellhead and a first pipe (110) rotationally coupled to the flange. The first pipe (108) is rotational about a longitudinal axis of the first pipe. The telescopic adaptor assembly includes a second pipe (112) attached to the production tree (104) and is disposed concentrically inside the first pipe (108). The second pipe (112) is movable along the longitudinal axis with respect to the first pipe (108).

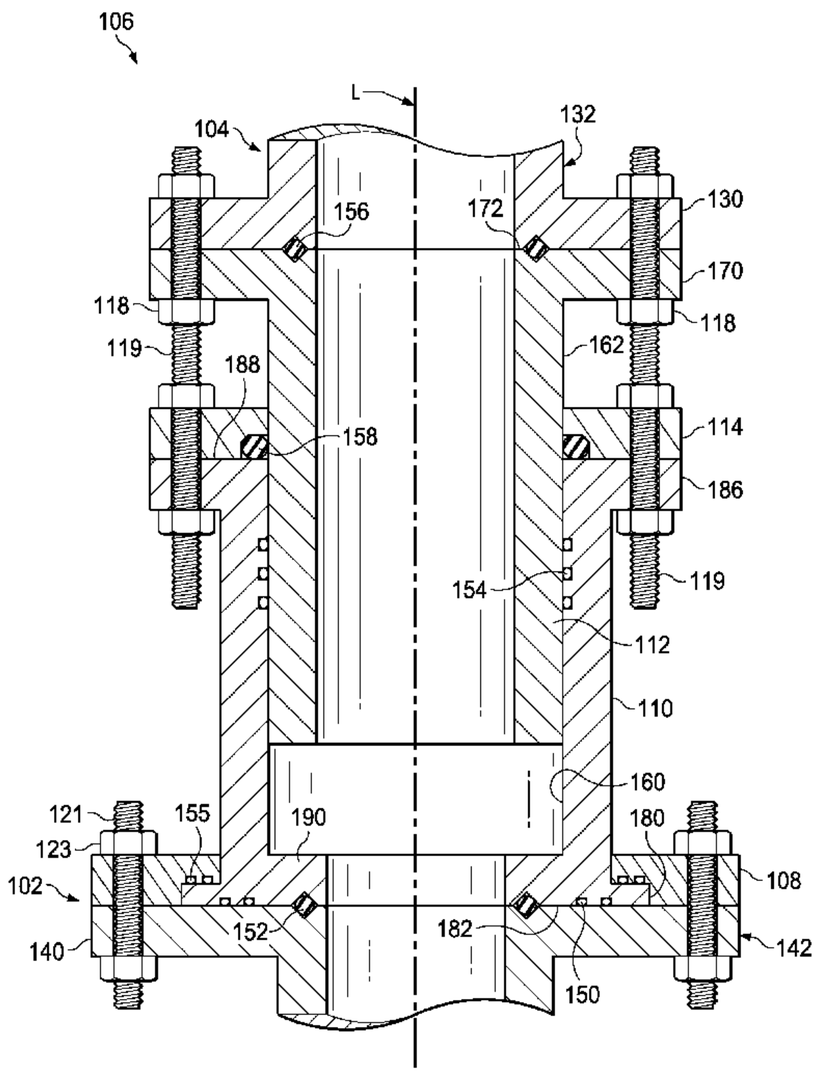

FIG. 2

WO 2021/092136 A1

WELLHEAD TELESCOPIC ADAPTOR FOR WELLHEAD ASSEMBLY

Claim of Priority

[0001] This application claims priority to U.S. Patent Application No. 16/677,179 filed on November 7, 2019, the entire contents of which are hereby incorporated by reference.

Field of the Disclosure

[0002] This disclosure relates to wellhead assemblies, and more specifically to adjusting a position of a wellhead assembly.

Background of the Disclosure

[0003] A production tree is an assembly of valves, spools, fittings, and other components used to regulate the flow of fluids in a wellbore. The production tree is positioned above and is fluidically connected to a wellhead. The production tree is connected to surface flow lines. Depending on the position and configuration of the flow line, the production tree or the flow line may need to be modified to align the flow line with a connection interface of the production tree. Such modifications can delay production times.

Summary

[0004] Implementations of the present disclosure include a wellhead assembly that includes a wellhead disposed at a surface of a wellbore, a production tree fluidically coupled to the wellhead, and a telescopic adaptor assembly residing between and fluidically coupled to the wellhead and the production tree. The telescopic adaptor assembly is configured to extend or retract to change an elevation of the production tree with respect to the wellhead and is configured to rotate to change a radial position of the production tree with respect to the wellhead. The telescopic adaptor assembly includes a flange attached to the wellhead and a first pipe rotationally coupled to the flange. The first pipe is fluidically coupled to the wellhead and is rotational about a longitudinal axis of the first pipe. The telescopic adaptor assembly also includes a second pipe that includes a first portion disposed concentrically inside the first pipe and a second portion disposed outside the first pipe. The second pipe is movable along the longitudinal axis with respect to the first pipe. The second pipe is rotationally fixed and fluidically

coupled to the production tree such that moving the second pipe moves the production tree along the longitudinal axis. The second pipe is rotationally fixed to the first pipe such that rotating the first pipe rotates the production tree about the longitudinal axis of the first pipe.

[0005] In some implementations, the wellhead assembly further includes a sealing flange disposed between a coupling end of the second pipe and a distal end of the first pipe opposite a second end rotationally coupled to the flange attached to the wellhead. The sealing flange is rotationally fixed to the first pipe and the second pipe. The sealing flange includes an O-ring configured to form a fluid seal with the first and second pipe to prevent fluid from leaking through the telescopic adaptor.

[0006] In some implementations, the wellhead assembly further includes an interior flange extending inwardly from an inner surface of the first pipe. The interior flange is configured to support an end of the second pipe when the second pipe is retracted.

[0007] In some implementations, the first pipe includes a coupling flange extending from a rim of the first pipe. The rim is supported on the wellhead. The coupling flange is engaged with the flange attached to the wellhead to allow rotation of the first pipe with respect to the flange attached to the wellhead.

[0008] In some implementations, the rim of the first pipe includes an O-ring configured to form a fluid seal with the wellhead to prevent fluid from leaking through a joint between the first pipe and the wellhead.

[0009] In some implementations, the wellhead assembly further includes an O-ring disposed between an inner surface of the first pipe and an outer surface of the second pipe to form a fluid seal between the first and second pipe to prevent fluid from leaking through a gap defined between the inner surface of the first pipe and the outer surface of the second pipe.

[0010] In some implementations, the second pipe includes a coupling flange extending from a rim of the second pipe. The coupling flange is attached to a flange of the production tree.

[0011] In some implementations, the wellhead assembly further includes multiple threaded studs extending through respective holes of the coupling flange and the flange of the production tree to rotationally fix the second pipe to the production tree. The multiple threaded studs extend through respective holes of a second coupling

flange extending from a second rim of the first pipe to rotationally fix the second pipe to the first pipe. Moving the second pipe along the longitudinal axis includes turning multiple bolts of the respective threaded studs. The multiple bolts are disposed between the coupling flange of the second pipe and the second coupling flange of the first pipe.

[0012] In some implementations, the telescopic adaptor assembly is configured to replace a tubing bonnet.

[0013] In some implementations, the flange attached to the wellhead is attached to a top flange of a tubing spool of the wellhead and the second pipe is attached to a bottom flange of a valve of the production tree.

[0014] Implementations of the present disclosure also include a wellhead telescopic adaptor assembly that includes a flange attached to a wellhead disposed at a surface of a wellbore. The wellhead telescopic adaptor assembly also includes a first pipe rotationally coupled to the flange. The first pipe is fluidically coupled to the wellhead and is rotational about a longitudinal axis of the first pipe. The wellhead telescopic adaptor assembly also include a second pipe including a first portion disposed concentrically inside the first pipe and a second portion disposed outside the first pipe. The second pipe is movable along the longitudinal axis with respect to the first pipe. The second pipe is fixed and fluidically coupled to a production tree fluidically coupled, through the wellhead telescopic adaptor assembly, to the wellhead. The second pipe is fixed to the production tree such that moving the second pipe moves the production tree along the longitudinal axis. The second pipe is rotationally fixed to the first pipe such that rotating the first pipe rotates the production tree about the longitudinal axis of the first pipe to change a radial position of the production tree with respect to the wellhead.

[0015] In some implementations, the wellhead assembly further includes a sealing flange disposed between a coupling end of the second pipe and a distal end of the first pipe opposite a second end rotationally coupled to the flange attached to the wellhead. The sealing flange is rotationally fixed to the first pipe and the second pipe and includes an O-ring configured to form a fluid seal with the first and second pipe to prevent fluid from leaking through the telescopic adaptor.

[0016] In some implementations, the wellhead assembly further includes an interior flange extending inwardly from an inner surface of the first pipe. The interior flange is configured to support an end of the second pipe when the second pipe is retracted.

[0017] In some implementations, the first pipe includes a coupling flange extending from a rim of the first pipe. The rim is supported on the wellhead. The coupling flange is engaged with the flange attached to the wellhead to allow rotation of the first pipe with respect to the flange attached to the wellhead.

[0018] In some implementations, the rim of the first pipe includes an O-ring configured to form a fluid seal with the wellhead to prevent fluid from leaking through a joint between the first pipe and the wellhead.

[0019] In some implementations, the wellhead assembly further includes an O-ring disposed between an inner surface of the first pipe and an outer surface of the second pipe to form a fluid seal between the first and second pipe to prevent fluid from leaking through a gap defined between the inner surface of the first pipe and the outer surface of the second pipe.

[0020] In some implementations, the second pipe includes a coupling flange extending from a rim of the second pipe and attached to a flange of the production tree.

[0021] In some implementations, the wellhead assembly further includes a plurality threaded studs extending through a plurality of respective holes of the coupling flange and the flange of the production tree to rotationally fix the second pipe to the production tree. The plurality of threaded studs extend through respective holes of a second coupling flange extending from a second rim of the first pipe to rotationally fix the second pipe to the first pipe. Moving the second pipe along the longitudinal axis includes turning multiple bolts of the respective threaded studs. The multiple bolts are disposed between the coupling flange of the second pipe and the second coupling flange of the first pipe.

[0022] In some implementations, the flange attached to the wellhead is attached to a top flange of a tubing spool of the wellhead and the second pipe is attached to a bottom flange of a valve of the production tree.

[0023] Implementations of the present disclosure also include a telescopic adaptor assembly that includes a first flange attached to a first fluid outlet of a first surface. The telescopic adaptor assembly also includes a first pipe rotationally coupled to the first flange. The first pipe is fluidically coupled to the first fluid outlet and is rotational about a longitudinal axis of the first pipe. The telescopic adaptor assembly also includes a second pipe that includes a first portion disposed concentrically inside the first pipe and a second portion disposed outside the first pipe. The second pipe is

movable along the longitudinal axis with respect to the first pipe. The second pipe is fixed and fluidically coupled to a second fluid outlet of a second surface. The second fluid outlet is fluidically coupled, through the telescopic adaptor assembly, to the first fluid outlet. The second pipe is fixed to the second fluid outlet such that moving the second pipe moves the second surface along the longitudinal axis with respect to the first surface. The second pipe is rotationally fixed to the first pipe such that rotating the first pipe rotates the second surface about the longitudinal axis of the first pipe with respect to the first surface.

Brief Description of the Drawings

[0024] FIG. 1 is a front schematic view of a wellhead assembly.

[0025] FIG. 2 is a front, cross-sectional view of a telescopic adaptor assembly.

Detailed Description of the Disclosure

[0026] The present disclosure describes a telescopic adaptor assembly that is used in place of a fixed tubing bonnet to change a vertical position and a radial position of a production tree. The telescopic adaptor assembly resides between the wellhead and the production tree, with the production tree above the telescopic adaptor assembly. The telescopic adaptor assembly includes a rotatable pipe or sleeve that allows the production tree to rotate and an extendable pipe residing within the rotatable pipe that allows the production tree to move vertically to adjust an elevation of the production tree with respect to the wellhead. Adjusting the elevation and radial position of the production tree allows the production tree to be quickly connected to surface flow lines that might not be aligned with the initial position of the production tree.

[0027] Particular implementations of the subject matter described in this specification can be implemented so as to realize one or more of the following advantages. The production tree can be moved vertically with respect to the wellhead without using special tools or equipment (for example, using a wrench), by turning bolts of the telescopic adaptor assembly that support the weight of the production tree. The production tree can be rotated manually, without using special tools. Adjusting the position of the production tree quickly can save time and resources.

[0028] FIG. 1 illustrates a wellhead assembly 100 at a surface 116 of a wellbore 120. The wellhead assembly 100 includes a wellhead 102, a production tree 104

fluidically coupled to the wellhead 102, and a telescopic adaptor assembly 106 residing between and fluidically coupled to the wellhead 102 and the production tree 104. The telescopic adaptor assembly 106 extends or retracts to change an elevation of the production tree 104 with respect to the wellhead 102 or the surface 116 of the wellbore 120. The telescopic adaptor assembly 106 also rotates to change a radial position of the production tree 104 with respect to the wellhead 102. Adjusting a height or radial position of the production tree 104 allows quick hookup to the production flow line without needing to modifying or retrofitting the production tree 104. Although the telescopic adaptor assembly 106 is shown implemented in an onshore wellhead application, the telescopic adaptor assembly 106 can be used in other applications where adjusting a height or radial position of a piping system is desired, such as in offshore wellhead settings or other piping systems in oil and gas refineries and chemical plants. Additionally, the telescopic adaptor assembly 106 can be used in offshore platform upgrades, in which the wellhead of existing wells needs to be elevated to be compatible with new platform designs.

[0029] The telescopic adaptor assembly 106 can replace a fixed tubing bonnet. For example, the telescopic adaptor assembly 106 can function as an adjustable joint and as a tubing bonnet of a wellhead assembly. The telescopic adaptor assembly 106 can be attached, on a bottom end, to a top flange 140 of a tubing spool 142 of the wellhead 102 and can be attached, on a top end, to a bottom flange 108 of a valve 132 (for example, a master valve) of the production tree 104.

[0030] The telescopic adaptor assembly 106 has a first pipe 110 and a second pipe 112 with a portion of the second pipe 112 disposed inside the first pipe 110. The first pipe 110 acts as a sleeve disposed around the second pipe 112 to form a fluid seal with the second pipe 112. The first pipe 110 is rotatable (for example, clockwise or counter-clockwise) with respect to the wellhead 102. The second pipe 112 is vertically movable (for example, extendable) with respect to the first pipe 110. The first pipe 110 is attached to the wellhead 102 by a main flange 108 and is attached on the opposite end to a sealing flange 114. The second pipe 112 is attached to a flange 130 of the production tree 104 by a top flange 115. As further described in detail later with respect to FIG. 2, multiple threaded studs 119 extend through respective flanges of the telescopic adaptor assembly 106 to adjust a height of the production tree 104 as bolts 118 of the production tree are turned to move along the threaded studs 119.

[0031] FIG. 2 is a front, cross-sectional view of the telescopic adaptor assembly 106. The telescopic adaptor assembly 106 includes the main flange 108, the first pipe 110, the second pipe 112, an inner ring 190, and a sealing flange 114. The main flange 108 is attached to the tubing spool 142 of the wellhead 102. The first pipe 110 is rotationally coupled to the main flange 108. For example, the first pipe 110 has a coupling flange 180 extending outwardly from a rim 182 of the first pipe 110. The rim 182 and the coupling flange 180 are supported on the flange 140 of the wellhead 102. The coupling flange 180 is engaged with an annular groove of the main flange 108 to prevent the first pipe 110 from moving vertically and to allow rotation of the first pipe 110 with respect to the main flange 108 that is fixed to the wellhead 102. Thus, the first pipe 110 is fluidically coupled to the wellhead 140 and can rotate about a longitudinal axis '*L*' of the first pipe 110.

[0032] The first pipe 110 has an interior flange 190 that extends inwardly from an inner surface 160 of the first pipe 110 to support a bottom end of the second pipe 112. The interior flange 190 has an O-ring 152 that forms a fluid seal with the wellhead 102 (for example, with the flange 140 of the tubing spool 142) to prevent fluid from leaking through a joint between the first pipe 110 and the wellhead 102. In some implementations, the rim 182 (or the coupling flange 180) of the first pipe 110 has one or more additional O-rings 150 that form a fluid seal with the wellhead 102. The coupling flange 180 has one or more O-rings 155 that form a fluid seal with the main flange 108 to prevent fluid from leaking through a joint between the coupling flange 180 and the main flange 108.

[0033] The second pipe 112 has a first portion (for example, a portion of the tubular body extending from a flange 170) disposed concentrically inside the first pipe 110 and a second portion (for example, the flange 170) disposed outside the first pipe 110. The second pipe 112 is movable along the longitudinal axis '*L*' (for example, vertically) with respect to the first pipe 110. The second pipe 112 is rotationally fixed to the first pipe 110. The second pipe 112 is also rotationally fixed and fluidically coupled to the production tree 104 such that moving the second pipe 112 up or down moves the production tree 104 along the longitudinal axis '*L*', and rotating the first pipe 110 rotates the second pipe 118 and the production tree 104 about the longitudinal axis '*L*' of the first pipe. Specifically, multiple threaded studs 119 long enough to extend from a top flange 186 of the first pipe 110 to the bottom flange 130 of the production

tree 106 serve to rotationally fix the production tree 106 and the second pipe 112 to the first pipe 110. Each threaded stud 119 extends through a respective hole of the coupling flange 170 of the second pipe 112 and the flange 130 of the production tree 106 to attach the second pipe 112 to the production tree 106. Each threaded stud also extends through a respective hole of a coupling flange 186 that extends from a rim 188 of the first pipe 110 to rotationally fix the second pipe 112 to the first pipe110. To move the second pipe 112 (and by extension the production tree 106), the bolts 118 supporting or bearing against the coupling flange 170 of the second pipe 112 (for example, the bolts 118 disposed between the coupling flange 170 of the second pipe 112 and the coupling flange 186 of the first pipe 110) are rotated to extend or retract the second pipe 112, lower or lifting the production tree 104.

[0034] The telescopic adaptor assembly 106 also has a sealing flange 114 disposed between a coupling end (for example, the coupling flange 170) of the second pipe 112 and a distal end (for example, the coupling flange 186) of the first pipe 110. The sealing flange 114 is rotationally fixed to the first pipe 110 and the second pipe 112. The sealing flange 114 has an O-ring 158 that forms a fluid seal with the first and second pipe to prevent fluid from leaking through the telescopic adaptor assembly 1106. The fluid seal is tightened as the sealing flange 114 is tightened against the coupling flange 186 of the first pipe 110. Another O-ring 156 can be disposed at an interface between the second pipe 112 and the production tree 106 to form a fluid seal.

[0035] The telescopic adaptor assembly 106 also has one or more O-rings disposed between the inner surface 160 of the first pipe 110 and an outer surface 162 of the second pipe 112 to form a fluid seal between the first and second pipe to prevent fluid from leaking through a gap defined between the inner surface 160 of the first pipe 110 and the outer surface 162 of the second pipe 112.

[0036] The O-rings can be any kind of flexible fitting or gasket that forms a fluid seal between two solid surfaces.

[0037] Although the following detailed description contains many specific details for purposes of illustration, it is understood that one of ordinary skill in the art will appreciate that many examples, variations and alterations to the following details are within the scope and spirit of the disclosure. Accordingly, the exemplary implementations described in the present disclosure and provided in the appended

figures are set forth without any loss of generality, and without imposing limitations on the claimed implementations.

[0038] Although the present implementations have been described in detail, it should be understood that various changes, substitutions, and alterations can be made hereupon without departing from the principle and scope of the disclosure. Accordingly, the scope of the present disclosure should be determined by the following claims and their appropriate legal equivalents.

[0039] The singular forms "a", "an" and "the" include plural referents, unless the context clearly dictates otherwise.

[0040] As used in the present disclosure and in the appended claims, the words "comprise," "has," and "include" and all grammatical variations thereof are each intended to have an open, non-limiting meaning that does not exclude additional elements or steps.

[0041] As used in the present disclosure, terms such as "first" and "second" are arbitrarily assigned and are merely intended to differentiate between two or more components of an apparatus. It is to be understood that the words "first" and "second" serve no other purpose and are not part of the name or description of the component, nor do they necessarily define a relative location or position of the component. Furthermore, it is to be understood that that the mere use of the term "first" and "second" does not require that there be any "third" component, although that possibility is contemplated under the scope of the present disclosure.

WHAT IS CLAIMED IS:

1. A wellhead assembly comprising:

a wellhead disposed at a surface of a wellbore;

a production tree fluidically coupled to the wellhead; and

a telescopic adaptor assembly residing between and fluidically coupled to the wellhead and the production tree, the telescopic adaptor assembly configured to extend or retract to change an elevation of the production tree with respect to the wellhead and configured to rotate to change a radial position of the production tree with respect to the wellhead, the telescopic adaptor assembly comprising,

a flange attached to the wellhead,

a first pipe rotationally coupled to the flange, the first pipe fluidically coupled to the wellhead and rotational about a longitudinal axis of the first pipe, and

a second pipe comprising a first portion disposed concentrically inside the first pipe and a second portion disposed outside the first pipe, the second pipe movable along the longitudinal axis with respect to the first pipe, the second pipe rotationally fixed and fluidically coupled to the production tree such that moving the second pipe moves the production tree along the longitudinal axis, the second pipe rotationally fixed to the first pipe such that rotating the first pipe rotates the production tree about the longitudinal axis of the first pipe.

2. The wellhead assembly of claim 1, further comprising a sealing flange disposed between a coupling end of the second pipe and a distal end of the first pipe opposite a second end rotationally coupled to the flange attached to the wellhead, the sealing flange rotationally fixed to the first pipe and the second pipe and comprising an O-ring configured to form a fluid seal with the first and second pipe to prevent fluid from leaking through the telescopic adaptor.

3. The wellhead assembly of claim 1, further comprising an interior flange extending inwardly from an inner surface of the first pipe, the interior flange configured to support an end of the second pipe when the second pipe is retracted.

4. The wellhead assembly of claim 1, wherein the first pipe comprises a coupling flange extending from a rim of the first pipe, the rim supported on the wellhead, the

coupling flange engaged with the flange attached to the wellhead to allow rotation of the first pipe with respect to the flange attached to the wellhead.

5. The wellhead assembly of claim 4, wherein the rim of the first pipe comprises an O-ring configured to form a fluid seal with the wellhead to prevent fluid from leaking through a joint between the first pipe and the wellhead.

6. The wellhead assembly of claim 1, further comprising an O-ring disposed between an inner surface of the first pipe and an outer surface of the second pipe to form a fluid seal between the first and second pipe to prevent fluid from leaking through a gap defined between the inner surface of the first pipe and the outer surface of the second pipe.

7. The wellhead assembly of claim 1, wherein the second pipe comprises a coupling flange extending from a rim of the second pipe and attached to a flange of the production tree.

8. The wellhead assembly of claim 7, further comprising a plurality threaded studs extending through a plurality of respective holes of the coupling flange and the flange of the production tree to rotationally fix the second pipe to the production tree, the plurality of threaded studs extending through respective holes of a second coupling flange extending from a second rim of the first pipe to rotationally fix the second pipe to the first pipe, and wherein moving the second pipe along the longitudinal axis comprises turning a plurality of bolts of the respective threaded studs, the plurality of bolts disposed between the coupling flange of the second pipe and the second coupling flange of the first pipe.

9. The wellhead assembly of claim 1, wherein the telescopic adaptor assembly is configured to replace a tubing bonnet.

10. The wellhead assembly of claim 1, wherein the flange attached to the wellhead is attached to a top flange of a tubing spool of the wellhead and wherein the second pipe is attached to a bottom flange of a valve of the production tree.

11. A wellhead telescopic adaptor assembly comprising:

a flange attached to a wellhead disposed at a surface of a wellbore;

a first pipe rotationally coupled to the flange, the first pipe fluidically coupled to the wellhead and rotational about a longitudinal axis of the first pipe; and

a second pipe comprising a first portion disposed concentrically inside the first pipe and a second portion disposed outside the first pipe, the second pipe movable along the longitudinal axis with respect to the first pipe, the second pipe fixed and fluidically coupled to a production tree fluidically coupled, through the wellhead telescopic adaptor assembly, to the wellhead, the second pipe fixed to the production tree such that moving the second pipe moves the production tree along the longitudinal axis, the second pipe rotationally fixed to the first pipe such that rotating the first pipe rotates the production tree about the longitudinal axis of the first pipe to change a radial position of the production tree with respect to the wellhead.

12. The wellhead telescopic adaptor assembly of claim 11, further comprising a sealing flange disposed between a coupling end of the second pipe and a distal end of the first pipe opposite a second end rotationally coupled to the flange attached to the wellhead, the sealing flange rotationally fixed to the first pipe and the second pipe and comprising an O-ring configured to form a fluid seal with the first and second pipe to prevent fluid from leaking through the telescopic adaptor.

13. The wellhead telescopic adaptor assembly of claim 11, further comprising an interior flange extending inwardly from an inner surface of the first pipe, the interior flange configured to support an end of the second pipe when the second pipe is retracted.

14. The wellhead telescopic adaptor assembly of claim 11, wherein the first pipe comprises a coupling flange extending from a rim of the first pipe, the rim supported on the wellhead, the coupling flange engaged with the flange attached to the wellhead to allow rotation of the first pipe with respect to the flange attached to the wellhead.

15. The wellhead telescopic adaptor assembly of claim 14, wherein the rim of the first pipe comprises an O-ring configured to form a fluid seal with the wellhead to prevent fluid from leaking through a joint between the first pipe and the wellhead.

16. The wellhead telescopic adaptor assembly of claim 11, further comprising an O-ring disposed between an inner surface of the first pipe and an outer surface of the second pipe to form a fluid seal between the first and second pipe to prevent fluid from leaking through a gap defined between the inner surface of the first pipe and the outer surface of the second pipe.

17. The wellhead telescopic adaptor assembly of claim 11, wherein the second pipe comprises a coupling flange extending from a rim of the second pipe and attached to a flange of the production tree.

18. The wellhead telescopic adaptor assembly of claim 17, further comprising a plurality threaded studs extending through a plurality of respective holes of the coupling flange and the flange of the production tree to rotationally fix the second pipe to the production tree, the plurality of threaded studs extending through respective holes of a second coupling flange extending from a second rim of the first pipe to rotationally fix the second pipe to the first pipe, and wherein moving the second pipe along the longitudinal axis comprises turning a plurality of bolts of the respective threaded studs, the plurality of bolts disposed between the coupling flange of the second pipe and the second coupling flange of the first pipe.

19. The wellhead telescopic adaptor assembly of claim 11, wherein the flange attached to the wellhead is attached to a top flange of a tubing spool of the wellhead and wherein the second pipe is attached to a bottom flange of a valve of the production tree.

20. A telescopic adaptor assembly comprising:

a first flange attached to a first fluid outlet of a first surface;

a first pipe rotationally coupled to the first flange, the first pipe fluidically coupled to the first fluid outlet and rotational about a longitudinal axis of the first pipe; and

a second pipe comprising a first portion disposed concentrically inside the first pipe and a second portion disposed outside the first pipe, the second pipe movable along the longitudinal axis with respect to the first pipe, the second pipe fixed and fluidically coupled to a second fluid outlet of a second surface, the second fluid outlet fluidically coupled, through the telescopic adaptor assembly, to the first fluid outlet, the second pipe fixed to the second fluid outlet such that moving the second pipe moves the second surface along the longitudinal axis with respect to the first surface, the second pipe rotationally fixed to the first pipe such that rotating the first pipe rotates the second surface about the longitudinal axis of the first pipe with respect to the first surface.

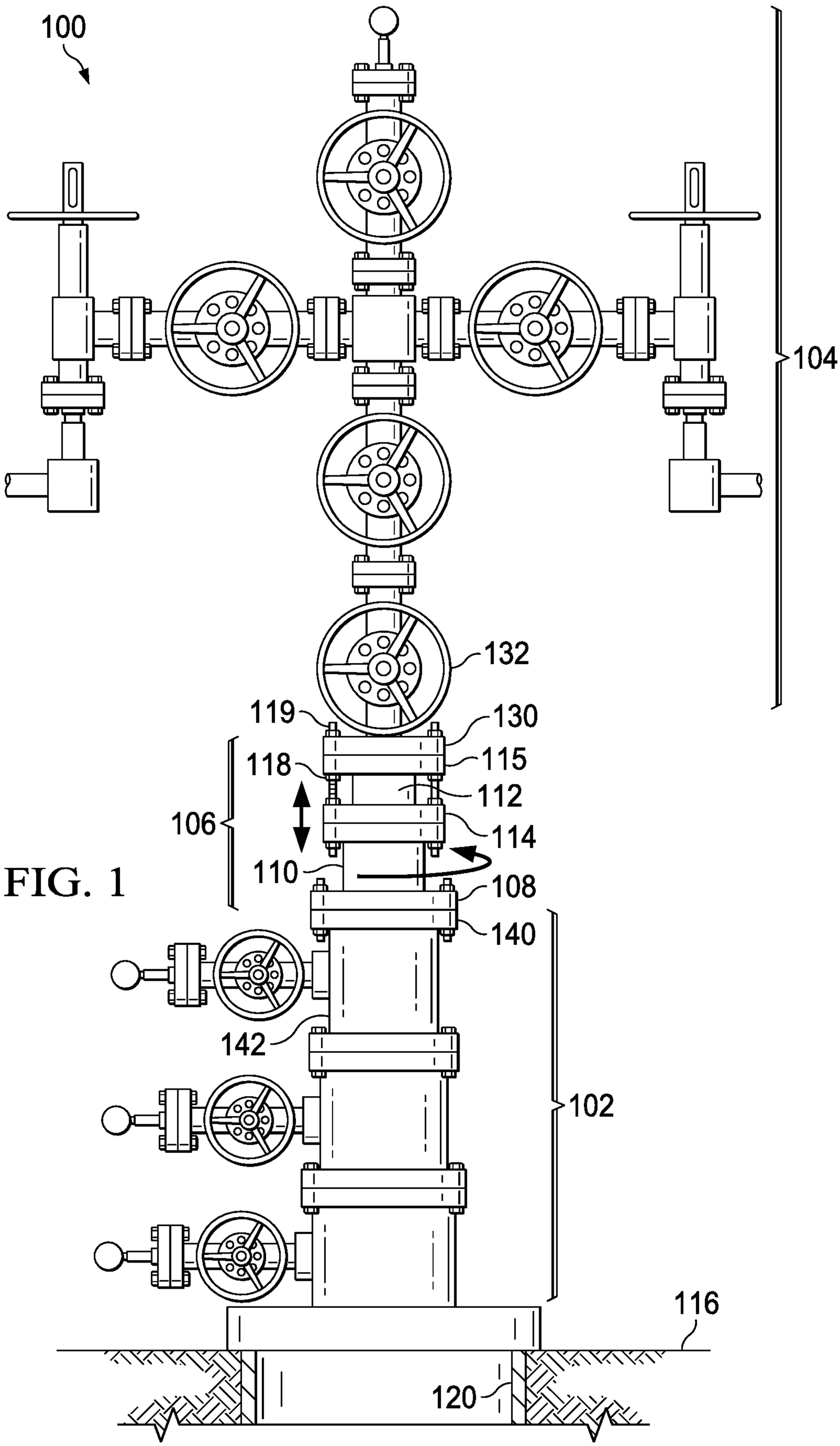
100
104
132
119
130
118
115
112
106
114
110
108
140
142
102
116
120

FIG. 1

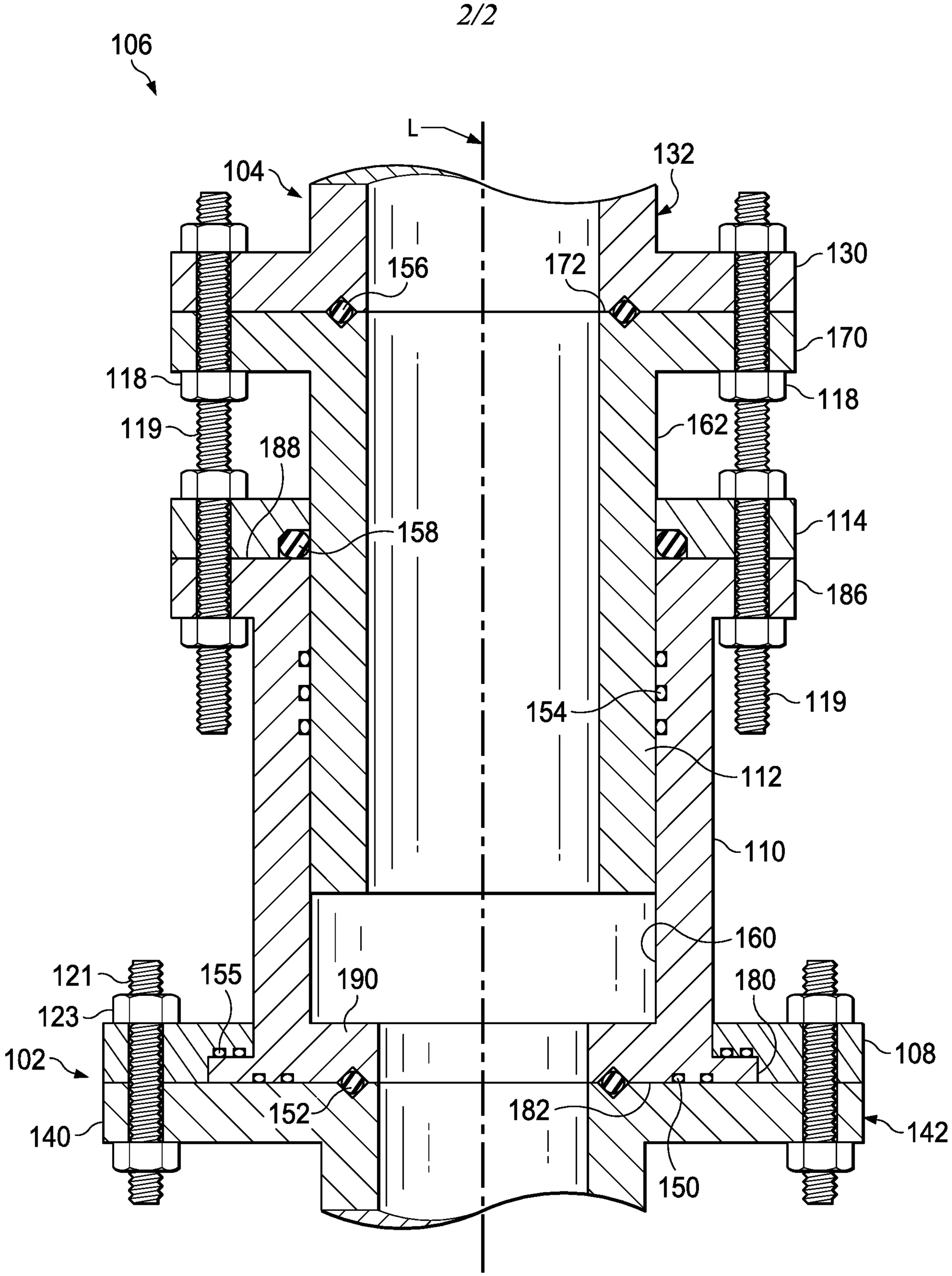
106
L
104
132
156
172
130
170
118
119
188
162
158
114
186
154
112
110
160
121
155
190
180
123
102
108
152
182
140
142
150

FIG. 2

INTERNATIONAL SEARCH REPORT

International application No
PCT/US2020/059055

A. CLASSIFICATION OF SUBJECT MATTER
INV. E21B33/03 E21B33/038
ADD.

According to International Patent Classification (IPC) or to both national classification and IPC

B. FIELDS SEARCHED

Minimum documentation searched (classification system followed by classification symbols)
E21B

Documentation searched other than minimum documentation to the extent that such documents are included in the fields searched

Electronic data base consulted during the international search (name of data base and, where practicable, search terms used)
EPO-Internal

C. DOCUMENTS CONSIDERED TO BE RELEVANT

Category*	Citation of document, with indication, where appropriate, of the relevant passages	Relevant to claim No.
A	US 9 441 441 B1 (HICKIE BARTON [US]) 13 September 2016 (2016-09-13) fig.1, fig.3, fig.6D, fig.9A-9C; col.2, lines 46-62; col.4, lines 32-67 to col.5, lines 1-25; col.9, lines 28-50 -----	1-20
A	US 2007/114039 A1 (HOBDY MILES A [US] ET AL) 24 May 2007 (2007-05-24) the whole document -----	1-20
A	US 2018/058167 A1 (FINOL JAVIER ADOLFO GARCIA [CA] ET AL) 1 March 2018 (2018-03-01) the whole document -----	1-20

☐ Further documents are listed in the continuation of Box C.

☒ See patent family annex.

* Special categories of cited documents :

"A" document defining the general state of the art which is not considered to be of particular relevance

"E" earlier application or patent but published on or after the international filing date

"L" document which may throw doubts on priority claim(s) or which is cited to establish the publication date of another citation or other special reason (as specified)

"O" document referring to an oral disclosure, use, exhibition or other means

"P" document published prior to the international filing date but later than the priority date claimed

"T" later document published after the international filing date or priority date and not in conflict with the application but cited to understand the principle or theory underlying the invention

"X" document of particular relevance; the claimed invention cannot be considered novel or cannot be considered to involve an inventive step when the document is taken alone

"Y" document of particular relevance; the claimed invention cannot be considered to involve an inventive step when the document is combined with one or more other such documents, such combination being obvious to a person skilled in the art

"&" document member of the same patent family

Date of the actual completion of the international search	Date of mailing of the international search report
4 February 2021	15/02/2021

Name and mailing address of the ISA/	Authorized officer
European Patent Office, P.B. 5818 Patentlaan 2 NL - 2280 HV Rijswijk Tel. (+31-70) 340-2040, Fax: (+31-70) 340-3016	Patrascu, Bogdan

INTERNATIONAL SEARCH REPORT

Information on patent family members

International application No
PCT/US2020/059055

Patent document cited in search report	Publication date	Patent family member(s)	Publication date
US 9441441 B1	13-09-2016	US 9441441 B1	13-09-2016
		US 2017081935 A1	23-03-2017
US 2007114039 A1	24-05-2007	US 2007114039 A1	24-05-2007
		WO 2007062329 A2	31-05-2007
US 2018058167 A1	01-03-2018	CA 2978019 A1	28-02-2018
		US 2018058167 A1	01-03-2018