(No Model.)

J. V. GOORDMAN.

PEDAL FOR PIANOS.

No. 456,088. Patented July 14, 1891.

Fig. 1.

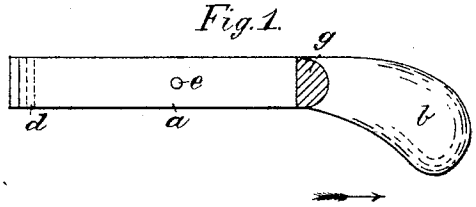

Fig. 5.

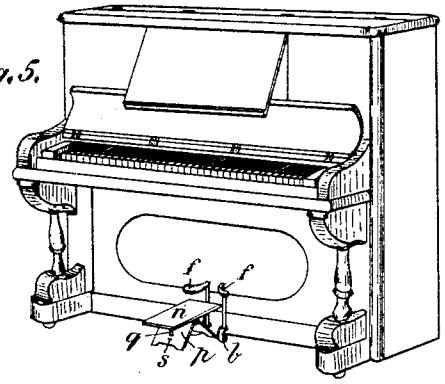

Fig. 2

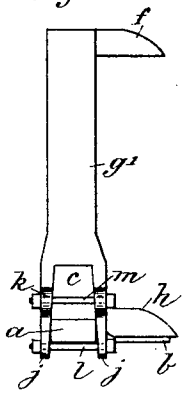

Fig. 3.

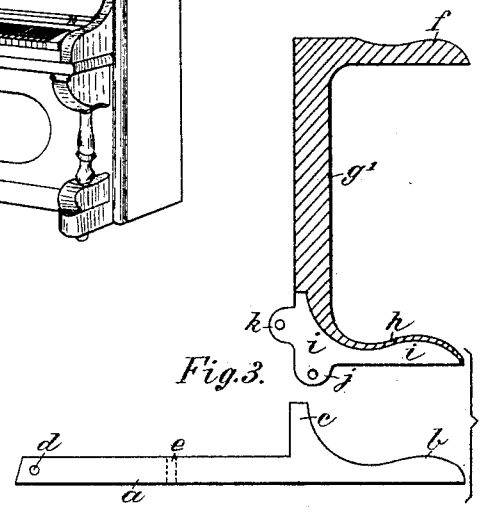

Fig. 4.

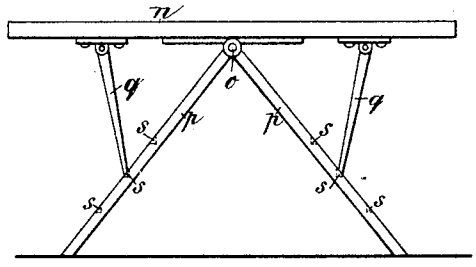

Witnesses:
Ernst Lundgren
C. J. Morgan

Inventor:
Johan V. Goordman
By A. P. Thayer atty.

THE NORRIS PETERS CO., PHOTO-LITHO., WASHINGTON, D. C.

UNITED STATES PATENT OFFICE.

JOHAN V. GOORDMAN, OF BROOKLYN, NEW YORK.

PEDAL FOR PIANOS.

SPECIFICATION forming part of Letters Patent No. 456,088, dated July 14, 1891.

Application filed November 4, 1890. Serial No. 370,289. (No model.)

To all whom it may concern:

Be it known that I, JOHAN VICTOR GOORDMAN, a citizen of the United States, and a resident of Brooklyn, in the county of Kings and State of New York, have invented a new and useful Improvement in Pedals for Pianos and other Instruments, of which the following is a specification.

My invention consists in an improved contrivance of pedals with duplex tread-pieces, whereby they are alike adapted in the height of the tread for adults and children without hinderance to either, and it includes, in addition thereto, a foot-rest bench of novel construction for children, so that children too small to work the ordinary pedals may work these as conveniently as full-grown people, all as hereinafter fully described, reference being made to the accompanying drawings, in which—

Figure 1 is a transverse section of the pedal. Fig. 2 is an end elevation of the pedal. Fig. 3 is a side elevation of the pedal of Fig. 2 with the parts detached and the upper part in vertical section. Fig. 4 is a side elevation of the foot-rest bench for the use of children, in combination with my improved pedal; and Fig. 5 is an elevation of a piano in perspective view, showing the application of my improved pedals and foot-rest.

The ordinary pedal is represented in Figs. 2 and 5, *a* being the bar, *b* the tread, and *c* the toe-check.

d indicates the pivot-hole, and *e* the hole for fastening the cord or wire by which the stops are connected with the pedal.

I provide an additional tread *f* at a higher elevation for children by providing a separate standard *f*, having said tread, and also having a foot-piece *h*, having a cavity *i* in the under side shaped in conformity with the upper side of the tread and the toe-check, with ears *j* projecting down the sides of the bar and other ears *k* projecting back of the toe-check at the sides suitably for being fastened by the clamp-bolts *l* and *m*, which will in practice be tapered, so as to draw the parts tight when driven in. The nuts shown may be used or not, as preferred. This construction enables the ordinary pedals to be readily converted to the duplex form and has the advantage of substantial lateral stay by the cavity fitting the toe-piece, besides being able to remove the upper tread when not needed for use. The standards *g* or *g'* may be made vertically extensible in any approved way.

To provide a foot-rest for the user of the upper pedal, I employ a bench or stand of variable height, for which I prefer to pivot it at the center of its length, or thereabout, as at *o*, to the top of the Λ-shaped supporting-standard *p*, the parts of which are also jointed together on said pivot, so as to be shifted freely closer together or farther apart, and provide the braces *q*, pivoted to the under side of the top and on opposite sides of the standard, respectively, suitably for setting the lower ends in the foot-rest sockets *s*, located at intervals along up and down in the sides of the standard to hold the top in various heights.

My improved pedal is alike applicable to organs and other musical instruments, and I do not limit myself as to the kind of instrument with which it is to be used.

I claim—

1. A duplex pedal for pianos and other musical instruments, having one tread in a higher position than the other and detachably connected thereto by the standard having the cavity fitted on the lower tread and toe-piece, and the ears projecting past the sides thereof and secured by the clamp-bolts extending through the ears and along the bottom of the lower tread and side of the toe-piece, respectively, substantially as described.

2. The combination, with a musical instrument, as a piano, of a duplex pedal having one tread in a higher position than the other, and a foot-rest stand having adjustable supports consisting of the legs jointed together and to the under side of the top of the stand and having the foot-rest notches for the braces, and said braces jointed to the under side of the top and in relation to the legs, all substantially as described.

In testimony that I claim the foregoing as my invention I have signed my name, in presence of two witnesses, this 18th day of October, 1890.

JOHAN V. GOORDMAN.

Witnesses:
W. J. MORGAN,
W. B. EARLL.