May 18, 1965 G. S. MOGILNER 3,183,912

DIATHERMY MACHINE

Filed May 31, 1962 2 Sheets-Sheet 1

Fig. 2.

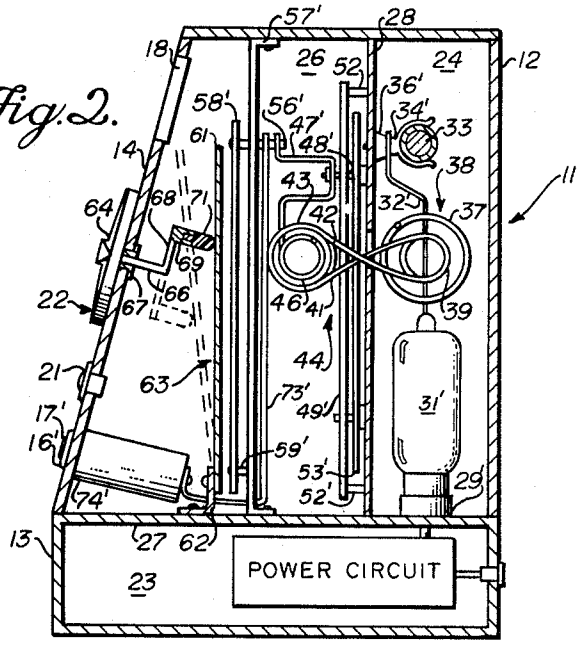

Fig. 1.

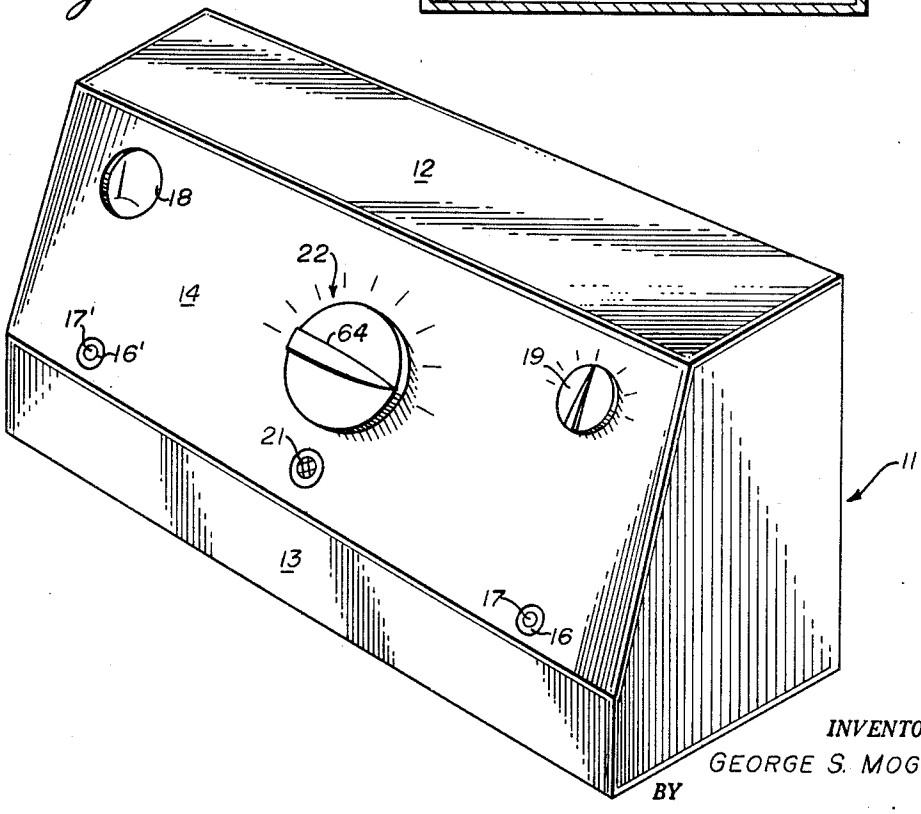

INVENTOR.
GEORGE S. MOGILNER
BY
Leonard Phillips
AGENT

May 18, 1965 G. S. MOGILNER 3,183,912

DIATHERMY MACHINE

Filed May 31, 1962 2 Sheets-Sheet 2

Fig. 3.

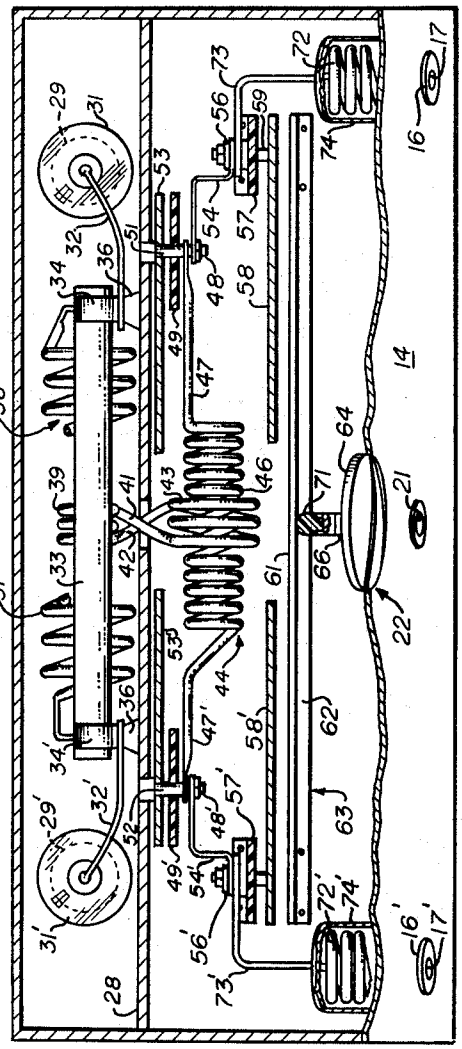

INVENTOR.
GEORGE S. MOGILNER
BY
Leonard Phillips
AGENT

United States Patent Office 3,183,912 Patented May 18, 1965

3,183,912

DIATHERMY MACHINE

George S. Mogilner, 2758 Whittier Blvd., Los Angeles, Calif.

Filed May 31, 1962, Ser. No. 198,891
4 Claims. (Cl. 128—421)

This invention relates to high-frequency dielectric apparatus, and more particularly to an improved tuning circuit for use in high-frequency diathermy machines.

Machines utilizing high-frequency electromagnetic waves have been extensively utilized in electro-therapeutics. Such machines are used to induce heat and spur circulation within the body tissues. Such diathermy units have been greatly improved in design and reduced in size in recent years with the result that they may be reliably operated from "house" current and may be easily moved about for use where it is most convenient. Thus not only are such machines used extensively in professional medical offices, but also are found in many homes.

The present invention provides small size, reliable diathermy device suitable for home application and moreover has a simplified tuning mechanism which is reliable and trouble-free in operation.

It is therefore an object of the invention to provide a small size diathermy unit.

Another object of the invention is to provide a novel tuning mechanism for use in high-frequency diathermy units.

Another object of the invention is to provide a simple tuning mechanism wherein the rotation of a dial alters and adjusts the linear distance between the plates of a tuning condenser.

Further objects and details of the invention will be set forth in the following specification as well as in the accompanying drawing in which:

FIGURE 1 is a perspective exterior view of the diathermy unit of the invention;

FIGURE 2 is a cross-sectional illustration of the invention; and

FIGURE 3 is a plan view of the invention.

With reference to the figures of the drawing, which serve to illustrate the features of the invention, the diathermy device 11 comprises a generally rectangular box-like housing 12 of a suitable material, such as sheet metal. Very importantly, however, it should be noted, with reference to FIGURE 1, that the front panel 13 of housing 12 has its upper portion 14 inclined at an angle to the rest of the front panel. This inclined portion 14 serves as the control panel for the diathermy device and includes insulated openings 16 and 16' which retain electrode jacks 17 and 17' therein. Similarly a power meter 18 is secured to the upper left hand portion of inclined panel 14, while a suitable clock timed switch 19 is affixed to the upper right-hand portion of panel 14. A pilot light 21 is set into the lower center portion of panel 14. Centrally positioned on panel 14 is power dial 22, whose operation and function will be more fully explained hereinafter.

The interior of housing 12 is compartmented into three major sections 23, 24 and 26. Section 23 comprises the entire bottom of housing 12 and is separated from sections 24 and 26 by floor 27. Section 24 comprises the entire upper rearward section of housing 12 and is separated from bottom section 23 by a portion of floor 27 and in turn separated from section 26 by wall 28 which extends from one side to the other of housing 12. Front section 26 includes the entire upper front portion of housing 12 and is separated from section 24 by wall 28 and from section 23 by part of floor 27. In addition, the interior of inclined panel 14 comprises the entire front wall of section 26. All of sections 23, 24 and 26 are entirely

enclosed by portions of the top, bottom, sides, front and back of housing 12.

For convenience of reference, section 23 of the housing 12 will be called the high-frequency power supply section, section 24 will be called the high-frequency circuit section, and section 26 will be called the tuned circuit and output section.

Referring to high-frequency circuit section 24, there is illustrated sockets 29 and 29' which are fixed into suitable holes in floor 27. High frequency tubes 31 and 31' are set into sockets 29 and 29' respectively. Tubes 31 and 31' are conventional high-frequency power tubes which are commercially available. The output terminals of tubes 31 and 31' are connected by copper straps 32 and 32' to capacitor 33 which is held in suitable clips 34 and 34' affixed to insulators 36 and 36' screwed into wall 28. Capacitor 33 is held in electrical parallel relation to the primary coil 37 of high-frequency power transformer 38. All of the high-frequency circuit components are maintained at suitable distances from the walls of section 24 so as to prevent arcing of high-frequency current to the housing.

Lower power supply section 23 contains suitable electrical components (not shown) to lead line current from a line cord (not shown) to high-frequency tubes 31 and 31'. The line cord is fitted with a suitable terminal for connecting the diathermy device to a house current socket. Also included in power section 23 are the necessary leads and electrical components to respond to the signal from timer-switch 19, so that the unit will be operated in response to the desires of the person using the diathermy device. In addition a suitable house power transformer is provided in section 23 as well as leads to pilot light 21 and power meter 18. The associated capacitors, inductances, and ground connections for the aforesaid light, switch, and meter are also compartmented in section 23. However all such components and circuitry are conventional and well-known in the art and will therefore not be further explained herein.

Referring one again to high-frequency power section 24, a high-frequency transformer secondary loop 39 extends from wall 28 and is interleaved with the turns of primary coil 37. Secondary loop 39 is supported on wall 28 by spaced leads 41 and 42. Lead 41 is electrically grounded to wall 28 while lead 42 passes thru wall 28 and is electrically insulated therefrom. Both leads 41 and 42 extend thru wall 28 and emerge into tuned circuit section 26.

With reference to tuned circuit and output section 26, leads 41 and 42 are connected to the ends of loop 43 which forms the primary coil of high-frequency stepping transformer 44. Primary loop 43 is passed about the turns of secondary coil 46 of transformer 44. Secondary coil 46 extends horizontally from side to side within section 26 and is maintained in fixed spaced relation away from wall 28 by leads 47 and 48' which extend from either end of coil 46. Leads 47 and 47' are in turn connected to pins 48 and 48' mounted on upright insulating support members 49 and 49', respectively.

Both ends of insulating support members 49 and 49' are spaced apart from wall 28 by suitable spacing extensions 51, and a cooperating extension (not shown), 52 and 52'. Both upright supports 49 and 49' are spaced from wall 28 a sufficient distance to permit room for mounting condenser plates 53 and 53' therebetween. Condenser plates 53 and 53' are mounted upon insulating supports 49 and 49' respectively. They are mounted in the same vertical plane and are laterally spaced from one another. However condenser plate 53 is electrically connected to lead 47 of secondary coil 46 thru pin 48, while condenser plate 53' is electrically connected

to lead 47' of coil 46 through pin 48'. Since both plates 53 and 53' are in fixed parallel relation to wall 28, wall 28 serves as the grounded member in completing the condenser circuits. The condensers are thus in parallel electrical connection with secondary coil 46.

Electrical leads 54 and 54' extend from pins 48 and 48', respectively, and are connected to pins 56 and 56' which are secured to and pass thru upright insulating support members 57 and 57' respectively. Insulating members 57 and 57' extend from floor 27 of the housing, vertically within section 26 to the top of housing 12. The members are secured to the floor and top of the housing by suitable angle means, whereby said members are held in a rigid vertical position.

Tuning condenser plates 58 and 58' are attached to the ends of pins 56 and 56', respectively, opposite from leads 54 and 54'. Condenser plates 58 and 58' are essentially rectangular in shape and are held fixed in the vertical position and are spaced apart from one another and upright supports 57 and 57' by standoffs surrounding pins 56 and 56' and by spacers 59 and 59' attached to the lower positions of the condenser plates and to upright members 57 and 57'. Thus condenser plates 58 and 58' are electrically insulated from the chassis, but are connected electrically in parallel to condenser plates 53 and 53' and to secondary coil 46.

Large rectangular plate 61 forms the grounded portion of the tuning condenser. Plate 61 is held in condenser relationship to condenser plates 58 and 58' by an angled spring bronze support 62. Spring bronze support 62 is attached to the bottom edge of condenser plate 61 by suitable means, e.g., spot welds, and in turn is fixedly connected to floor 27 by a suitable hold-down strip and screw means. However spring bronze support 62 is free to operate upon condenser plate 61 and to spring bias it in a direction away from condenser plates 58 and 58' as shown by the dotted position of plate 61. Spring bronze support 62 also serves to ground plate 61 to the chassis of the diathermy unit. Additionally, bronze support 62 serves an extremely important function in providing a fully flexible grounding means for condenser plate 61. Thereby sliding contacts or bearing contacts as commonly found in variable condensers are eliminated.

Tuning condenser 63 comprising plate 61 and plates 58 and 58' is tuned by positioning condenser plate 61 at varying angular distances away from plates 58 and 58'. The position of plate 61 is selected by the operator on power dial 22, previously mentioned. More specifically, power dial 22 has a handle-pointer 64 which is retained on the end of a shaft 66 extending through panel 14. Shaft 66 is positioned in panel 14 by a suitable bearing 67 and is equipped with stops whereby shaft 66 is permitted to rotate thru an angle of 180°. Due to the described construction of condenser 63 the entire device 11 is constructed with minimum front-to-back depth. In addition, since the sole mounting point of condenser plate 61 is floor 27 no other means are necessary to hold plate 61 in relation to plates 58 and 58'. Since no other elements are introduced between the condenser plates, the condenser 63 produces a low minimum capacity, thus giving the biggest change in capacity from minimum to maximum plate spacing, which is essential for tuning.

On the opposite side of panel 14 from handle-pointer 64, shaft 66 extends into the tuned circuit and output section 26 of housing 12. Shaft 66 terminates in a right angled arm 68. Arm 68, in turn, terminates in a right angled extension 69. Extension 69 comprises a short length of hollow tubing into which insulating finger 71 is tightly fitted. Finger 71, in turn, bears against condenser plate 61. Finger 71 is preferably made from a high dielectric plastic material, e.g., fluorocarbon plastics such as Teflon. Such material has very low friction combined with high electrical insulating properties.

Arm 68 is fixed on the end of shaft 66 such that it is positioned in the vertically downward position when handle-pointer 64 is rotated 180° to its upper limit on dial 22.

It should be especially noted that since panel 14 is inclined from the vertical, shaft 66 is inclined downwardly as it passes thru panel 14 into section 26. Thus the tip of finger 71 which is rigidly fixed to extension 69, upon movement of pointer 64, describes an arc in space which is in a plane parallel to panel portion 14. Since panel portion 14 is inclined from the vertical, the effect is to produce a front-to-back "throw" in finger 71 as it describes the arc.

As noted previously, spring bronze support 62 is biased to force condenser plate 61 away from plates 58 and 58', i.e., towards front panel 14. Thus, spring bronze support 62 also forces plate 61 into constant contact with insulating finger 71. It can be seen, then, that by suitably rotating handle-pointer 64, finger 71 will slideably-rotate against condenser plate 61 and force it into any desired angled position with respect to condenser plates 58 and 58'.

The angle of panel 14, and the lengths of shaft 66, arm 67 and extension 69 is selected such that when handle-pointer 64 is dialed full scale, and arm 67 is thereby in the vertically upward position, finger 71 forces condenser plate 61 into parallel relationship to condenser plates 58 and 58'. In this position, then, tuning condenser 63 has its highest capacity.

Similarly, when handle pointer 64 is rotated to the zero position, arm 67 is in the vertically downward position, and spring support 62 will force plate 61 into an angled position farthest away from plates 58 and 58'. At this point, tuning condenser 63 has its lowest capacity.

By such simple means, the entire tuned circuit of diathermy unit 11 can be suitably adjusted and the power output therefrom can be regulated.

Pins 56 and 56' are connected to one end of output coils 72 and 72' by leads 73 and 73'. The other ends of output coils 72 and 72' are connected to electrode jacks 17 and 17', respectively. Output coils 72 and 72' are supported by suitable insulating means secured to panel portion 14. Electrode jacks 17 and 17' are similarly supported by suitable insulating means. Boxlike shields 74 and 74' surround output coils 72 and 72', but are suitably insulated therefrom and from housing 12. Shields 74 and 74' further effect a small capacity with output coils 72 and 72', respectively. This small capacity filters out all harmonics of the fundamental frequency which the fundamental frequency produces in the output radio-frequency circuit.

Electrode jacks 17 and 17' are conventional jacks and furnish connection to electrode leads and electrodes (not shown) which are common in the diathermy art.

Thus the user can adjust the power output of the diathermy unit by means of dial-handle 64 and select the duration of treatment by adjusting clock timed switch 19. The diathermy unit is plugged into a house current outlet by means of a power cord (not shown).

What is claimed is:

1. A diathermy unit for producing electro-therapeutic high frequency waves comprising a generally box-like housing, said housing interiorly compartmented into a high-frequency power supply section, a high-frequency circuit section and a tuned circuit output section; power supply means positioned in said power supply section; high-frequency generating means positioned in said high-frequency circuit section electrically connected to said power supply means, a high-frequency tuned circuit comprising a high-frequency transformer, a condenser, and a tuning condenser all electrically connected and positioned in said tuned circuit output section and electrically connected to said high frequency generating means; said tuning condenser comprising at least one condenser plate fixed in a vertical transverse position in said output sec-

tion in said housing and a moveable condenser plate held in face to face relationship with said fixed plate, a resilient spring member supporting said moveable condenser plate at one of its edges whereby said plate is moveable in swinging relationship to said fixed plate; an inclined control panel forming the front portion of said housing; a manually controlled rotatable shaft retained at one of its ends in said front panel and extending into said output section at an angle normal to said panel; a control knob affixed to the end of said shaft exterior to said panel; a right-angled contacting arm rigidly affixed to the other end of said shaft and contacting said moveable condenser plate in rotatable-sliding relationship, and output terminals connected to said high frequency tuned circuit whereby high frequency waves are applied exteriorly of said diathermy unit.

2. The diathermy unit of claim 1 wherein said right-angled arm has an insulated tip in sliding contact with said moveable condenser plate.

3. A diathermy unit for producing electro-therapeutic high-frequency waves comprising a box-like housing including an inclined front control panel with a manually operated power selector dial positioned centrally thereon; a rotatable shaft attached to said dial and extending interiorly of said housing, said shaft at right angles to the plane of said inclined front panel; an extension affixed to the interior end of the shaft and extending at an angle to the axis thereof; a co-centric contact finger rigidly supported at a distance from the shaft by said extension; a spring member mounted in said housing; a swingable tuning condenser plate supported by spring member to hold said condenser plate in spring-biased relationship against said contact finger; two condenser plates rigidly supported in side-to-side position within said housing and

in condenser relationship with said swingable condenser plate; output jacks electrically connected to said rigid condenser plates; a high-frequency transformer and condenser connected in electrical parallel with said rigid tuning condenser plates; at least one high-frequency power tube connected to the primary coil of said transformer; and power means connected to said high-frequency power tube.

4. A condenser for tuning a high frequency electro-therapeutic device comprising a housing including a slanted panel thereon, a first condenser plate rigidly affixed within said housing, a second movable condenser plate held in face-to-face relationship with said first condenser plate, a resilient spring member supporting said second condenser plate at one edge thereof whereby said second plate is movable in swinging relationship to said first plate, a manually controlled rotatable shaft rigidly supported on and normally to said slanted panel and extending in a plane transverse to a plane in which said second condenser plate lies and wherein the axis of said shaft is at an angle with reespect to said second condenser plate, an angled contacting arm rigidly affixed to one end of said shaft proximate to said second condenser plate, and an electrically insulated tip on said arm and contacting the second condenser plate in rotatable-sliding relationship.

References Cited by the Examiner

UNITED STATES PATENTS

1,962,796	6/34	Wappler	128—422 X
2,589,351	3/52	Ehrlich	317—249
3,043,310	7/62	Milinowski	132—422

RICHARD A. GAUDET, *Primary Examiner.*

UNITED STATES PATENT OFFICE
CERTIFICATE OF CORRECTION

May 18, 1965

Patent No. 3,183,912

George S. Mogilner

It is hereby certified that error appears in the above numbered patent requiring correction and that the said Letters Patent should read as corrected below.

Column 2, line 40, for "one" read -- once --; line 56, for "48′" read -- 47′ --; column 5, line 31, after "by" insert -- said --; column 6, line 21, for "reespect" read -- respect --.

Signed and sealed this 23rd day of November 1965.

(SEAL)
Attest:

ERNEST W. SWIDER
Attesting Officer

EDWARD J. BRENNER
Commissioner of Patents