United States Patent [19]

Bateson et al.

[11] **3,820,747**

[45] **June 28, 1974**

[54] **TRUSS-TYPE CARGO-CARRYING VEHICLE**

[75] Inventors: **Norman E. Bateson,** Munster, Ind.; **William L. Pringle,** Grosse Pointe Shores, Mich.

[73] Assignee: **Pullman Incorporated,** Chicago, Ill.

[22] Filed: **Mar. 23, 1972**

[21] Appl. No.: **237,422**

Related U.S. Application Data

[62] Division of Ser. No. 65,461, Aug. 20, 1970, Pat. No. 3,675,592.

[52] **U.S. Cl.** ..... **244/118 R,** 244/137

[51] **Int. Cl.** **B64c 1/20**

[58] **Field of Search** ..... 244/118 R, 118 P, 119, 244/117 R, 127, 125, 137; 105/367, 368 R; 296/3

[56] **References Cited**

UNITED STATES PATENTS

2,183,323	12/1939	Moss	244/119
2,415,975	2/1947	Thomson	244/118 R
3,240,450	3/1966	Skarott	244/118 R
3,405,893	10/1968	Flamand et al.	244/119

OTHER PUBLICATIONS

Flight; Allward, Maurice F.; "Monocoques," pp. 94–95 1/25/45.

Primary Examiner—Duane A. Reger
Assistant Examiner—D. C. Butler
Attorney, Agent, or Firm—Richard J. Myers

[57] **ABSTRACT**

A truss structure includes upper and lower beams with vertical interconnecting beams on which cargo of any type may be suspended. The truss structure is adapted to be supported on horizontally spaced wheel suspensions, such as is common in over-the-highway vehicles, or it may be disposed in and be connected to structural components in aircraft wherein the truss structure supports the cargo and provides a primary structural component of both modes of transportation.

In a railway car a relatively narrow upright truss structure is supported at its opposite ends on trucks. The truss structure is provided at opposite ends with short sill sections which contain coupler housings supporting conventional couplers. At opposite ends of the truss structure horizontal stabilizing members extend laterally outwardly of the truss structure and are adapted to be connected to conventional single or double axle trucks in conventional fashion. The narrow truss structure is the sole structural support of the car and provides on opposite sides thereof, between the trucks, a free and unencumbered space to which ready access may be had by suitable powered handling devices which may lift cargo into position to be connected and suspended on opposite sides of said truss structure.

A modified embodiment comprises a railway car which includes a pair of truss sections which have outer ends supported on single axle trucks, and adjacent inner ends supported on double axle trucks by means of an articulated connector assembly.

7 Claims, 14 Drawing Figures

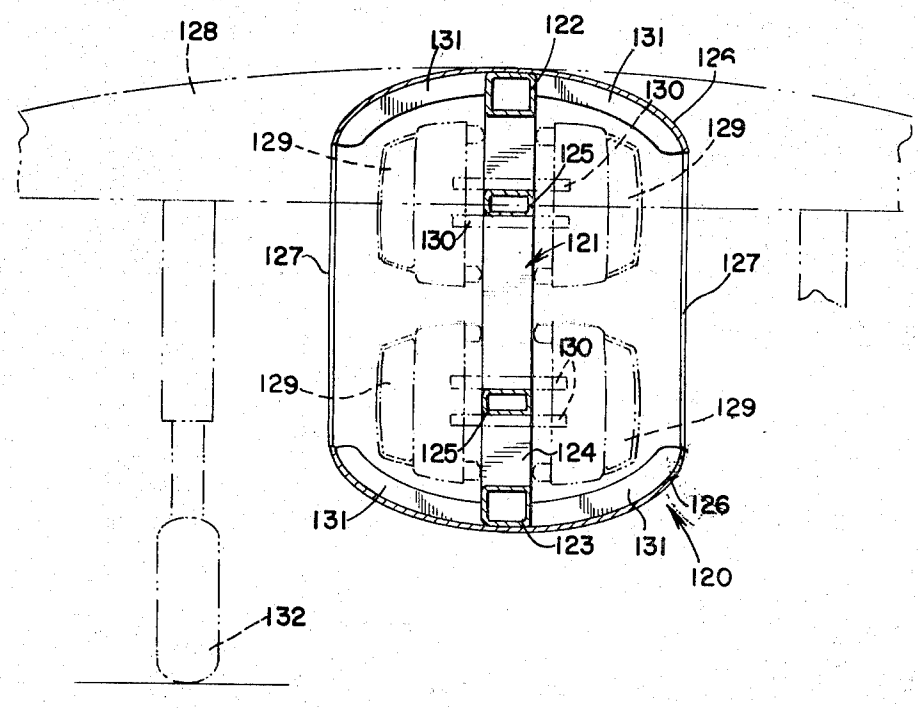

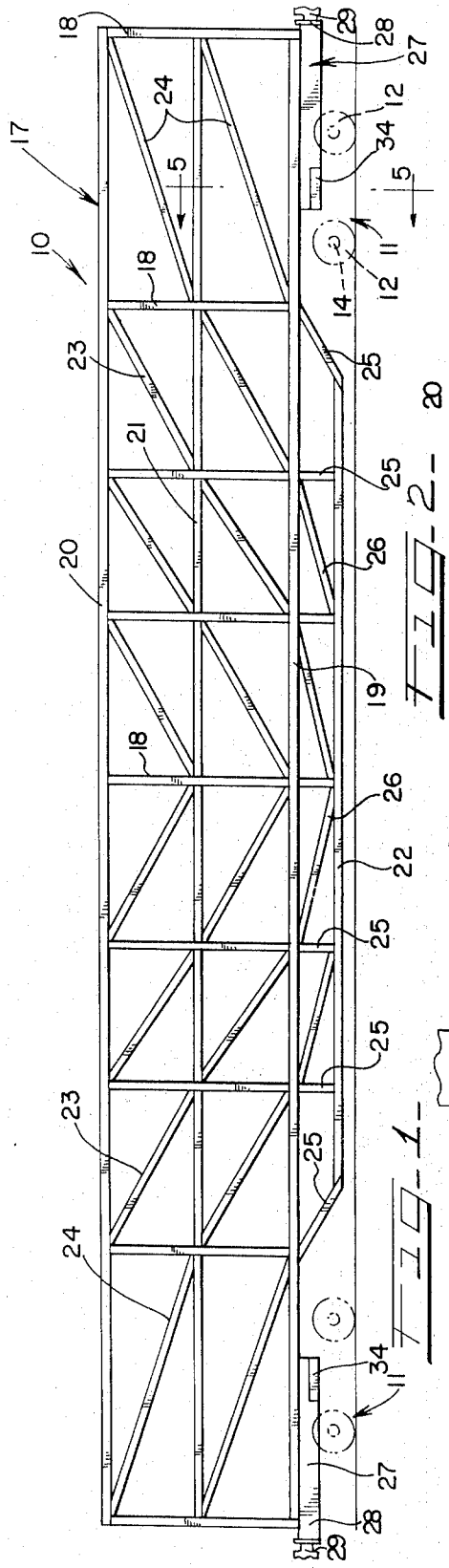

FIG. 1

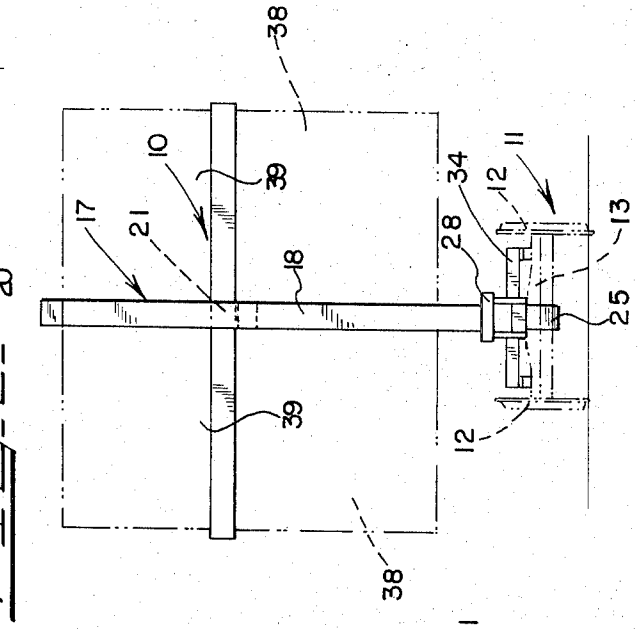

FIG. 2

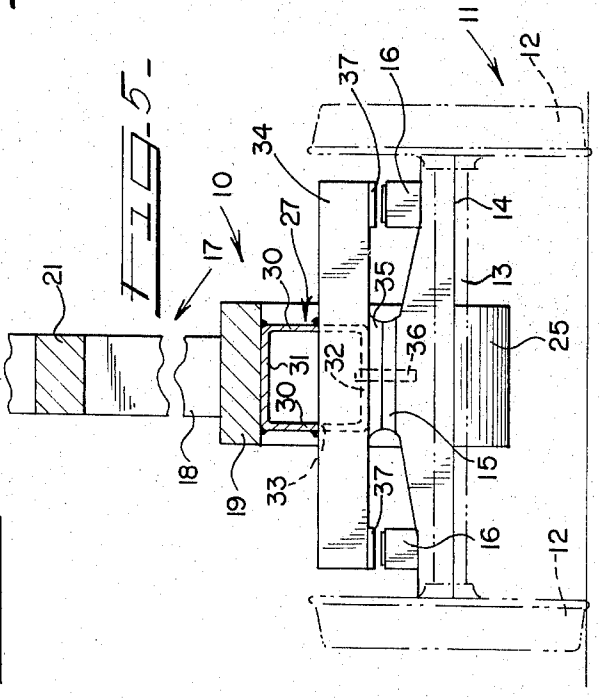

FIG. 5

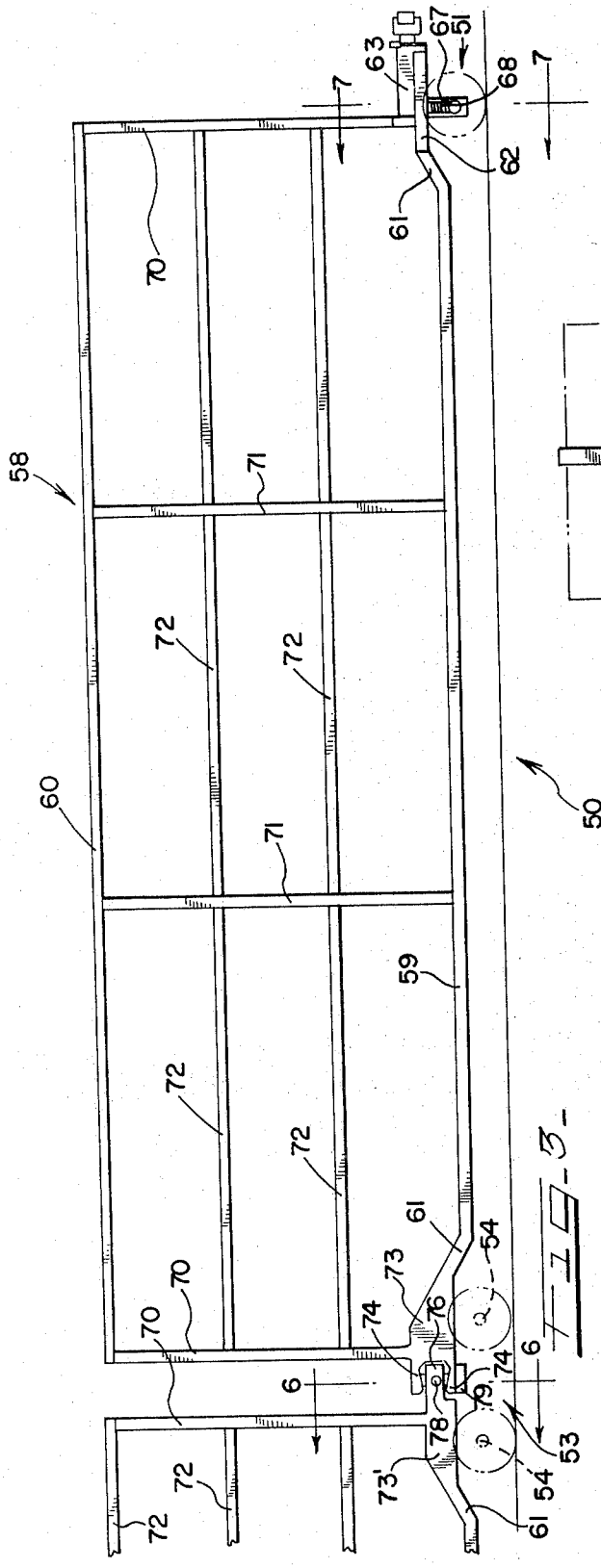
58
60
70
71
72
59
61
62
63
67
51
68
7
50
54
53
73
73'
74
76
78
79
6

FIG-3-

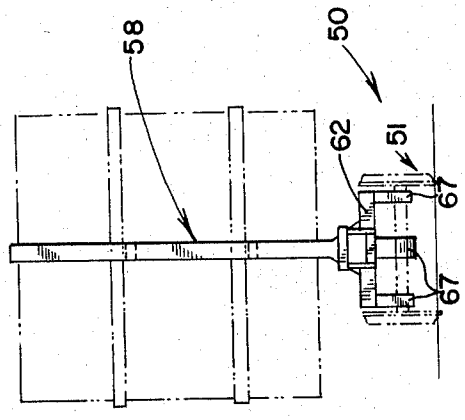
58
50
62
51
67

FIG-4-

FIG. 6

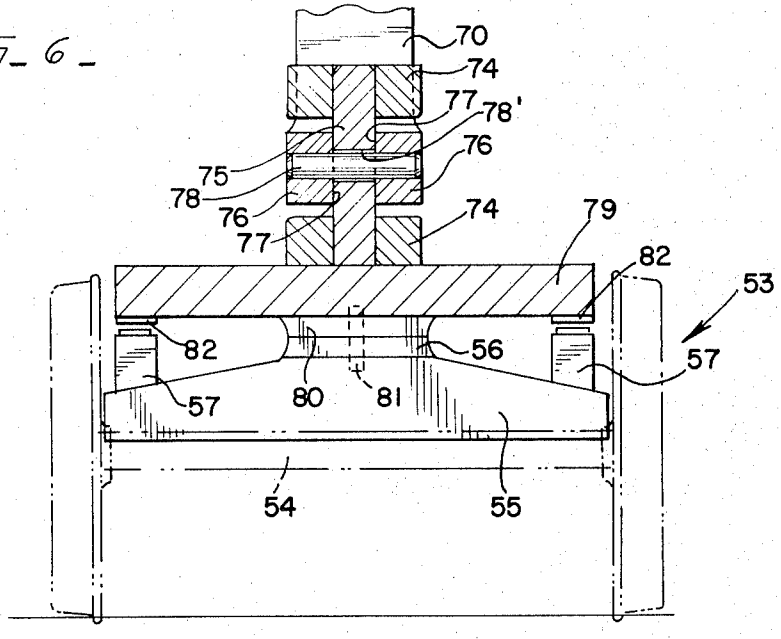
70
74
77
78'
76
75
78
76
77
74
79
82
53
82
56
57
57
80
81
54
55

FIG. 7

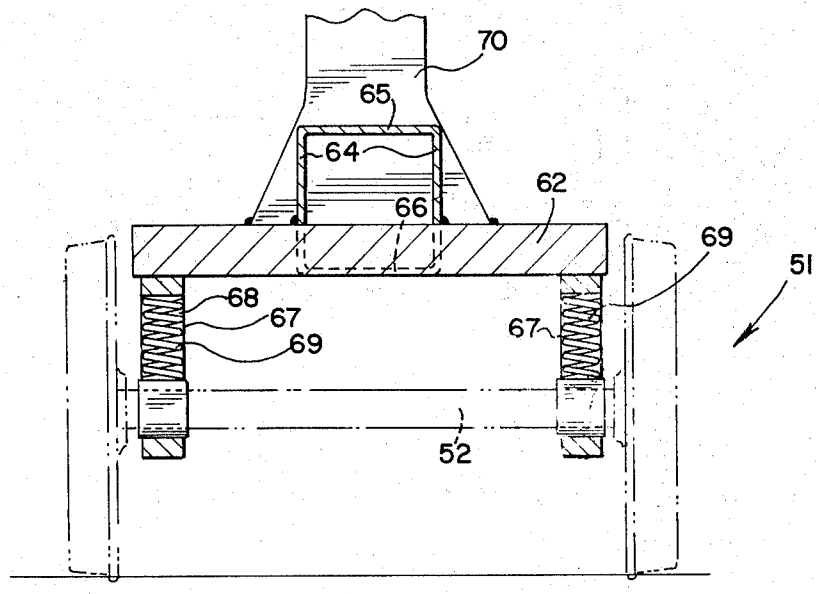
70
65
64
62
66
69
51
68
67
69
67
52

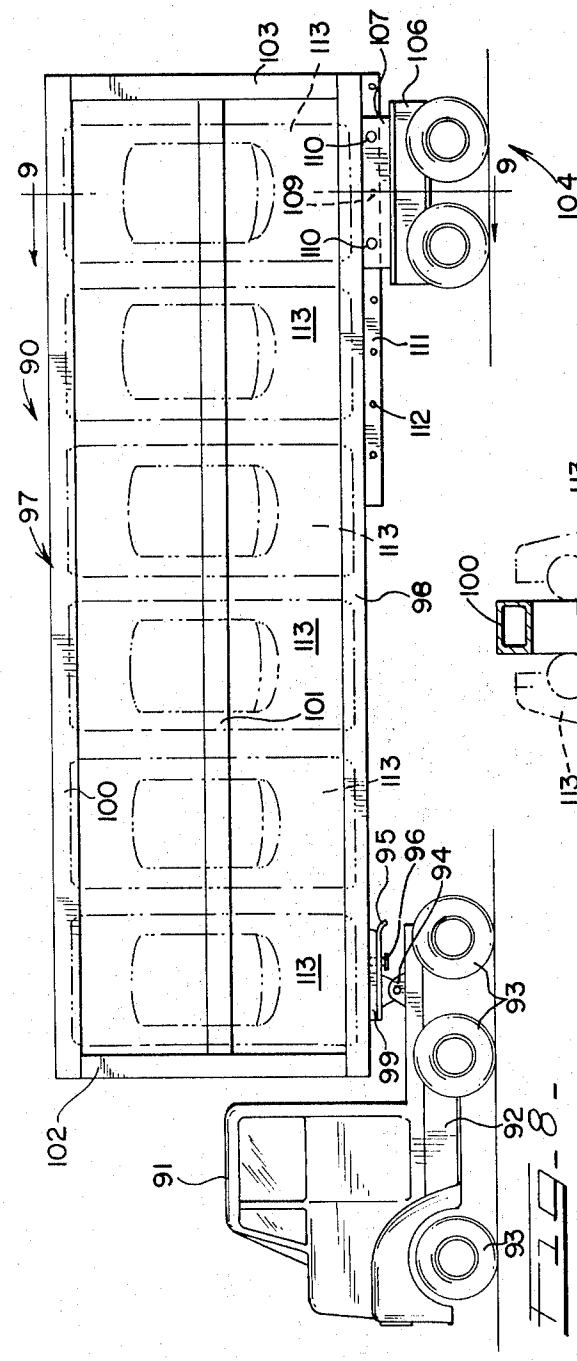
103
113
107
106
110
109
9
104
90
97
111
112
98
101
100
95
96
94
93
99
92
91
102

FIG. 8

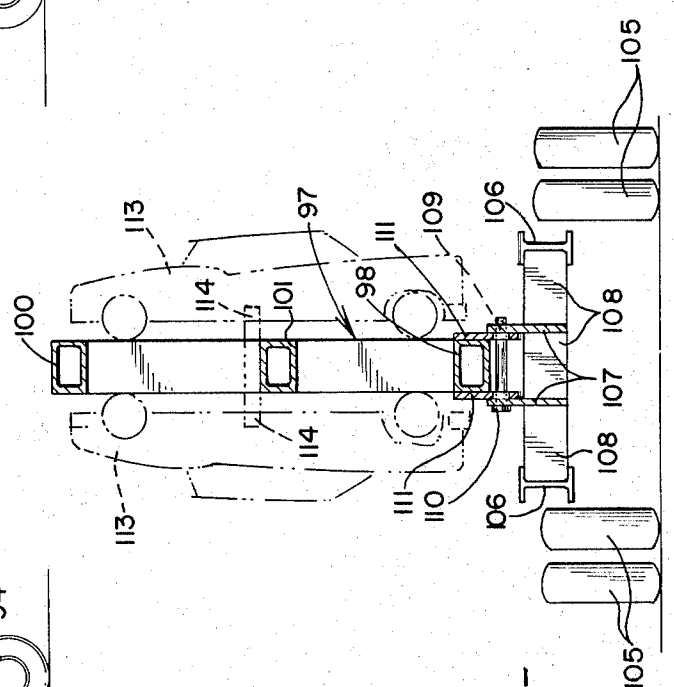
105
106
108
107
109
111
110
97
98
101
114
100
113

FIG. 9

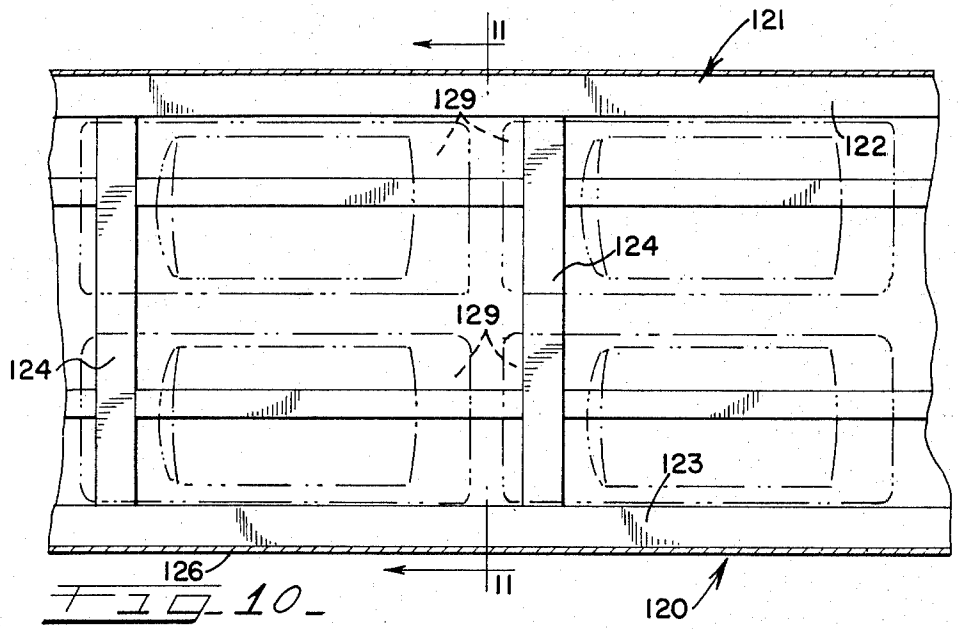
11
121
129
122
124
129
124
123
126
11
120

FIG. 10

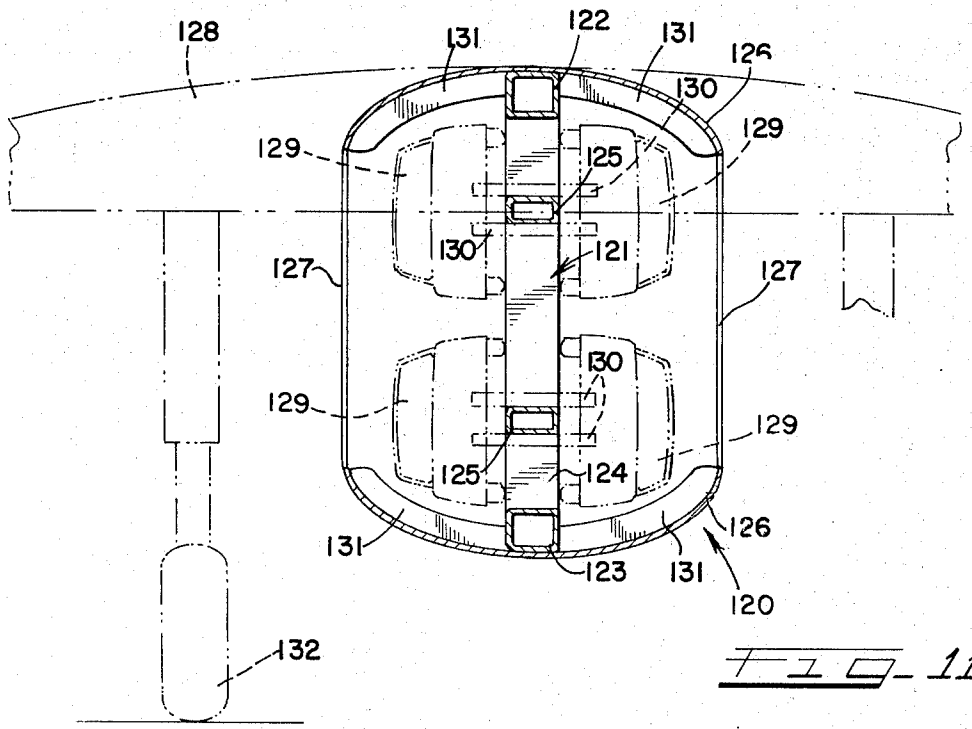
128
131
122
131
126
130
129
129
125
130
121
127
127
130
129
129
125
124
126
131
123
131
120
132

FIG. 11

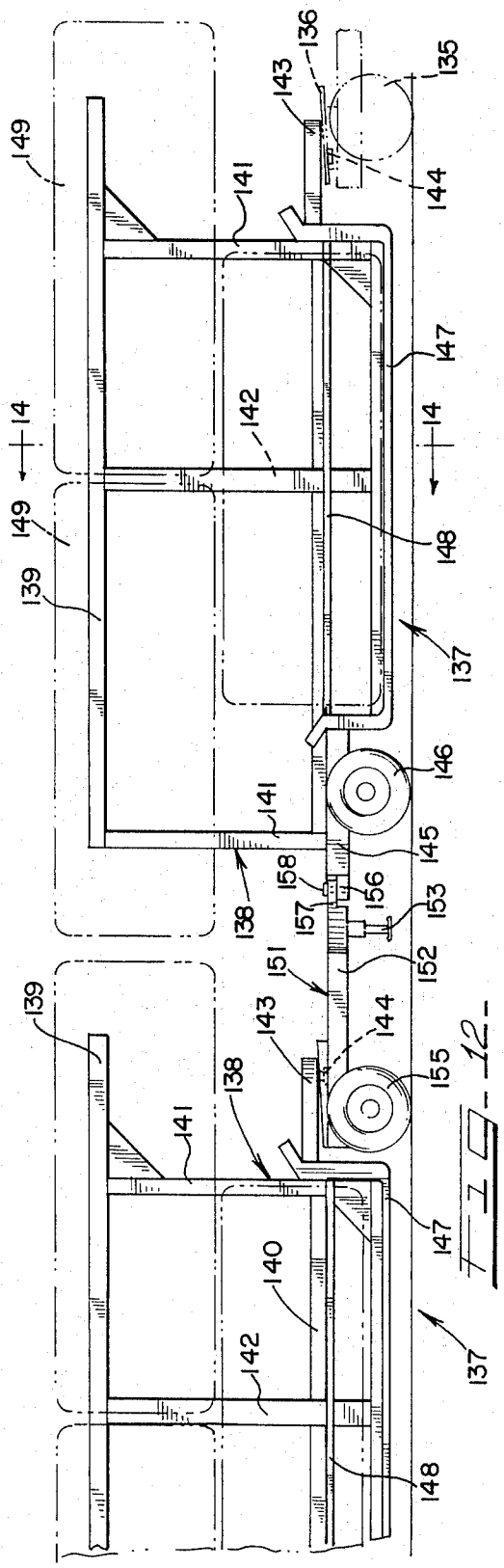
136
135
143
149
141
144
147
14
142
148
139
137
146
145
158
156
157
153
138
151
152
155

FIG. 12

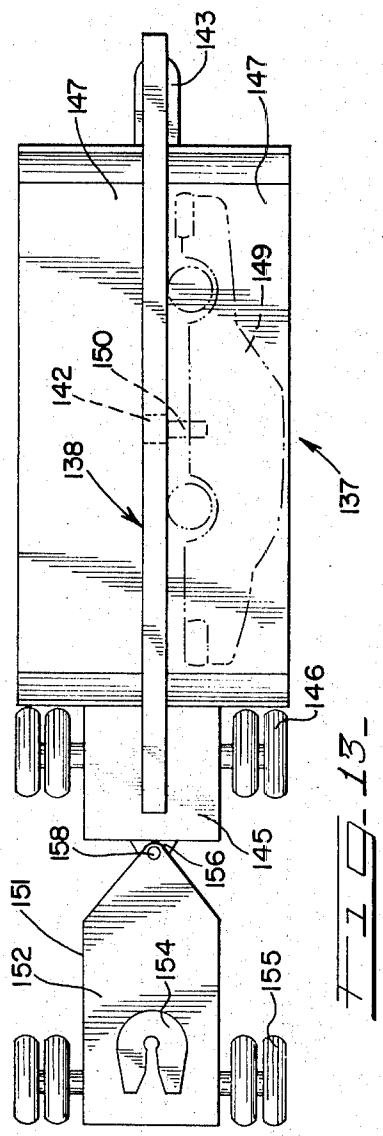
143
147
149
150
142
138
137
146
158
145
156
151
152
154
155

FIG. 13

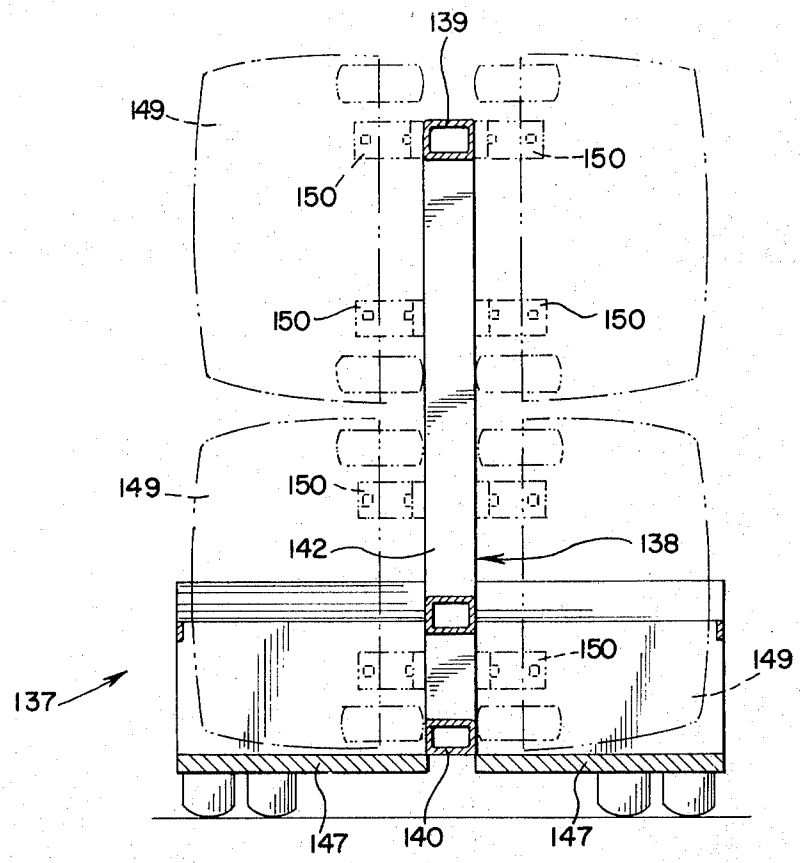

FIG. 14

TRUSS-TYPE CARGO-CARRYING VEHICLE

This is a division of co-pending patent application, Ser. No. 65,461 filed Aug. 20, 1970, of Norman E. Bateson and William L. Pringle now U.S. Pat. No. 3,675,592 issued July 11, 1972.

SUMMARY

The prime object of this invention is to provide an improved cargo carrier of simplified design wherein the primary structural member is an upstanding central longitudinal truss-type frame structure which is supported at its opposite ends on the wheels of a vehicle eliminating the usual and conventional deck or floor which also forms a structural part of the vehicle.

Another object of the invention is to provide a cargo carrier which includes a relatively narrow truss-like structure on which cargo is suspended, the said truss structure providing the primary structural support of a vehicle, such as a truck, trailer, or aircraft, and including a horizontal structural member projecting laterally outwardly of said truss structure to stabilize the same vertically.

The present invention, which includes the upstanding central frame structure, also includes at opposite ends thereof horizontally extending stabilizing members provided with center plate arrangements adapted to cooperate with car truck bolster center plates or vehicle suspensions in conventional fashion.

A central supporting framework comprises generally lower and upper longitudinally extending beams interconnected by suitable framing in the form of a truss or lattice-type structure. A railway car embodying this framework includes stub center sills supported on the horizontal stabilizing members which also include coupler housing adapted to contain conventional railway couplers.

The absence of any other laterally extending framework between the trucks of a railway car, or highway vehicle running gear, on the upstanding central frame structure provides for greater facility in loading and unloading and permits the cargo which may consist of containers or vehicles, etc., to be directly attached to, and suspended from, the truss structure of the frame. The invention may be utilized with the conventional two-axle trucks of a railroad car or may be combined with single-axle trucks disposed at opposite ends of the car, with the car comprising two individual articulated sections. Further, the truss structure may be placed on highway running gear and provide the primary structural component thereof or may provide the primary backbone or beam member of an aircraft fuselage or hull.

BRIEF DESCRIPTION OF THE DRAWINGS

FIG. **1** is a side elevational view of a railway car;

FIG. **2** is an end elevational view of the railway car shown in FIG. **1**;

FIG. **3** is a side elevational view of a modified railway car;

FIG. **4** is an end elevational view of a railway car shown in FIG. **3**;

FIG. **5** is a cross-sectional view taken along the line **5—5** of FIg. **1**;

FIG. **6** is a cross-sectional view taken along the line **6—6** of FIG. **3**;

FIG. **7** is a cross-sectional view taken along the line **7—7** of FIG. **3**;

FIG. **8** is a side elevational view of a highway trailer embodying the truss structure of the present invention;

FIG. **9** is a cross-sectional view taken along the line **9—9** of FIG. **8**;

FIG. **10** is a cross-sectional view through an airplane fuselage;

FIG. **11** is a cross-sectional view taken along the line **11—11** of FIG. **10**;

FIG. **12** is a side elevational view of another modified articulated trailer construction embodying the truss structure of the present invention;

FIG. **13** is a plan view of a portion of the trailer construction disclosed in FIG. **12**; and

FIG. **14** is a cross-sectional view taken along the line **14—14** of FIG. **13**.

DETAILED DESCRIPTION

Referring now particularly to FIGS. **1, 2,** and **5,** an improved railway car is generally designated by the reference character **10** which includes at opposite ends thereof conventional trucks **11.** Trucks **11** are of the two-axle type with wheels designated at **12** on axles **14.** Each truck **11** also includes a truck bolster **13** on which is carried a conventional center plate **15.** As shown in FIG. **5,** side or outer bearings or supports **16** are suitably provided on the bolster **13.**

The railway car **10** comprises primarily an upstanding central longitudinally extending truss or framing structure designated at **17** which includes a plurality of vertically extending horizontally spaced frame members **18.** The frame members **18** are suitably connected to a lower relatively narrow longitudinally extending beam **19** and the upper ends of the frame members **18** are suitably connected to a similar upper beam **20.** An intermediate horizontal beam **21** is suitably connected to the frame members **18** and the structure is rigidified by means of diagonal truss members **23** and **24.** The framing structure **17** also includes a depending structure comprising a longitudinal beam **22** disposed below the upper edges of the railway wheels **12** and is supported by means of depending frame members **25** suitably braced by diagonal truss members **26.** As best shown in FIG. **2,** the framing structure **17** being of a truss type is of relatively narrow configuration with no parts thereof extending laterally outwardly on opposite sides thereof. Thus a rigid central upstanding structure of great strength is provided which does not require any lateral extending members such as crossbearers, platform or deck, required in the conventional railroad car.

The longitudinal lower beam **19** of the truss structure **17** is connected at opposite ends thereof to short or stub length center sills **27** which are provided at their outer ends with open end coupler housing **28** adapted to contain conventional railroad couplers **29.** As best shown in FIG. **5,** each stub center sill **27** is provided with vertical side plates **30** connected to a top plate **31** and a bottom plate **32.** As best shown in FIGS. **1** and **5,** the rear end of each sill **27** is suitably recessed as indicated at **33** and has rigidly secured thereto a transverse stabilizing member **34** which may comprise one or more structural plates or elements and which includes a suitable center plate **35** adapted to cooperate with a center plate **15** on the bolster **13** in conventional

fashion. A conventional pin **36** projects from the stabilizing member **34** in conventional fashion through the center plates **15** and **35.** Each of the stabilizing members **34** also includes horizontally spaced bearing elements **37** adapted to cooperate with the side bearing **16** in conventional fashion.

The truss or framing structure **17** provides the sole support for cargo to be supported and suspended on the railway car **10.** As schematically shown in FIG. **2,** such cargo may consist of containers **38** carried on opposite sides of the truss structure **17** by suitable connecting bands or elements **39** which secure the containers directly to the framing members of the truss structure **17.** It is contemplated of course that the cargo can be of any type and the structure **17** is particularly adaptable for supporting vehicles which would merely be suspended from the sides of the framing structure by well-known tie-down or securing means. Any cargo which can readily be suspended may be carried by the railway car described.

Thus it can be seen that a greatly simplified truss structure forms the sole structural beam for carrying cargo which may be suspended on the said structure. Additional strength is obtained by the utilization of the depending longitudinal beam **22** and its associate framing truss members. The relatively narrow design permits a maximum width dimension of cargo to be suspended thereon which still is within the lateral limits specified by the A.A.R. Further, a deck structure having the usual structural capabilities is unnecessary and undesirable. With the present type of narrow frame structure, loading is greatly facilitated since loading devices may be moved substantially right up against the truss structure without interference. Crane loading is particularly facilitated. Further, the structural transverse stabilizing members **34** are of sufficient magnitude and strength to provide for the vertical stability required.

DETAILED DESCRIPTION OF A MODIFIED EMBODIMENT

Referring now to FIGS. **3, 4, 6** and **7,** a modified embodiment of an improved railway car **50** is disclosed. The railway car **50** comprises at opposite ends thereof single axle trucks **51,** only one of which is shown since the car is identical at opposite ends thereof. Each truck **51** comprises a single axle **52** being supported on conventional wheels. The car **50** also is of articulated design and is provided centrally with a double axle truck **53** including axles **54** which support, as best shown in FIG. **6,** a truck bolster **55** having a conventional center plate **56** supported thereon. The truck **53** also includes outer or side bearings **57** of conventional design which are carried by the bolster **55.** The articulated car **50** comprises two sections of truss or framing structures **58** each of which includes a lower longitudinal beam **59** and an upper beam **60.** Each lower beam **59** is provided at its longitudinally outermost ends with a diagonal beam portion **61.** The diagonal beam portions **61** provided at the outermost opposite ends of the sections **58** are connected to horizontally extending stabilizing members **62** which have supported thereon stub center sills **63.** As best shown in FIG. **7,** the stub center sills **63** include side plates **64** connected to a top plate **65** and a bottom plate **66.** The stabilizing members **62** are of heavy structural fabrication and are provided with conventional depending pedestals **67** suitably provided with slots **68** within which springs **69** are suitably secured. The axles **52,** including conventional bearing portions, are vertically movable in the slots **68** and are cushioned therein by means of the springs **69** in a manner which is well known in the art.

Each of the truss or framing structure sections **58** include vertical end frame members **70** which are suitably secured to the lower beam **59** and are suitably connected to the upper beam **60.** Intermediate vertical frame members **71** are also similarly connected and are further connected to horizontally extending frame members **72** thus providing a suitable rigid type truss structure. The vertical frame members **70** also are connected at their lower ends, at the center portion of the car **50,** to vertical webs **73** and **73'** as shown in FIG. **3.** The web **73** is provided with vertically spaced horizontally extending yoke members **74** which support a vertical pivot pin **75,** as best shown in FIG. **6.** The vertical web **73'** of the adjacent sections **58** is provided with horizontally spaced vertically extending yoke elements **76** which are provided with aligned bores **77** through which the pin **75** extends. A horizontal pivot pin **78** is supported on the yoke element **76** and extends through a bore **78'** provided in the pivot pin **75.**

As best shown in FIG. **6,** the relationship of the yokes **74** and **76** and their associated pivot pins is such that full articulation of the sections **58** is provided. Such articulation is conventional in the art and further need not be detailed for the present invention.

The web **73** also has connected thereto in the area of the lower yoke element **74,** a transverse stabilizing member **79** as best shown in FIG. **6.** The stabilizing member **79** includes a suitable downwardly extending center plate **80** adapted to conventionally cooperate with the center plate **56** supported on the bolster **55** and for this purpose a suitable pivot pin **81** is provided. The stabilizing member **79** also is provided at its lower surface with bearing pads **82** adapted to cooperate with the outer bearings **57.** The features of the modification are the same as those enumerated with respect to the first embodiment disclosed hereinabove. In both cars the structure of the upstanding longitudinally extending truss performs the same function and has the advantages which are indicated. The invention thus can be utilized in a single-section railway car as indicated in FIG. **1** or two or more articulations may be provided, a two-section car being disclosed in FIGS. **3, 4, 6** and **7.**

DETAILED DESCRIPTION OF ANOTHER MODIFIED EMBODIMENT

In FIG. **8,** another modified application of the truss structure invention is provided. In this case a highway trailer is generally designated by the reference character **90** which is pulled by a conventional tractor **91** including a body **92** supported on ground wheels **93.** The tractor **91** has supported on the said body **92** and conventional fifth wheel **94** having connected thereto a fifth wheel plate **95.** The kingpin **96** of conventional construction is secured on the plate **95** and is rigidly connected to a truss-type frame **97** of similar construction as that shown in the aforementioned embodiments. The truss type of frame **97** includes a lower beam **98** which has connected thereto a spacer plate **99** to which the kingpin **96** is also connected. The frame **97** also includes an upper beam **100** and an intermediate beam **101,** the said upper and lower beams **98** and **100** being

respectively connected by vertical end beams **102** and **103.** The trailer **90** is supported on a conventional type of wheel suspension generally designated at **104** and includes suitable wheels **105** connected to the wheel suspension **104** by conventional spring devices. The wheel suspension **104** also includes a pair of horizontally extending frame members **106** which are connected to two vertically extending plates **107** by means of transverse beam members **108** connected to the frame members **106** at longitudinally spaced locations to provide a rigid construction. As best shown in FIG. **9,** the vertical plates **107** are provided with openings **109** within which pins **110** are secured which suitably support a pair of track members **111** provided with a plurality of longitudinally spaced transversely aligned holes **112.** The track members **111** are connected to the lower beam **98** and serve to secure the truss structure **97** on the wheel suspension **104.** The wheel suspension **104** may be adjusted longitudinally on the track members **111** in conventional fashion by the removal and reinsertion of the pins **110.** The longitudinal adjustment of the suspension is provided by means of the holes **112** which are placed in alignment with the holes **109** so that the pins **110** may be connected therethrough.

DETAILED DESCRIPTION OF ANOTHER MODIFICATION

Referring now particularly to FIGS. **10** and **11,** a cross-section through a portion of an airplane fuselage or hull, which is designated at **120,** is disclosed. The fuselage or hull **120** has provided therein a truss structure **121** of similar construction as previously described. The truss structure **121** comprises an upper beam **122** and a lower beam **123** suitably interconnected by vertical beams **124.** The truss structure **121** is also provided with a plurality of horizontal intermediate beams **125** in turn suitably connected to the vertical beams **124.** The truss structure **121** provides the main support for the fuselage **120** and a skin or envelope **126** is supported on the truss structure **121** by suitable stringers or transversely extending brackets or gussets **131** suitably connected to the beams **122** and **123.** The skin or envelope **126** may also be provided with suitable openings **127** which may be closed by means of doors (not shown). A suitable wing structure **128** is shown schematically and same is rigidly attached to the truss structure **121** in a manner which may be well-known to anyone skilled in the art. Further, a suitable empennage or tail assembly is connected to the truss structure **121.**

The truss structure **121** provides the primary structural support for the airplane fuselage **120,** and vehicles **129,** such as automobiles, are connected directly thereto and suspended therefrom by means of brackets generally indicated at **130.** A conventional retractable landing gear structure **132** is suitably connected to the wing structure **128** as indicated in FIG. **11.**

Referring now to FIGS. **12, 13** and **14,** another modified trailer arrangement is disclosed which embodies the truss structure concept of the present invention. A conventional tractor **135** is schematically disclosed and includes a fifth wheel plate **136.** A pair of trailers are disclosed and are designated at **137,** each including a truss structure generally designated at **138.** The truss structures **138** of each trailer **137** include an upper longitudinal beam **139** and a lower longitudinal beam **140** connected at opposite ends by vertical end beam members **141.** A central vertical beam **142** also connects the beams **140** and **141.** A stabilizing member or tongue **143** is provided at the front of each trailer and includes a kingpin **144** which in the case of the lead trailer is connected to the fifth wheel plate **136** in conventional fashion. The truss structure **138,** and particularly the lower longitudinal beam **140,** are connected to a rear stabilizing member **145** supported on a suitable wheel and axle suspension **146.** A U-shaped guard **147** is positioned on opposite sides of the truss structure **138** to protect the cargo carried thereon. Side rails **148** connected to the U-shaped guards **147** are also provided for this purpose. The trailers **137** are shown carrying vehicles **149** which are suitably connected by means of brackets **150,** in the case of the lowermost vehicles **149,** to the central beam **142.** In the case of the upper vehicles **149,** the brackets **150,** as shown in FIG. **14,** connect the vehicles to the upper beam **139.** Similarly, brackets may connect the upper vehicles **149** to the vertical end beams **141.** The brackets may be conventional securing brackets which removably secure the underframe of a conventional automobile to the truss structure.

FIGS. **12** and **13** also show a dolly construction having a body **152** provided with a conventional landing gear **153.** The body **152** also supports a conventional fifth wheel plate **154** and said body is supported by a suitable axle and wheel suspension **155.** The stabilizing member **145** includes a pivot bracket **156,** in turn connected to a pivot bracket **157** by means of a removable pivot pin **158.** As shown in FIG. **12,** the rearmost trailer **137** may have its kingpin **144** in engagement in conventional fashion with the fifth wheel plate **154** so as to provide for a train of two or more trailers. In the present modification, the truss structures again are the primary structural components of the trailer and also provide the primary means of suspension of the cargo.

In the various embodiments shown, the truss structures provide the primary or basic structural member of the vehicle and is also the primary member providing support for the cargo which is to be carried thereon. In the railway adaptation the truss structure is provided at its lower ends with the horizontal members which in turn are carried by the trucks of the railway car and provide vertical stability. In the highway trailer modification shown in FIG. **8,** the truss structure is supported at its front by means of the fifth wheel plate **95** which thus provides the horizontal or transverse stabilizing means for the truss structure **97.** Likewise, the rear of the truss structure **97** is provided with transverse stabilizing means in the form of the vertical plates **107** which are adjustably and releasably connected to the lower beams **98.**

In the aircraft construction shown in FIG. **11,** the truss structure supports the skin or fuselage and also, the wings and empennage which are connected to the truss structure provide the vertical stability for the aircraft. Thus the truss structure in each instance is provided to act as a main structural member and also to carry the cargo directly suspended thereon.

In the embodiment shown in FIG. **8,** the truss structure is disclosed as being removable relative to the fifth wheel plate **94** and the suspension **104** so that the truss including the cargo can be removed from the vehicles and therefore the vehicles can be attached to the truss structure either within or outside the factory in which the vehicles are manufactured wherein the truss struc-

ture can then be suitably handled and releasably attached to the wheel structure disclosed.

In the railway adaptation the truss structures also can easily be removed from the wheel trucks by merely raising the truss structures from the trucks. In conventional railway car manufacture, the cars are lowered onto the bolsters of the trucks and may be likewise removed by merely lifting the cars from the said bolster structures of the trucks. Thus, in each of the instances disclosed in FIGS. **1** through **8**, the truss structures are removable. Similarly, in the aircraft structure FIG. **11**, the truss structure can be made removable relative to the aircraft wing and tail or empennage assembly but when attached thereto, provides the main structural support.

What is claimed is:

1. In an aircraft, a cargo carrying fuselage assembly comprising:

frame means including upper and lower beam members, each having a substantially horizontally disposed longitudinal axis and being mutually aligned in a vertical plane;

a fuselage skin disposed about said frame means and supported thereby to form an interior chamber, with said vertically aligned upper and lower beam members dividing the interior chamber into two parts;

said frame means further including beam means interconnecting said upper and lower beam members and aligned therewith in said vertical plane;

said beam means including a plurality of substantially vertical beams connected to said upper and lower beam members and at least one substantially horizontal beam supported by said substantially vertical beams; and

bracket means supported by said at least one substantially horizontal beam and extending therefrom for suspending cargo.

2. The invention according to claim **1**; and

said bracket means comprising a plurality of brackets extending from said at least one substantially horizontal beam to either side of said vertical plane to suspend cargo in both parts of said interior chamber.

3. The invention according to claim **1**, and

said frame means dividing said interior chamber into two equal parts.

4. The invention according to claim **1**; and

a plurality of brackets extending transversely from said upper and lower beam members and supporting said fuselage skin.

5. A cargo transporting aircraft comprising:

frame means including upper and lower beam members, each having a substantially horizontally disposed longitudinal axis and being mutually aligned in a vertical plane;

wing structure means supported by said frame means and extending transverse to said vertical plane;

tail assembly means supported by said frame means;

a fuselage skin supported by said frame means to define an interior chamber with said vertical plane dividing the interior chamber into two parts;

said frame means including a plurality of substantially vertical beam means interconnecting said upper and lower beam members and a plurality of beams, each supported by a pair of said substantially vertical beam means in said vertical plane; and

a plurality of cargo suspending brackets extending from said plurality of beams.

6. The invention according to claim **5**, and

said plurality of beams being supported by said substantially vertical beam means such that their longitudinal axes are substantially horizontal.

7. The invention according to claim **5**; and

said cargo suspending brackets extending from said plurality of beams into both parts of said interior chamber.

* * * * *