Feb. 27, 1923. 1,447,059.

R. S. BENSON.

WIRE IMBEDDING TOOL.

FILED OCT. 12, 1921.

Fig. 1.

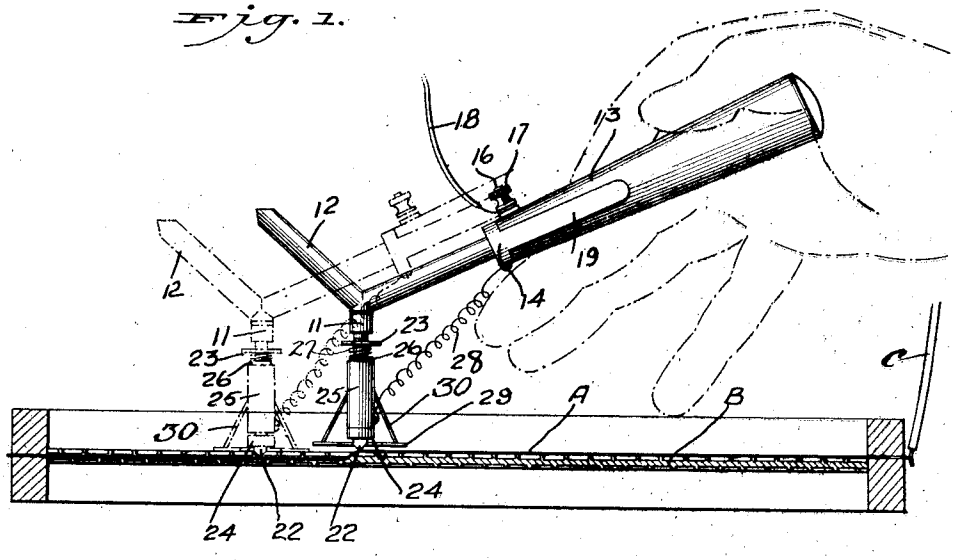

Fig. 2.

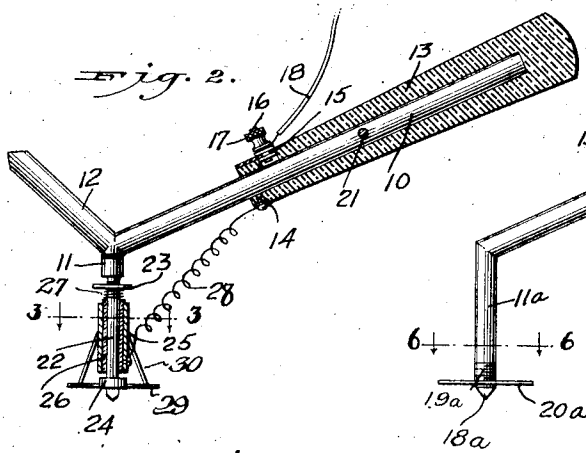

Fig. 5.

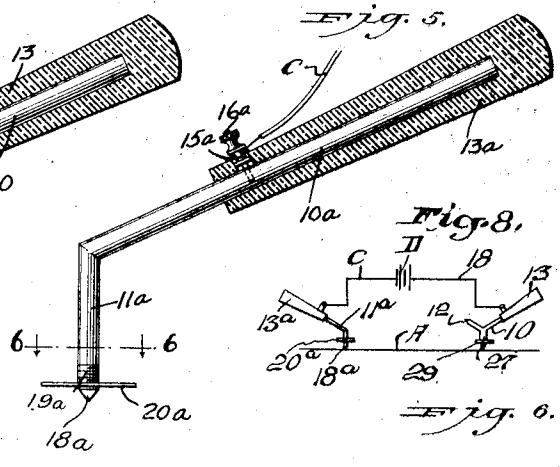

Fig. 8.

Fig. 6.

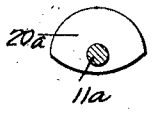

Fig. 3.

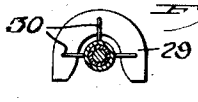

Fig. 7.

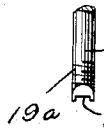

Fig. 4.

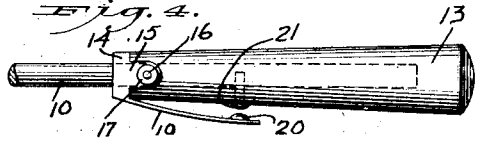

WITNESSES

W. E. Jones

Hugh H. Alt

INVENTOR

ROBERT S. BENSON

BY Munn & Co

ATTORNEYS

Patented Feb. 27, 1923. 1,447,059

UNITED STATES PATENT OFFICE.

ROBERT SANFORD BENSON, OF WEST PARIS, MAINE.

WIRE-EMBEDDING TOOL.

Application filed October 12, 1921. Serial No. 507,396.

To all whom it may concern:

Be it known that I, ROBERT S. BENSON, a citizen of the United States, and a resident of West Paris, in the county of Oxford and State of Maine, have invented a new and Improved Wire-Embedding Tool, of which the following is a full, clear, and exact description.

This invention has relation to foundation tools for bee keepers and relates more particularly to an electric wire imbedder.

The invention contemplates a simple and effective tool for embedding wire in a foundation in a simple and expeditious manner.

As a further object the invention contemplates a wire embedding tool which may be used in pairs or singly, and which includes means for insuring an even embedding.

The invention further contemplates a tool of the character described which is extremely simple in its construction, inexpensive to manufacture, and which is thoroughly reliable and highly efficient in its purpose.

With the above recited and other objects in view, the invention resides in the novel construction, set forth in the following specification, particularly pointed out in the appended claims and illustrated in the accompanying drawings, it being understood that the right is reserved to embodiments other than those actually illustrated herein to the full extent indicated by the general meaning of the terms in which the claims are expressed and by variations in the phraseology of the same.

In the drawings;

Figure 1 is a side elevation of a tool illustrating the manner of using the same.

Figure 2 is a similar view parts being shown in section to disclose the underlying structure.

Figure 3 is a detail sectional view taken approximately on the line 3—3 of Figure 2.

Figure 4 is a fragmentary plan view.

Figure 5 is a side elevation of a complementary tool, parts being shown in section.

Figure 6 is a sectional plan view taken approximately on the line 6—6 of Figure 5.

Figure 7 is a detail fragmentary elevation.

Fig. 8 is a diagrammatic view illustrating a further method of using the embedding device.

Referring to Figures 1, 2, 3 and 4 of the drawings, relating to the preferred form of the invention, the tool consists of a shank 10 provided at its free extremity with integrally formed angular extensions 11 and 12, said shank and extensions being preferably constructed of metal or any other suitable material which is a conductor of electricity. The opposite end of the shank 10 has mounted thereon a handle 13 of fiber, porcelain, wood, or any other suitable material which is a non-conductor of electricity. The inner end of the handle 13 has mounted thereon a metallic ring 14 provided with a rearwardly extending lug 15 apertured to receive a binding post 16 upon which a binding nut 17 is mounted for the purpose of attaching the terminal of a conduit wire 18 to the binding post. The ring 14 is further provided with a rearwardly extending spring arm 19 carrying on its inner side a contact member 20 which is designed to coact with a contact 21 mounted on the handle and extending therethrough and into the shank 10. The arm 19 normally operates to hold the contact member 20 out of engagement with the contact member 21 and is designed to act as a switch when manually depressed to bring the contact members into engagement. The angularly disposed extension 11 is provided with a reduced pointed extremity 22 threaded at its juncture therewith, to receive an adjusting nut 23 constituting a shoulder. A second shoulder 24 is located adjacent the free end of the extremity 22, and a metallic sleeve 25 having a bushing 26 of insulating material, is provided on the extremity 22 for sliding movement, a coiled contractile spring 27 being interposed between the bushing and the shoulder 23 for normally effecting a contact of the metallic sleeve 25 with the shoulder 24. The metallic sleeve 25 is connected to the ring 14 by a conduit wire 28. A substantially U-shaped guard 29 preferably formed of insulating material, is supported from the sleeve 25 by the spider-arms 30, said guard being normally located adjacent the shoulder 24, at the free end of the extremity 22.

In use and operation of the tool, the wire A, to be embedded in the foundation B, is connected at one extremity with the terminal of a conduit wire C leading to a battery or other source of electrical energy, from

the opposite pole of which the conduit wire 18 extends, and is connected to the binding post 16. The operator grasps the handle 13 of the tool in the manner illustrated in Figure 1, and brings the pointed extremity 22 of the extension 11 into contact with the wire A. In this position the extension 11 and extremity 22 are arranged vertically, and depending from the shank, the spring 27 operating to hold the sleeve 25 in contact with the shoulder 24 thereby completing the circuit from the source of supply through the wire 18, through the binding post 16, the ring 14, the conduit wire 28, sleeve 25, shoulder 24, wire A, wire C, and back to the source of supply. When the wire A becomes heated the same will melt its way into the foundation B, until the guard 29 contacts with the upper surface of the foundation sufficiently to separate the head 25 from the shoulder 24 against the action of the spring 27. This serves to automatically break the circuit, and thereby constitutes a depth gage to effect a uniform embedding of the wire A in its foundation. The nut 23 constitutes a means for obtaining various adjustments of the guard 28, to vary the depth at which the gage will be brought into operation for breaking the circuit.

Another method of embedding the wire A is illustrated in Fig. 8, in which instance the wire C is disconnected from the end of the wire B and is brought into movable contact with the wire A whereby the tool heretofore described may cooperate therewith to heat and imbed short sections of the wire A. As specifically illustrated the free terminal of the wire C which leads from one pole of the battery D is connected with a second tool which is illustrated in Figs. 5, 6 and 7.

Another method of embedding the wire A is illustrated in Fig. 8, in which instance the wire C is disconnected from the end of the wire B and is brought into movable contact with the wire A whereby the tool heretofore described may cooperate therewith to heat and imbed short sections of the wire A. As specifically illustrated the free terminal of the wire C which leads from one pole of the battery D is connected with a second tool which is illustrated in Figs. 5, 6 and 7. The tool is provided with a binding post 15^a extending through one side of the handle, and in electrical communication with the shank 10^a. The binding post has mounted on its outer extremity, a binding nut 16^a, which coacts with the terminal of a conduit wire C, for clamping the same to the binding post. The free extremity of the extension 11^a is provided with a bifurcated point 18^a, and is threaded at 19^a to receive and adjustably support thereon, a depth gage plate 20^a. The bifurcated point is designed for the purpose of pulling the wire, to tighten it if the same should be loose. Where the second tool illustrated in Figure 5 is employed, in lieu of attaching the wire C to the end of the wire A, the tools are respectively held in each hand of the operator, with their points in contact with the wire A are progressively moved over short sections of said wire A to heat and imbed the same. The purpose of providing the extension 12 in the first mentioned tool is to admit of using the tool in corners, or close to the edge of the frame where the guard member would interfere with the same. When the extension 12 of the tool is being used, the circuit is completed through the arm 19 and contact members 20 and 21 by manually depressing the arm and releasing the same when the desired depth is reached. The threaded mounting of the depth gage plate 20^a on the extremity 11^a permits of an adjustment of the same thereon for obtaining various depths when the tool is used.

Having thus described my invention, what I claim is:

1. A wire embedding tool comprising a conductor shank having an insulated handle, a conduit wire attached to said handle and having connection with a source of supply, and means carried by the opposite extremity of the shank for automatically breaking the circuit upon embedding of the wire a predetermined depth.

2. A wire embedding tool comprising a shank constituting a conductor element, an insulated handle mounted on one end of said shank, an extension on the opposite end thereof constituting a contact member, a conduit wire leading from a source of supply attached to said handle, and means carried by the free extremity of the extension for automatically breaking the circuit upon embedding the wire a predetermined depth.

3. A wire embedding tool comprising a shank constituting a conductor element, an insulated handle mounted on one end of said shank, an extension at the opposite end thereof, a conduit wire leading from a source of supply to said shank, and an adjustable depth gage mounted on the free extremity of the extension for automatically breaking the circuit to limit the depth of the embedding action.

4. A wire embedding tool comprising a shank constituting a conductor element having separate contact extremities at one end thereof and an insulated handle at its opposite end, a conductor from the source of electrical energy attached to the handle, means on the handle for manually establishing electrical communication between the conductor and one of the contact extremities, and means on the opposite contact extremity having permanent connection with the conductor for normally establishing communication between said latter extremity and the conductor, said means being automatically

operable to break the circuit when the wire to be imbedded reaches a predetermined depth.

5. A wire embedding tool comprising a shank constituting a conductor element having separate contact extremities at one end thereof and an insulated handle at its opposite end, a conductor from the source of electrical energy attached to the handle, means on the handle for manually establishing electrical communication between the conductor and one of the contact extremities, and means on the opposite contact extremity having permanent connection with the conductor for normally establishing communication between said latter extremity and the conductor, said means being automatically operable to break the circuit when the wire to be imbedded reaches a predetermined depth, and adjustable means on the latter extremity adapted to coact with said means for regulating the same to vary the depth of the embedding action.

6. A wire embedding tool comprising a shank constituting a conductor element provided with oppositely disposed angular extensions at one extremity, an insulated handle mounted on the opposite extremity, a conductor member mounted on the handle having connection with a source of supply, manual means for electrically connecting the conductor member with one of the angular extensions, and means carried by the opposite extension having connection with the conductor member and serving to normally connect said conductor member with the latter extension, said means adapted to coact with the foundation to break the circuit when the wire is imbedded a predetermined depth.

7. A wire embedding tool comprising a shank constituting a conductor element provided with oppositely disposed angular extensions at one extremity, an insulated handle mounted on the opposite extremity, a conductor member mounted on the handle having connection with a source of supply, manual means for electrically connecting the conductor member with one of the angular extensions, means carried by the opposite extension having connection with the conductor member and serving to normally connect said conductor member with the latter extension, said means adapted to coact with the foundation to break the circuit when the wire is imbedded a predetermined depth, and means coacting with the first means for regulating the movement of the same to vary the movement of the same when increasing or decreasing the embedding action.

ROBERT SANFORD BENSON.