Oct. 3, 1967 T. I. VERMEIREN 3,345,594

MAGNETIC DEVICE FOR TREATING A LIQUID

Filed Oct. 25, 1965

Fig. 1

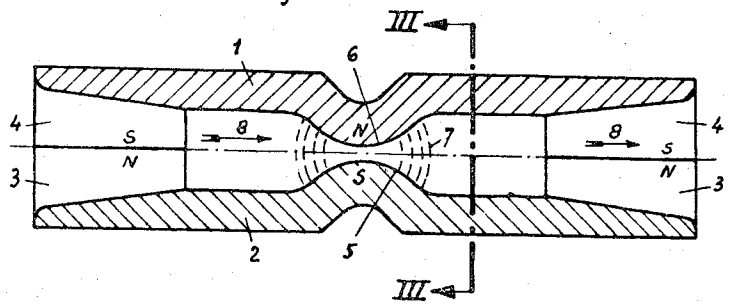


Fig. 2

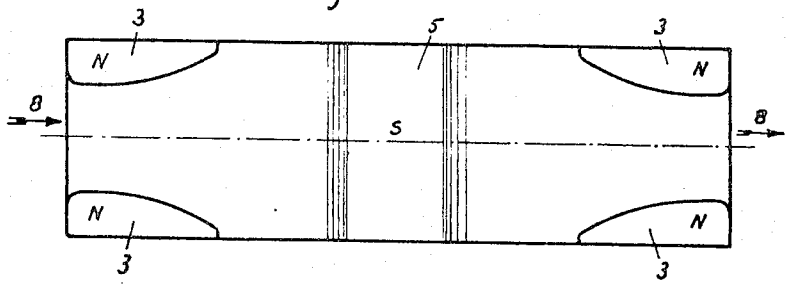


Fig. 3

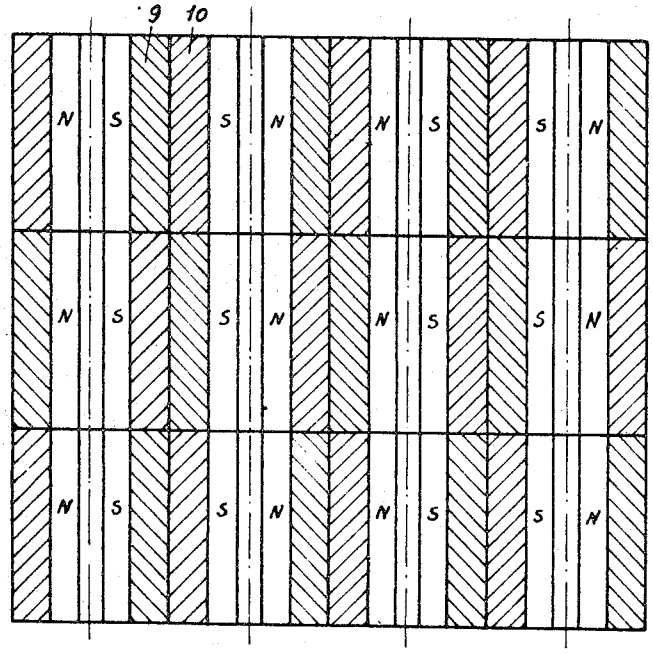


Inventor

Théophile I. Vermeiren

Stevens, Davis, Miller & Mosher

Attorneys

United States Patent Office 3,345,594 Patented Oct. 3, 1967



3,345,594

# MAGNETIC DEVICE FOR TREATING A LIQUID

Theophile I. Vermeiren, 48 Verbovenlei, Deurne-Zuid, Belgium

Filed Oct. 25, 1965, Ser. No. 505,168
Claims priority, application Belgium, Oct. 12, 1965, 18,949, Patent 670,809
2 Claims. (Cl. 335—306)

This invention relates to a device for treating a liquid by means of the lines of force of a magnetic field provided with at least one passage for the liquid to be treated and means producing over part of said passage a magnetic field the lines of force of which are substantially at right angle to the lengthwise direction of the passage.

Such devices are used for treating liquids that cause calcareous scale formations as well as for generally reducing the corrosive working of liquids.

The magnetic conditioning of liquids is moreover already known, notably according to the methods applied by means of devices designed by the applicant and among others by means of devices according to Belgian Patents 460,560, 486,497 and 492,580.

However, in the known devices, the magnetic fields are generated either by coils supplied with alternating or direct current, or by permanent magnets with a more or less usual design, for instance by straight, cylindrical or semi-cylindrical magnets.

The present invention, to the contrary, pertains in the first place to a device with a completely new concept that brings a saving in material and labour, while insuring better results.

For this purpose, the means generating the magnetic field are comprised of two magnets that extend in parallel relationship along the lengthwise direction of the passage, which are provided in the middle thereof with projections facing one another and forming poles of opposite names and at both ends thereof poles which, for the same magnet, are of a name opposite to the one of the projection of said magnet.

In an advantageous embodiment of the invention, the magnets are mutually engaged by lugs that form the end poles.

The invention does not only pertain to the above-defined device, but also to each magnet designed for such a device.

Other details and features of the invention will stand out from the description given below by way of non-limitative example, of an embodiment of a device for treating a liquid and of a magnet for such a device, with reference to the accompanying drawings, in which:

FIGURE 1 is a lengthwise vertical section of a pair of magnets pertaining to device for treating a liquid according to the invention.

FIGURE 2 is a plan view of one of the magnets shown in FIGURE 1.

FIGURE 3 is a section through a series of magnet pairs according to the preceding figures, said magnets being shown as they are located in a device for treating a liquid according to the invention; the section is made along line III—III of FIGURE 1.

In the various figures, the same reference numerals pertain to similar elements.

A device for treating liquids by means of lines of force of magnetic fields, for minimizing the corrosive working of the liquid and for preventing said liquid from causing calcareous scale formations, may be comprised of a pair of permanent magnets of the type illustrated by the pair of magnets shown in FIGURE 1. As described below, a device may comprise a plurality of magnet pairs, as shown in FIGURE 3.

Each one of the pair of magnets shown in FIGURE 1 is comprised of a magnetic body that extends substantially along a lengthwise direction in parallel relationship with the liquid flow.



The upper magnet bears reference numeral **1**, while the lower magnet bears reference numeral **2**. Each magnet has a pole of like name at both ends thereof and comprises intermediate said ends a projecting part which forms a pole of opposite name. The lower magnet **2** has a north pole at both ends thereof and a south pole in the center as a projecting part. The upper magnet **1** has a south pole at both ends thereof and a north pole in the center as a projecting part. The end poles of the magnets **1** and **2** are of different names, in such a way that the bodies **1** and **2** are pushed to one another by magnetic attraction. This magnetic attraction is caused not only by the magnet ends, but also by the projections, as each end of a magnet engages one end of the other magnet which forms a pole of opposite name, and as the projection of a magnet faces a projection of the other magnet that forms a pole of opposite name.

The ends are shaped as lugs **3** and **4**. Said lugs engage one another through plane surfaces. The height of the lugs **3** and **4** is higher than the height of projections **5** and **6**, in such a way that when the magnets are located adjacent to one another, with the lugs **3** and **4** engaged, there remains a free passage between the projections **5** and **6**. The spacing between the projections **5** and **6** is however substantially smaller than the spacing between the magnets **1** and **2** in the other location, with the exception however of the engagement surfaces of the lugs **3** and **4**. However, between the pairs of lugs **3–4** a substantial passage remains free for the liquid.

Of course, the lines of force of the magnetic fields are substantially entirely inside the magnets, to the exception of the short path these lines must follow between the projections **5** and **6**. The air gap in this location is thus very narrow, in such a way that the magnetic flux may be strongly condensed in this air gap. The magnetic field is thus used at about 100%, which means a win of about 30% in magnetic material relative to the usual embodiments.

At the location of the air gap, that is between the projections **5** and **6**, the lines of force of the magnetic field shown in **7** are substantially at right angle to the liquid threads which are in parallel relationship with the arrows **8** showing the flow direction of the liquid.

It is to be noted that actually a pair of magnets such as shown in FIGURE 1 or a series of identical pairs is located inside a pipe surrounding the magnets located one against the others. This pipe is only used for retaining the magnets in their location and it thus has no purpose as regards the strength of the magnetic fields. This pipe has not been shown in the figures. It is preferably made of non ferromagnetic material.

The liquid passing through the device along the direction of the arrows **8** finds a passage with a large enough cross-section between the pairs of lugs **3–4**; this passage remains large enough between the magnets **1** and **2** behind the pairs of lugs and has a much more limited area between the projections **5** and **6**. As the pair of magnets is symmetrical relative to the cross-wise plane through the projections **5–6**, the passage of the liquid which passed between the projections **5** and **6** has again a much larger area, in such a way that the complete passageway between both magnets is shaped as a venturi, the smallest spacing being found at the location of the air gap, where the magnetic field is the strongest, that is between the projections **5** and **6**. The liquid speed is thus highest in the air gap, which is extremely advantageous, as the efficiency of the magnetic conditioning depends on the one hand on the field strength and on the other hand on the liquid speed. The small flow area at the location

of the air gap results in a high speed and the small spacing between the two projections forming poles of opposite name causes a high concentrating of magnetic flux. The venturi shape minimizes the hydraulic resistance.

Due to the very high flow speed, the impurities, for instance the iron oxides, are taken along by the liquid and they are thus somewhat blown out of the apparatus, in such a way that there is less danger of choking the device inside the magnetic gap.

All of these advantageously allow the use of usual magnets for conditioning various liquids, which previously, for technical reasons, it was necessary to select the magnets with respect to the required magnetic field, which is itself selected according to the electrolytic formulation of the liquid to be treated.

FIGURE 3 shows more particularly how it is possible to make a battery of magnet pairs; each pair of magnets fulfills the same purpose as described above. It results more particularly from FIGURE 3 that the magnets which are located back to back and which belong to two different pairs, for example the magnets **9** and **10** have poles of like name at the ends thereof and thus also in the center. Thus the magnets **9** and **10** have north pole at the ends thereof and a south pole in the center. The magnet pairs being thus arranged back to back with equal polarities, the magnetic flux is directed more strongly towards the air gaps, as it can not escape anywhere and it is attracted in the air gap.

The invention is in no way limited to the above embodiments and many changes may be brought therein without departing from the scope of the invention as defined by the appended claims.



Thus, for instance, while the magnets described above are of rectangular-shaped section, the magnets according to the invention may have any geometrical shape whatsoever. Preferably, this shape must allow a perfect assembly as described about FIGURE 3, but this condition is not necessary for magnets which are located by individual pair inside a tube.

I claim:

**1.** Device for treating a liquid by means of lines of force of a magnetic field with at least one passage for the liquid to be treated and means producing on part of said passage a magnetic field the lines of force of which are substantially at right angle to lengthwise direction of the passageway, in which the means generating the magnetic field are comprised of two magnets that extend in parallel relationship with the lengthwise direction of the passage while being provided in the center thereof with projections facing one another and forming poles of opposite name and at both ends thereof with poles which, for one and the same magnet, are of opposite name relative to the pole of the projection of this magnet.

**2.** Device as claimed in claim **1**, in which the magnets are mutually engaged through lugs comprising the end poles.

**References Cited**

UNITED STATES PATENTS

| | | | |
|---|---|---|---|
| 3,062,376 | 11/1962 | Davis | 210—222 |
| 3,136,720 | 6/1964 | Baermann | 210—222 |


BERNARD A. GILHEANY, *Primary Examiner.*

G. HARRIS, JR., *Assistant Examiner.*